苏州为山之环境技术有限公司
Suzhou Weishans Climate Technologies Co.,Ltd

联系我们 / Contact Us
公司名称: 苏州为山之环境技术有限公司 Suzhou Weishans Climate Technologies Co.,Ltd
公司官网 / Web:www.weishans.com
地址：江苏省苏州市相城区黄埭镇咏春科技园
Address：Yongchun Science and Technology Park, Huangdai Town, Xiangcheng District, Suzhou City, Jiangsu Province

免责声明
技术数据在印刷前已经校对过，印刷之后有再更新的可能。如有对某一参数确认的需求，请联系苏州为山之环境技术有限公司。为山之对参数中可能存在的差错概不承担任何责任，为山之保留自行改变其产品而不预先通知的权利。

Disclaimer
Our technical data have been checked before printing, but it is possible for data to be updated after printing. If you need to confirm a certain parameter, please contact Suzhou Weishans Climate Technology Co., Ltd. Weishans will not take any responsibilities for any possible errors in the parameters and reserve the right to change its products without prior notice.

Rev:202609

WEISHANS
Climate Technologies

WH 系列

R142b/R245fa/R1233zd

超高温应用涡旋压缩机

ULTRA HIGH TEMP. SCROLL COMPRESSOR

苏州为山之环境技术有限公司
Suzhou Weishans Climate Technologies Co.,Ltd

苏州为山之环境技术有限公司

成立于 2018 年 6 月，是一家专注研发、生产节能环保型涡旋压缩机的创新型高新技术企业。

公司深耕涡旋压缩机核心技术研发，已实现关键技术重大突破，产品广泛适用于工业制冷、商用热水、工业蒸汽、农业烘干、制冷工程、精密空调、轨道交通制冷、转轮除湿、工业余热回收等众多领域。

企业配备先进自动化生产线及高精度检测、加工设备，依托创新生产工艺流程，产品规格覆盖 2 匹至 25 匹，先后通过 CCC、CE、CB、ROHS & REACH、ISO 9001 等多项国内外权威认证。

公司高度重视知识产权布局与保护，拥有多项自主专利技术，先后获评江苏省民营科技企业、国家级高新技术企业等荣誉资质。

面向未来，公司将持续加大科研研发投入，专注为客户提供绿色环保热泵及冷冻压缩机整体解决方案，以降低全球碳排放为企业使命，聚力赋能节能环保产业发展，共建绿色生态家园。

Suzhou Weishans Climate Technology Co., Ltd

Established in June 2018, the company is an innovative high-tech enterprise dedicated to the R&D and manufacturing of energy-efficient and eco-friendly scroll compressors.

The company is deeply committed to the R&D of core scroll compressor technologies, having achieved significant breakthroughs in key technical areas. Its products are widely applicable across numerous fields, including industrial refrigeration, commercial hot water systems, industrial steam generation, agricultural drying, refrigeration engineering, precision air conditioning, rail transit cooling, desiccant dehumidification, and industrial waste heat recovery.

Equipped with advanced automated production lines as well as high-precision testing and processing equipment, and leveraging innovative manufacturing processes, the company offers a product range spanning specifications from 2 to 25 horsepower. Its products have successfully obtained numerous authoritative domestic and international certifications, including CCC, CE, CB, RoHS & REACH, and ISO 9001.

The company places great emphasis on intellectual property strategy and protection; it holds numerous proprietary patented technologies and has successively been recognized with prestigious credentials, such as "Private Scientific and Technological Enterprise of Jiangsu Province" and "National High-tech Enterprise."

Looking toward the future, the company will continue to increase its investment in scientific research and development. It remains focused on providing customers with comprehensive solutions for green, eco-friendly heat pumps and refrigeration compressors. With the corporate mission of reducing global carbon emissions, the company is dedicated to empowering the growth of the energy-saving and environmental protection industry, working together to build a green and sustainable ecological home.

CONTENTS目录

命名规则 *Nomenclature*	*01*
应用范围 *Application Range*	*02*
性能参数 *Specification*	*03*
制热量 *Heating Capacity*	*07*
R142b	*07*
R245fa	*17*
R1233zd	*27*
外形尺寸 *Dimension*	*37*
保护模块接线图 *Protection module wiring diagram*	*47*

命名规则
Nomenclature

压缩机标称能力代码
通常（不包括R410A喷气机型）
表示在60Hz，ARI工况下制冷量，
单位：Btu/Hr
仅R410A喷气增焓机型
表示在50Hz，-20/55℃工况下制热量，
单位：W

润滑方式代码
M-矿物油R22
E-32#POE/R404A/R407C
F-68#POE/R134等
P-32#POE/R410A
B-120#POE/
R142b/R245fa/R1233zd等
R-68#POE/R32

电源代码
P-380V 50Hz
T-380V 60Hz
J-220-240V 50Hz
D-460V-3 60Hz/380-420V-3 50Hz
V-220V-1 50Hz/208-230V-1 60Hz
5-200-220V-3 50Hz/200-230V-3 60Hz

连接代码
N-无视液镜；焊接口
G-有视液镜；焊接口
S-有视液镜；螺纹口

压缩机家族序列代码
R-空调
B-中温冷藏应用
W-热泵热水应用
F-低温冷冻应用
H-特种高温应用

能力系数代码
H*100
K*1000
M*10000

电机相数代码
T-三相
P-单相

冷却方式
N-无配置
V-喷气增焓
L-喷液
X-喷气+喷液

电机保护方式代码
F-内置保护器
W-外置保护器
X-无电机保护器

配置代码
1-标准配置
2-车载空调系列
3，4-客户特殊定制系列
X-配置可燃冷媒，如R290等

系列代码
W-为山系列

WH 160 KB - TFD - GN1

Series Code
W-Weishan Series

Motor Protection
F-Internal Protector
W-External Protector
X-None

Model Code
1-Standard Configuration
2-Automotive A/C Series
3,4-Customized Client Series
X-For flammable refrigerants,
Such as R290

Compressor Family Series
R-Air Conditioning
B-Medium Temperature Refrigeration
W-Heat Pump for Heating Water
F-Low Temperature Freezing
H- Special High Temperature

Capacity Multiplier
*H*100*
*K*1000*
*M*10000*

Motor Phase
T-Three Phase
P-Single Phase

Cooling Model
N-None
V-Vapor Injection
L-Liquid Injection
X-Vapor+Liquid Injection

Compressor Nominal Capability Code
Usually (eccluding R410A with EVI model)
ARI Operating at 60Hz, Unit:Btu/Hr
R410A with EVI :
Nominal Capabilityat 50Hz，-20/55℃,
Unit:W

Lubrication Oil
M-R22 Mineral Oil
E-32#POE/R404A/R407C
F-68#POE/R134,etc
P-32#POE/R410A
B-120#POE/
R142b/R245fa/R1233zd,etc
R-68#POE/R32

Power
P-380V 50Hz
T-380V 60Hz
J-220-240V-1 50Hz
D-460V-3 60Hz/380-420V-3 50Hz
V-220V-1 50Hz/208-230V-1 60Hz
5-200-220V-3 50Hz/200-230V-3 60Hz

Fitting Connection Code
N-None and Welding Joint
G-Sight Glasses and Welding Joint
S-Sight Glasses and Solenoid Joint

应用范围
Application Range

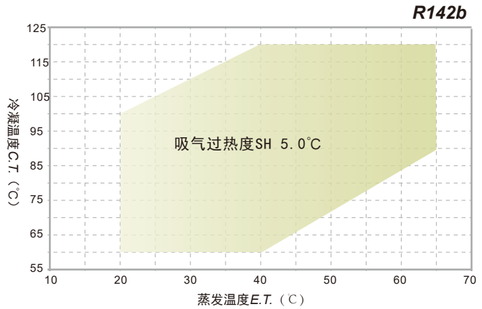

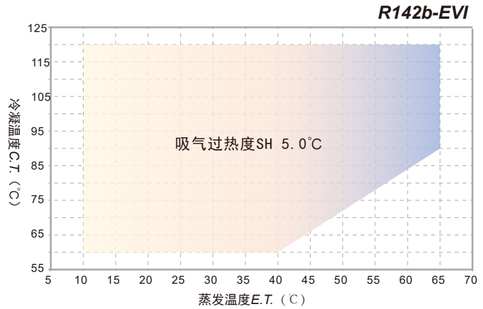

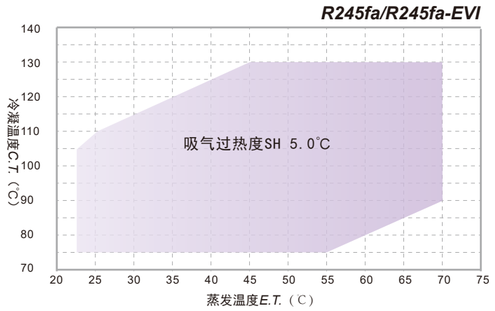

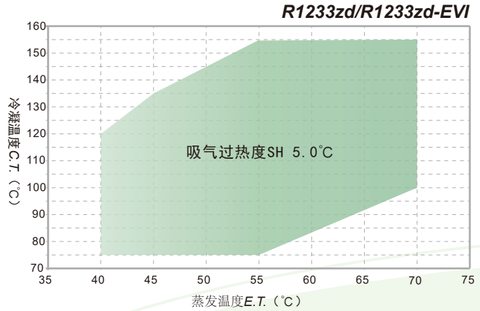

性能参数
Specification

型号 Model		WH70KB-TFD-GN1	WH120KB-TFD-GN1	WH160KB-TFD-GN1	WH190KB-TFD-GN1	WH240KB-TFD-GN1
电制Power Supply		380-420V/3~/50Hz or 460V/3~/60Hz				
名义功率(HP) Power in Horse Power		3	5	7	8	10
排量(cc/rev) Displacement		50.6	84.5	108.0	127.0	166.1
R142b	名义制热量(W) Nominal Heating Capacity	9811	16384	20941	24625	32206
	名义输入功率(W) Nominal Input Power	2457	4102	5269	6267	8253
	名义工况能效比(W/W) Nominal COP	3.99	3.99	3.97	3.93	3.90
	名义工况电流(A) Nominal RLA	4.70	7.90	9.90	12.20	15.40
	最大运行电流(MOC)(A)	6.70	13.90	16.40	18.60	26.70
R245fa	名义制热量(W) Nominal Heating Capacity	4955	8275	10576	12436	16265
	名义输入功率(W) Nominal Input Power	1831	3058	3909	4596	6011
	名义工况能效比(W/W) Nominal COP	2.71	2.71	2.71	2.71	2.71
	名义工况电流(A) Nominal RLA	4.50	6.00	8.00	9.60	12.30
	最大运行电流(MOC)(A)	7.80	9.70	12.30	16.50	17.80
R1233zd	名义制热量(W) Nominal Heating Capacity	4412	7367	9416	11072	14481
	名义输入功率(W) Nominal Input Power	1838	3069	3922	4612	6032
	名义工况能效比(W/W) Nominal COP	2.40	2.40	2.40	2.40	2.40
	名义工况电流(A) Nominal RLA	4.10	6.50	8.20	9.80	12.40
	最大运行电流(MOC)(A)	6.10	9.80	13.00	18.00	21.60
堵转电流(LRA)(A)		59.3	83.6	103.4	117	117
润滑油类型 Oil Type		POE				
润滑油初次充注量(L) Initial Charge Oil Volume		1.4	1.8		3.0	
润滑油重新充注量(L) Recharge Oil Volume		1.2	1.6		2.8	
重量(kg) Weight		28	38		66	

1. R142b 额定工况：蒸发45.0℃冷凝100.0℃过热5.0K过冷5.0K环温35.0℃.
   Rated Condition of R142b Refrigerant: E.T.45.0℃, C.T.100.0℃, S.H.5.0K, S.C.5.0K, A.T.35.0℃.
2. R245fa/R1233zd 额定工况：蒸发50.0℃冷凝120.0℃过热5.0K过冷5.0K环温35.0℃.
   Rated Condition of R245fa/R1233zd Refrigerant: E.T.50.0℃, C.T.120.0℃, S.H.5.0K, S.C.5.0K, A.T.35.0℃.

性能参数
Specification

型号 Model		WH280KB-TFD-GN1	WH360KB-TFD-GN1	WH470KB-TWD-GN1	WH600KB-TWD-GN1
电制Power Supply		380-420V/3~/50Hz or 460V/3~/60Hz			
名义功率(HP) Power in Horse Power		12	15	20	25
排量(cc/rev) Displacement		190.8	248.9	325.0	400.0
R142b	名义制热量(W) Nominal Heating Capacity	36995	48261	63016	77558
	名义输入功率(W) Nominal Input Power	9517	12502	16359	20324
	名义工况能效比(W/W) Nominal COP	3.89	3.86	3.85	3.82
	名义工况电流(A) Nominal RLA	17.90	23.30	33.60	40.20
	最大运行电流(MOC)(A)	29.80	33.50	51.60	61.80
R245fa	名义制热量(W) Nominal Heating Capacity	18684	24374	31826	39170
	名义输入功率(W) Nominal Input Power	6906	9008	11762	14477
	名义工况能效比(W/W) Nominal COP	2.71	2.71	2.71	2.71
	名义工况电流(A) Nominal RLA	12.80	17.70	26.60	31.50
	最大运行电流(MOC)(A)	21.10	29.20	40.90	52.00
R1233zd	名义制热量(W) Nominal Heating Capacity	16635	21700	28335	34874
	名义输入功率(W) Nominal Input Power	6929	9039	11803	14527
	名义工况能效比(W/W) Nominal COP	2.40	2.40	2.40	2.40
	名义工况电流(A) Nominal RLA	13.30	18.30	26.30	31.60
	最大运行电流(MOC)(A)	26.00	30.50	46.20	51.20
堵转电流(LRA)(A)		117	117	304	304
润滑油类型 Oil Type		POE			
润滑油初次充注量(L) Initial Charge Oil Volume		3.2		5.0	
润滑油重新充注量(L) Recharge Oil Volume		3.0		4.8	
重量(kg) Weight		66		92	

1. R142b 额定工况：蒸发45.0℃冷凝100.0℃过热5.0K过冷5.0K环温35.0℃.
   Rated Condition of R142b Refrigerant: E.T.45.0℃, C.T.100.0℃, S.H.5.0K, S.C.5.0K, A.T.35.0℃.
2. R245fa/R1233zd 额定工况：蒸发50.0℃冷凝120.0℃过热5.0K过冷5.0K环温35.0℃.
   Rated Condition of R245fa/R1233zd Refrigerant: E.T.50.0℃, C.T.120.0℃, S.H.5.0K, S.C.5.0K, A.T.35.0℃.

性能参数
Specification

EVI

型号 Model		WH70KB-TFD-GV1	WH120KB-TFD-GV1	WH160KB-TFD-GV1	WH190KB-TFD-GV1	WH240KB-TFD-GV1
电制Power Supply		380-420V/3~/50Hz or 460V/3~/60Hz				
名义功率(HP) Power in Horse Power		3	5	7	8	10
排量(cc/rev) Displacement		50.6	84.5	108.0	127.0	166.1
R142b	名义制热量(W) Nominal Heating Capacity	10792	18023	23035	27087	35427
	名义输入功率(W) Nominal Input Power	2555	4267	5480	6518	8583
	名义工况能效比(W/W) Nominal COP	4.22	4.22	4.20	4.16	4.13
	名义工况电流(A) Nominal RLA	4.90	8.20	10.20	12.70	16.00
	最大运行电流(MOC)(A)	6.70	13.90	16.40	18.60	26.70
R245fa	名义制热量(W) Nominal Heating Capacity	5568	9298	11884	13974	18276
	名义输入功率(W) Nominal Input Power	2006	3350	4282	5035	6585
	名义工况能效比(W/W) Nominal COP	2.78	2.78	2.78	2.78	2.78
	名义工况电流(A) Nominal RLA	4.90	6.60	8.70	10.50	13.50
	最大运行电流(MOC)(A)	7.80	9.70	12.30	16.50	17.80
R1233zd	名义制热量(W) Nominal Heating Capacity	5059	8448	10797	12697	16605
	名义输入功率(W) Nominal Input Power	1838	3069	3923	4613	6033
	名义工况能效比(W/W) Nominal COP	2.75	2.75	2.75	2.75	2.75
	名义工况电流(A) Nominal RLA	4.00	6.70	8.20	9.80	12.40
	最大运行电流(MOC)(A)	6.30	10.60	14.20	18.00	23.90
堵转电流(LRA)(A)		59.3	83.6	103.4	117	117
润滑油类型 Oil Type		POE				
润滑油初次充注量(L) Initial Charge Oil Volume		1.4	1.8		3.0	
润滑油重新充注量(L) Recharge Oil Volume		1.2	1.6		2.8	
重量(kg) Weight		28	38		66	

1. R142b 额定工况：蒸发45.0℃冷凝100.0℃过热5.0K过冷5.0K环温35.0℃.
   Rated Condition of R142b Refrigerant: E.T.45.0℃, C.T.100.0℃, S.H.5.0K, S.C.5.0K, A.T.35.0℃.
2. R245fa/R1233zd 额定工况：蒸发50.0℃冷凝120.0℃过热5.0K过冷5.0K环温35.0℃.
   Rated Condition of R245fa/R1233zd Refrigerant: E.T.50.0℃, C.T.120.0℃, S.H.5.0K, S.C.5.0K, A.T.35.0℃.

EVI

性能参数
Specification

型号 Model		WH280KB-TFD-GV1	WH360KB-TFD-GV1	WH470KB-TWD-GV1	WH600KB-TWD-GV1
电制Power Supply		380-420V/3~/50Hz or 460V/3~/60Hz			
名义功率(HP) Power in Horse Power		12	15	20	25
排量(cc/rev) Displacement		190.8	248.9	325.0	400.0
R142b	名义制热量(W) Nominal Heating Capacity	40695	53087	69318	85314
	名义输入功率(W) Nominal Input Power	9898	13002	17013	21137
	名义工况能效比(W/W) Nominal COP	4.11	4.08	4.07	4.04
	名义工况电流(A) Nominal RLA	18.60	24.30	34.90	41.80
	最大运行电流(MOC)(A)	29.80	33.50	51.60	61.80
R245fa	名义制热量(W) Nominal Heating Capacity	20994	27387	35761	44013
	名义输入功率(W) Nominal Input Power	7565	9868	12885	15859
	名义工况能效比(W/W) Nominal COP	2.78	2.78	2.78	2.78
	名义工况电流(A) Nominal RLA	14.00	19.40	29.20	34.60
	最大运行电流(MOC)(A)	21.10	29.20	40.90	52.00
R1233zd	名义制热量(W) Nominal Heating Capacity	19075	24883	32491	39989
	名义输入功率(W) Nominal Input Power	6930	9040	11804	14528
	名义工况能效比(W/W) Nominal COP	2.75	2.75	2.75	2.75
	名义工况电流(A) Nominal RLA	13.30	18.30	26.30	31.60
	最大运行电流(MOC)(A)	26.00	32.40	46.20	51.60
堵转电流(LRA)(A)		117	117	304	304
润滑油类型 Oil Type		POE			
润滑油初次充注量(L) Initial Charge Oil Volume		3.2		5.0	
润滑油重新充注量(L) Recharge Oil Volume		3.0		4.8	
重量(kg) Weight		66		92	

1. R142b 额定工况：蒸发45.0℃冷凝100.0℃过热5.0K过冷5.0K环温35.0℃.
   Rated Condition of R142b Refrigerant: E.T.45.0℃, C.T.100.0℃, S.H.5.0K, S.C.5.0K, A.T.35.0℃.
2. R245fa/R1233zd 额定工况：蒸发50.0℃冷凝120.0℃过热5.0K过冷5.0K环温35.0℃.
   Rated Condition of R245fa/R1233zd Refrigerant: E.T.50.0℃, C.T.120.0℃, S.H.5.0K, S.C.5.0K, A.T.35.0℃.

制热量
Heating Capacity

R142b

型号Model	项目Item (kW)	Tc\Te	20℃	25℃	30℃	35℃	40℃	45℃	50℃	55℃	60℃	65℃
WH70KB-TFD-GN1	Q	120℃					6.73	7.54	8.50	9.62	10.92	12.41
	P						3.39	3.42	3.44	3.46	3.48	3.50
	Q	115℃				6.40	7.17	8.08	9.15	10.38	11.80	13.43
	P					3.10	3.13	3.15	3.17	3.19	3.21	3.23
	Q	110℃			6.03	6.77	7.64	8.65	9.82	11.17	12.71	14.47
	P				2.83	2.86	2.88	2.90	2.92	2.94	2.96	2.99
	Q	105℃		5.64	6.34	7.16	8.11	9.22	10.50	11.96	13.63	15.52
	P			2.58	2.61	2.63	2.65	2.67	2.69	2.71	2.73	2.76
	Q	100℃	5.23	5.89	6.66	7.56	8.61	9.81	11.20	12.77	14.56	16.58
	P		2.35	2.37	2.40	2.42	2.44	2.46	2.48	2.50	2.52	2.55
	Q	95℃	5.42	6.15	6.99	7.98	9.11	10.41	11.90	13.60	15.51	17.66
	P		2.16	2.18	2.20	2.22	2.24	2.26	2.28	2.30	2.33	2.36
	Q	90℃	5.63	6.42	7.34	8.40	9.63	11.03	12.63	14.43	16.47	18.75
	P		1.98	2.00	2.02	2.04	2.06	2.08	2.10	2.13	2.15	2.19
	Q	85℃	5.85	6.71	7.70	8.84	10.15	11.65	13.36	15.28	17.44	
	P		1.82	1.84	1.86	1.88	1.89	1.91	1.94	1.96	1.99	
	Q	80℃	6.08	7.00	8.06	9.29	10.69	12.29	14.10	16.14		
	P		1.67	1.69	1.71	1.72	1.74	1.76	1.79	1.82		
	Q	75℃	6.32	7.30	8.44	9.75	11.24	12.93	14.85			
	P		1.53	1.55	1.57	1.59	1.61	1.63	1.66			
	Q	70℃	6.56	7.61	8.82	10.21	11.79	13.59				
	P		1.41	1.42	1.44	1.46	1.48	1.51				
	Q	65℃	6.82	7.93	9.21	10.68	12.35					
	P		1.29	1.31	1.33	1.35	1.37					
	Q	60℃	7.07	8.25	9.61	11.16	12.92					
	P		1.19	1.20	1.22	1.25	1.27					
WH120KB-TFD-GN1	Q	120℃					11.23	12.59	14.19	16.06	18.23	20.72
	P						5.66	5.70	5.74	5.77	5.81	5.84
	Q	115℃				10.68	11.98	13.50	15.28	17.34	19.71	22.43
	P					5.18	5.22	5.26	5.29	5.33	5.36	5.40
	Q	110℃			10.08	11.31	12.75	14.44	16.39	18.65	21.23	24.16
	P				4.73	4.77	4.81	4.84	4.88	4.91	4.95	4.98
	Q	105℃		9.42	10.59	11.95	13.55	15.40	17.53	19.98	22.76	25.91
	P			4.31	4.35	4.39	4.43	4.46	4.49	4.53	4.56	4.60
	Q	100℃	8.73	9.83	11.12	12.63	14.37	16.38	18.70	21.33	24.32	27.69
	P		3.92	3.96	4.00	4.04	4.07	4.10	4.14	4.17	4.21	4.26
	Q	95℃	9.05	10.27	11.68	13.32	15.21	17.39	19.88	22.71	25.90	29.49
	P		3.60	3.64	3.68	3.71	3.74	3.77	3.81	3.85	3.89	3.94
	Q	90℃	9.40	10.72	12.26	14.03	16.08	18.42	21.08	24.10	27.50	31.31
	P		3.31	3.34	3.38	3.41	3.44	3.47	3.51	3.55	3.59	3.65
	Q	85℃	9.77	11.20	12.85	14.76	16.96	19.46	22.31	25.52	29.12	
	P		3.04	3.07	3.10	3.13	3.16	3.20	3.23	3.28	3.33	
	Q	80℃	10.15	11.69	13.47	15.51	17.86	20.52	23.55	26.95		
	P		2.79	2.82	2.85	2.88	2.91	2.95	2.99	3.03		
	Q	75℃	10.55	12.19	14.09	16.28	18.77	21.60	24.80			
	P		2.56	2.59	2.62	2.65	2.68	2.72	2.76			
	Q	70℃	10.96	12.71	14.73	17.05	19.69	22.69				
	P		2.35	2.38	2.41	2.44	2.47	2.52				
	Q	65℃	11.38	13.24	15.38	17.84	20.63					
	P		2.16	2.19	2.22	2.25	2.29					
	Q	60℃	11.81	13.78	16.04	18.63	21.57					
	P		1.98	2.01	2.04	2.08	2.12					

制热量基于吸气过热5.0K，过冷5.0K。*Heating Capacity Based on SH 5.0K, SC 5.0K.*

R142b

制热量
Heating Capacity

型号Model	项目Item (kW)	Tc\Te	20℃	25℃	30℃	35℃	40℃	45℃	50℃	55℃	60℃	65℃
WH160KB-TFD-GN1	Q	120℃					14.36	16.09	18.14	20.53	23.30	26.48
	P						7.28	7.33	7.37	7.42	7.46	7.51
	Q	115℃				13.66	15.31	17.26	19.53	22.16	25.20	28.66
	P					6.65	6.71	6.75	6.80	6.84	6.89	6.93
	Q	110℃			12.88	14.45	16.30	18.45	20.95	23.83	27.13	30.88
	P				6.08	6.13	6.18	6.22	6.26	6.31	6.35	6.40
	Q	105℃		12.04	13.53	15.28	17.32	19.68	22.41	25.53	29.09	33.12
	P			5.53	5.59	5.64	5.68	5.73	5.77	5.81	5.86	5.91
	Q	100℃	11.15	12.57	14.21	16.14	18.37	20.94	23.90	27.27	31.09	35.40
	P		5.03	5.09	5.14	5.19	5.23	5.27	5.31	5.36	5.41	5.47
	Q	95℃	11.57	13.12	14.93	17.02	19.44	22.23	25.41	29.02	33.11	37.70
	P		4.63	4.68	4.72	4.77	4.81	4.85	4.89	4.94	4.99	5.06
	Q	90℃	12.02	13.71	15.67	17.93	20.55	23.54	26.95	30.81	35.15	40.02
	P		4.25	4.30	4.34	4.38	4.42	4.46	4.51	4.56	4.62	4.69
	Q	85℃	12.49	14.31	16.43	18.87	21.67	24.88	28.51	32.61	37.22	
	P		3.90	3.94	3.98	4.02	4.06	4.11	4.16	4.21	4.28	
	Q	80℃	12.97	14.94	17.21	19.83	22.82	26.23	30.09	34.44		
	P		3.58	3.62	3.66	3.70	3.74	3.78	3.84	3.90		
	Q	75℃	13.48	15.59	18.01	20.80	23.99	27.61	31.69			
	P		3.29	3.32	3.36	3.40	3.44	3.49	3.55			
	Q	70℃	14.01	16.25	18.83	21.79	25.17	29.00				
	P		3.02	3.05	3.09	3.13	3.18	3.23				
	Q	65℃	14.55	16.92	19.66	22.80	26.36					
	P		2.77	2.81	2.85	2.89	2.94					
	Q	60℃	15.10	17.61	20.51	23.81	27.57					
	P		2.55	2.58	2.62	2.67	2.73					
WH190KB-TFD-GN1	Q	120℃					16.89	18.93	21.33	24.14	27.40	31.14
	P						8.65	8.71	8.77	8.82	8.87	8.93
	Q	115℃				16.06	18.00	20.29	22.96	26.06	29.63	33.71
	P					7.92	7.98	8.03	8.09	8.14	8.19	8.25
	Q	110℃			15.14	16.99	19.16	21.70	24.64	28.02	31.90	36.31
	P				7.23	7.29	7.35	7.40	7.45	7.50	7.56	7.62
	Q	105℃		14.16	15.91	17.97	20.36	23.14	26.35	30.03	34.21	38.95
	P			6.58	6.65	6.71	6.76	6.81	6.86	6.91	6.97	7.03
	Q	100℃	13.12	14.78	16.72	18.98	21.60	24.62	28.10	32.06	36.56	41.62
	P		5.99	6.05	6.11	6.17	6.22	6.27	6.32	6.37	6.43	6.50
	Q	95℃	13.61	15.43	17.55	20.02	22.87	26.14	29.88	34.13	38.93	44.33
	P		5.50	5.56	5.62	5.67	5.72	5.77	5.82	5.87	5.94	6.02
	Q	90℃	14.13	16.12	18.42	21.09	24.16	27.68	31.69	36.23	41.34	47.06
	P		5.05	5.11	5.16	5.21	5.26	5.31	5.36	5.42	5.49	5.57
	Q	85℃	14.68	16.83	19.32	22.19	25.49	29.25	33.53	38.35	43.77	
	P		4.64	4.69	4.74	4.78	4.83	4.88	4.94	5.01	5.09	
	Q	80℃	15.26	17.57	20.24	23.31	26.84	30.85	35.39	40.50		
	P		4.26	4.31	4.35	4.40	4.45	4.50	4.56	4.64		
	Q	75℃	15.86	18.33	21.18	24.46	28.21	32.46	37.27			
	P		3.91	3.95	4.00	4.04	4.10	4.15	4.22			
	Q	70℃	16.47	19.11	22.14	25.63	29.60	34.10				
	P		3.59	3.63	3.68	3.72	3.78	3.84				
	Q	65℃	17.11	19.90	23.12	26.81	31.00					
	P		3.29	3.34	3.38	3.44	3.50					
	Q	60℃	17.76	20.71	24.11	28.00	32.42					
	P		3.03	3.07	3.12	3.18	3.24					

制热量基于吸气过热5.0K，过冷5.0K。*Heating Capacity Based on SH 5.0K, SC 5.0K.*

制热量 Heating Capacity

R142b

型号Model	项目Item (kW)	Tc\Te	20℃	25℃	30℃	35℃	40℃	45℃	50℃	55℃	60℃	65℃
WH240KB-TFD-GN1	Q	120℃					22.08	24.75	27.90	31.57	35.83	40.73
	P						11.40	11.47	11.55	11.62	11.69	11.76
	Q	115℃				21.00	23.55	26.54	30.03	34.09	38.75	44.08
	P					10.42	10.50	10.58	10.65	10.71	10.78	10.86
	Q	110℃			19.81	22.22	25.06	28.38	32.22	36.65	41.72	47.49
	P				9.51	9.60	9.67	9.74	9.81	9.88	9.95	10.03
	Q	105℃		18.51	20.81	23.50	26.63	30.27	34.46	39.27	44.74	50.94
	P			8.67	8.76	8.83	8.90	8.97	9.03	9.10	9.18	9.26
	Q	100℃	17.16	19.33	21.86	24.82	28.25	32.21	36.75	41.93	47.81	54.44
	P		7.88	7.97	8.05	8.12	8.19	8.25	8.32	8.39	8.47	8.56
	Q	95℃	17.80	20.18	22.96	26.18	29.90	34.19	39.08	44.64	50.92	57.98
	P		7.24	7.33	7.40	7.46	7.53	7.59	7.66	7.74	7.82	7.92
	Q	90℃	18.48	21.08	24.09	27.58	31.60	36.20	41.45	47.38	54.07	61.55
	P		6.65	6.73	6.79	6.86	6.92	6.99	7.06	7.14	7.23	7.34
	Q	85℃	19.20	22.01	25.27	29.02	33.33	38.26	43.85	50.16	57.25	
	P		6.11	6.18	6.24	6.30	6.36	6.43	6.51	6.60	6.70	
	Q	80℃	19.95	22.98	26.47	30.49	35.10	40.34	46.28	52.97		
	P		5.61	5.67	5.73	5.79	5.86	5.93	6.01	6.10		
	Q	75℃	20.74	23.97	27.70	31.99	36.89	42.46	48.74			
	P		5.15	5.21	5.26	5.33	5.39	5.47	5.56			
	Q	70℃	21.55	24.99	28.96	33.52	38.71	44.59				
	P		4.72	4.78	4.84	4.90	4.98	5.06				
	Q	65℃	22.38	26.03	30.24	35.06	40.55					
	P		4.34	4.40	4.46	4.52	4.60					
	Q	60℃	23.22	27.09	31.54	36.62	42.40					
	P		3.99	4.05	4.11	4.18	4.27					
WH280KB-TFD-GN1	Q	120℃					25.37	28.43	32.04	36.27	41.16	46.79
	P						13.14	13.23	13.32	13.40	13.47	13.56
	Q	115℃				24.13	27.05	30.49	34.50	39.15	44.51	50.64
	P					12.02	12.11	12.20	12.28	12.36	12.44	12.52
	Q	110℃			22.75	25.53	28.79	32.60	37.02	42.10	47.93	54.55
	P				10.97	11.07	11.16	11.24	11.31	11.39	11.47	11.56
	Q	105℃		21.27	23.90	26.99	30.59	34.77	39.59	45.11	51.40	58.51
	P			10.00	10.10	10.19	10.27	10.34	10.42	10.50	10.58	10.68
	Q	100℃	19.71	22.20	25.11	28.51	32.45	37.00	42.21	48.17	54.92	62.53
	P		9.09	9.19	9.28	9.37	9.44	9.52	9.59	9.68	9.77	9.87
	Q	95℃	20.45	23.18	26.37	30.07	34.35	39.27	44.89	51.28	58.49	66.60
	P		8.35	8.45	8.53	8.61	8.68	8.76	8.83	8.92	9.02	9.13
	Q	90℃	21.23	24.21	27.68	31.68	36.30	41.59	47.61	54.43	62.11	70.71
	P		7.67	7.76	7.84	7.91	7.98	8.06	8.14	8.23	8.34	8.46
	Q	85℃	22.06	25.28	29.02	33.34	38.29	43.95	50.37	57.62	65.76	
	P		7.04	7.12	7.20	7.27	7.34	7.42	7.50	7.61	7.72	
	Q	80℃	22.92	26.39	30.41	35.03	40.32	46.34	53.16	60.85		
	P		6.47	6.54	6.61	6.68	6.75	6.84	6.93	7.04		
	Q	75℃	23.82	27.53	31.82	36.75	42.38	48.77	55.99			
	P		5.93	6.00	6.07	6.14	6.22	6.31	6.41			
	Q	70℃	24.75	28.70	33.27	38.50	44.46	51.23				
	P		5.45	5.51	5.58	5.66	5.74	5.84				
	Q	65℃	25.70	29.90	34.74	40.27	46.58					
	P		5.00	5.07	5.14	5.22	5.31					
	Q	60℃	26.68	31.12	36.23	42.07	48.71					
	P		4.60	4.67	4.74	4.82	4.92					

制热量基于吸气过热5.0K，过冷5.0K。*Heating Capacity Based on SH 5.0K, SC 5.0K.*

R142b

制热量 Heating Capacity

型号Model	项目Item (kW)	Tc\Te	20℃	25℃	30℃	35℃	40℃	45℃	50℃	55℃	60℃	65℃
WH360KB-TFD-GN1	Q	120℃					33.09	37.09	41.80	47.31	53.69	61.03
	P						17.26	17.38	17.49	17.60	17.70	17.81
	Q	115℃				31.47	35.28	39.77	45.00	51.08	58.07	66.06
	P					15.79	15.91	16.02	16.13	16.23	16.34	16.45
	Q	110℃			29.68	33.30	37.56	42.53	48.29	54.92	62.52	71.16
	P				14.41	14.54	14.66	14.76	14.86	14.96	15.07	15.19
	Q	105℃		27.74	31.18	35.21	39.91	45.36	51.64	58.85	67.05	76.33
	P			13.13	13.26	13.38	13.49	13.59	13.69	13.79	13.90	14.03
	Q	100℃	25.71	28.96	32.76	37.19	42.33	48.26	55.07	62.84	71.64	81.57
	P		11.94	12.08	12.20	12.30	12.40	12.50	12.60	12.71	12.83	12.97
	Q	95℃	26.67	30.24	34.40	39.23	44.81	51.23	58.56	66.89	76.30	86.88
	P		10.97	11.10	11.21	11.31	11.40	11.50	11.61	11.72	11.85	12.00
	Q	90℃	27.69	31.59	36.10	41.33	47.35	54.25	62.11	71.00	81.02	92.24
	P		10.08	10.19	10.29	10.39	10.48	10.58	10.69	10.81	10.95	11.12
	Q	85℃	28.77	32.98	37.86	43.49	49.95	57.33	65.71	75.16	85.78	
	P		9.25	9.36	9.45	9.55	9.64	9.74	9.86	9.99	10.15	
	Q	80℃	29.90	34.43	39.66	45.69	52.60	60.46	69.35	79.37		
	P		8.49	8.59	8.68	8.77	8.87	8.98	9.10	9.25		
	Q	75℃	31.07	35.92	41.51	47.94	55.28	63.62	73.04			
	P		7.79	7.89	7.98	8.07	8.17	8.29	8.42			
	Q	70℃	32.29	37.45	43.40	50.22	58.00	66.83				
	P		7.16	7.24	7.33	7.43	7.54	7.67				
	Q	65℃	33.53	39.01	45.31	52.54	60.76					
	P		6.57	6.66	6.75	6.85	6.97					
	Q	60℃	34.80	40.59	47.26	54.88	63.54					
	P		6.04	6.13	6.23	6.34	6.47					
WH470KB-TWD-GN1	Q	120℃					43.21	48.43	54.58	61.77	70.11	79.70
	P						22.59	22.75	22.89	23.03	23.16	23.30
	Q	115℃				41.10	46.07	51.93	58.76	66.69	75.82	86.25
	P					20.66	20.82	20.97	21.10	21.24	21.38	21.52
	Q	110℃			38.75	43.49	49.04	55.53	63.05	71.72	81.64	92.91
	P				18.86	19.03	19.18	19.31	19.45	19.58	19.72	19.88
	Q	105℃		36.23	40.72	45.98	52.11	59.23	67.43	76.84	87.55	99.67
	P			17.18	17.36	17.51	17.65	17.78	17.91	18.05	18.19	18.36
	Q	100℃	33.57	37.82	42.78	48.56	55.27	63.02	71.91	82.05	93.55	106.51
	P		15.62	15.80	15.96	16.10	16.23	16.36	16.49	16.63	16.79	16.97
	Q	95℃	34.83	39.49	44.92	51.23	58.51	66.89	76.46	87.34	99.63	113.44
	P		14.36	14.52	14.66	14.80	14.92	15.05	15.19	15.33	15.50	15.70
	Q	90℃	36.16	41.24	47.14	53.97	61.83	70.84	81.10	92.71	105.79	120.44
	P		13.19	13.34	13.47	13.59	13.72	13.85	13.99	14.15	14.33	14.55
	Q	85℃	37.57	43.07	49.44	56.79	65.22	74.86	85.80	98.15	112.01	
	P		12.11	12.24	12.37	12.49	12.61	12.75	12.90	13.07	13.28	
	Q	80℃	39.04	44.95	51.79	59.66	68.68	78.94	90.56	103.64		
	P		11.11	11.24	11.36	11.48	11.61	11.75	11.91	12.10		
	Q	75℃	40.58	46.90	54.20	62.60	72.18	83.07	95.37			
	P		10.20	10.32	10.44	10.56	10.69	10.84	11.02			
	Q	70℃	42.16	48.89	56.67	65.58	75.74	87.26				
	P		9.36	9.48	9.60	9.72	9.87	10.03				
	Q	65℃	43.78	50.93	59.17	68.60	79.34					
	P		8.60	8.71	8.83	8.97	9.12					
	Q	60℃	45.44	53.00	61.71	71.66	82.96					
	P		7.91	8.02	8.15	8.29	8.46					

制热量基于吸气过热5.0K，过冷5.0K。*Heating Capacity Based on SH 5.0K, SC 5.0K.*

制热量
Heating Capacity

R142b

型号Model	项目Item (kW)	Tc\Te	20℃	25℃	30℃	35℃	40℃	45℃	50℃	55℃	60℃	65℃
WH600KB-TWD-GN1	Q	120℃					53.18	59.61	67.18	76.03	86.29	98.09
	P						28.06	28.26	28.44	28.61	28.78	28.95
	Q	115℃				50.58	56.71	63.91	72.33	82.08	93.32	106.16
	P					25.67	25.87	26.05	26.22	26.39	26.56	26.74
	Q	110℃			47.69	53.52	60.36	68.34	77.60	88.27	100.47	114.35
	P				23.43	23.64	23.82	23.99	24.16	24.33	24.50	24.69
	Q	105℃		44.59	50.11	56.59	64.14	72.89	82.99	94.57	107.75	122.67
	P			21.35	21.56	21.75	21.92	22.09	22.25	22.42	22.60	22.81
	Q	100℃	41.31	46.54	52.65	59.76	68.02	77.56	88.50	100.98	115.14	131.09
	P		19.41	19.63	19.83	20.00	20.16	20.32	20.49	20.66	20.86	21.08
	Q	95℃	42.86	48.60	55.29	63.05	72.02	82.33	94.11	107.50	122.62	139.62
	P		17.84	18.04	18.22	18.38	18.54	18.70	18.87	19.05	19.26	19.51
	Q	90℃	44.51	50.76	58.02	66.42	76.10	87.19	99.81	114.10	130.20	148.23
	P		16.39	16.57	16.73	16.89	17.04	17.20	17.38	17.58	17.81	18.08
	Q	85℃	46.24	53.00	60.84	69.89	80.28	92.13	105.60	120.79	137.86	
	P		15.04	15.21	15.37	15.52	15.67	15.84	16.03	16.24	16.49	
	Q	80℃	48.05	55.33	63.74	73.43	84.52	97.16	111.46	127.56		
	P		13.81	13.96	14.11	14.26	14.42	14.60	14.80	15.03		
	Q	75℃	49.94	57.72	66.71	77.04	88.84	102.25	117.38			
	P		12.67	12.82	12.96	13.12	13.28	13.47	13.69			
	Q	70℃	51.88	60.18	69.74	80.71	93.22	107.39				
	P		11.63	11.78	11.92	12.08	12.26	12.46				
	Q	65℃	53.88	62.68	72.82	84.43	97.64					
	P		10.68	10.83	10.98	11.14	11.33					
	Q	60℃	55.93	65.23	75.95	88.19	102.11					
	P		9.82	9.97	10.12	10.30	10.51					

制热量基于吸气过热5.0K，过冷5.0K。*Heating Capacity Based on SH 5.0K, SC 5.0K.*

EVI-R142b

制热量
Heating Capacity

型号Model	项目Item (KW)	Tc\Te	10℃	15℃	20℃	25℃	30℃	35℃	40℃	45℃	50℃	55℃	60℃	65℃
WH70KB-TFD-GV1	Q	120℃	4.35	4.67	5.05	5.49	6.02	6.65	7.40	8.29	9.35	10.58	12.01	13.65
	P		3.28	3.34	3.39	3.43	3.47	3.50	3.53	3.55	3.58	3.60	3.62	3.64
	Q	115℃	4.38	4.76	5.20	5.71	6.32	7.04	7.89	8.89	10.06	11.42	12.99	14.77
	P		3.03	3.08	3.13	3.16	3.20	3.23	3.25	3.27	3.30	3.32	3.34	3.36
	Q	110℃	4.43	4.87	5.36	5.95	6.64	7.45	8.40	9.51	10.80	12.28	13.98	15.91
	P		2.79	2.84	2.88	2.92	2.95	2.97	3.00	3.02	3.04	3.06	3.08	3.10
	Q	105℃	4.50	4.99	5.55	6.20	6.97	7.87	8.92	10.14	11.55	13.16	14.99	17.07
	P		2.57	2.62	2.65	2.68	2.71	2.73	2.76	2.78	2.80	2.82	2.84	2.87
	Q	100℃	4.59	5.13	5.75	6.48	7.33	8.32	9.47	10.79	12.31	14.05	16.02	18.24
	P		2.37	2.41	2.44	2.47	2.49	2.51	2.54	2.56	2.58	2.60	2.62	2.65
	Q	95℃	4.69	5.28	5.96	6.76	7.69	8.77	10.02	11.46	13.10	14.96	17.06	19.43
	P		2.18	2.21	2.24	2.27	2.29	2.31	2.33	2.35	2.37	2.40	2.42	2.45
	Q	90℃	4.80	5.45	6.19	7.06	8.07	9.24	10.59	12.13	13.89	15.88	18.12	20.63
	P		2.00	2.03	2.06	2.08	2.10	2.12	2.14	2.16	2.19	2.21	2.24	2.27
	Q	85℃	4.93	5.62	6.43	7.38	8.47	9.73	11.17	12.82	14.69	16.81	19.18	
	P		1.84	1.87	1.89	1.91	1.93	1.95	1.97	1.99	2.01	2.04	2.07	
	Q	80℃	5.07	5.82	6.69	7.70	8.87	10.22	11.76	13.52	15.51	17.75		
	P		1.69	1.71	1.74	1.76	1.77	1.79	1.81	1.84	1.86	1.89		
	Q	75℃	5.21	6.02	6.95	8.03	9.28	10.72	12.36	14.23	16.33			
	P		1.55	1.57	1.59	1.61	1.63	1.65	1.67	1.69	1.72			
	Q	70℃	5.37	6.22	7.22	8.37	9.70	11.23	12.97	14.94				
	P		1.42	1.44	1.46	1.48	1.50	1.52	1.54	1.57				
	Q	65℃	5.53	6.44	7.50	8.72	10.13	11.75	13.59					
	P		1.31	1.33	1.34	1.36	1.38	1.40	1.42					
	Q	60℃	5.70	6.66	7.78	9.08	10.57	12.27	14.21					
	P		1.20	1.22	1.23	1.25	1.27	1.30	1.32					
WH120KB-TFD-GV1	Q	120℃	7.26	7.81	8.43	9.17	10.05	11.10	12.36	13.85	15.61	17.67	20.05	22.79
	P		5.48	5.57	5.66	5.73	5.79	5.85	5.89	5.93	5.97	6.01	6.04	6.08
	Q	115℃	7.32	7.95	8.68	9.53	10.55	11.75	13.18	14.85	16.81	19.07	21.68	24.67
	P		5.06	5.15	5.22	5.29	5.34	5.39	5.43	5.47	5.50	5.54	5.58	5.61
	Q	110℃	7.40	8.12	8.96	9.93	11.08	12.44	14.03	15.88	18.03	20.51	23.35	26.57
	P		4.66	4.74	4.81	4.87	4.92	4.96	5.00	5.04	5.07	5.11	5.14	5.18
	Q	105℃	7.52	8.33	9.27	10.36	11.65	13.15	14.90	16.94	19.29	21.98	25.04	28.51
	P		4.30	4.37	4.43	4.48	4.53	4.57	4.60	4.64	4.67	4.71	4.75	4.79
	Q	100℃	7.66	8.56	9.60	10.82	12.23	13.89	15.81	18.02	20.57	23.47	26.75	30.46
	P		3.96	4.02	4.07	4.12	4.16	4.20	4.23	4.27	4.30	4.34	4.38	4.43
	Q	95℃	7.83	8.81	9.96	11.29	12.85	14.65	16.73	19.13	21.87	24.98	28.49	32.44
	P		3.64	3.70	3.75	3.79	3.82	3.86	3.89	3.93	3.96	4.00	4.04	4.10
	Q	90℃	8.02	9.09	10.34	11.80	13.48	15.44	17.68	20.26	23.19	26.51	30.26	34.45
	P		3.35	3.40	3.44	3.48	3.51	3.55	3.58	3.61	3.65	3.69	3.74	3.79
	Q	85℃	8.23	9.39	10.75	12.32	14.14	16.24	18.65	21.41	24.54	28.07	32.04	
	P		3.07	3.12	3.16	3.19	3.23	3.26	3.29	3.33	3.36	3.41	3.46	
	Q	80℃	8.46	9.71	11.17	12.86	14.81	17.06	19.64	22.58	25.90	29.64		
	P		2.82	2.86	2.90	2.93	2.96	2.99	3.03	3.06	3.11	3.16		
	Q	75℃	8.71	10.05	11.60	13.41	15.50	17.90	20.64	23.76	27.28			
	P		2.59	2.63	2.66	2.69	2.72	2.75	2.79	2.83	2.87			
	Q	70℃	8.97	10.39	12.06	13.98	16.21	18.76	21.66	24.96				
	P		2.38	2.41	2.44	2.47	2.50	2.54	2.57	2.62				
	Q	65℃	9.24	10.76	12.52	14.57	16.92	19.62	22.69					
	P		2.18	2.21	2.24	2.27	2.30	2.34	2.38					
	Q	60℃	9.53	11.13	13.00	15.16	17.65	20.49	23.73					
	P		2.00	2.03	2.06	2.09	2.13	2.16	2.21					

制热量基于吸气过热5.0K，过冷5.0K。*Heating Capacity Based on SH 5.0K, SC 5.0K.*

制热量
Heating Capacity

R142b-EVI

型号Model	项目Item (KW)	Tc\Te	10℃	15℃	20℃	25℃	30℃	35℃	40℃	45℃	50℃	55℃	60℃	65℃
WH160KB-TFD-GV1	Q	120℃	9.28	9.98	10.78	11.72	12.84	14.19	15.79	17.70	19.95	22.58	25.63	29.13
	P		7.03	7.16	7.27	7.36	7.44	7.51	7.57	7.62	7.67	7.71	7.76	7.81
	Q	115℃	9.35	10.16	11.09	12.19	13.48	15.02	16.84	18.98	21.48	24.38	27.72	31.53
	P		6.50	6.61	6.71	6.79	6.86	6.92	6.98	7.02	7.07	7.11	7.16	7.21
	Q	110℃	9.46	10.38	11.45	12.70	14.17	15.90	17.93	20.30	23.05	26.22	29.84	33.96
	P		5.99	6.09	6.18	6.25	6.32	6.37	6.42	6.47	6.51	6.56	6.61	6.66
	Q	105℃	9.61	10.64	11.84	13.24	14.88	16.81	19.05	21.65	24.65	28.09	32.00	36.43
	P		5.52	5.61	5.69	5.76	5.81	5.87	5.91	5.96	6.00	6.05	6.09	6.15
	Q	100℃	9.79	10.94	12.27	13.82	15.64	17.75	20.20	23.03	26.28	29.99	34.20	38.93
	P		5.08	5.16	5.23	5.29	5.35	5.39	5.44	5.48	5.52	5.57	5.62	5.68
	Q	95℃	10.00	11.27	12.73	14.43	16.42	18.72	21.39	24.45	27.95	31.93	36.42	41.47
	P		4.68	4.75	4.81	4.86	4.91	4.96	5.00	5.04	5.09	5.14	5.19	5.26
	Q	90℃	10.25	11.62	13.22	15.08	17.23	19.73	22.60	25.89	29.64	33.89	38.67	44.03
	P		4.30	4.36	4.42	4.47	4.51	4.55	4.60	4.64	4.69	4.74	4.80	4.87
	Q	85℃	10.52	12.01	13.73	15.74	18.07	20.76	23.84	27.36	31.36	35.88	40.94	
	P		3.95	4.01	4.06	4.10	4.14	4.18	4.23	4.27	4.32	4.38	4.45	
	Q	80℃	10.81	12.41	14.27	16.43	18.93	21.81	25.10	28.86	33.10	37.89		
	P		3.62	3.68	3.72	3.76	3.81	3.85	3.89	3.94	3.99	4.05		
	Q	75℃	11.13	12.84	14.83	17.14	19.81	22.88	26.39	30.37	34.86			
	P		3.33	3.37	3.42	3.46	3.50	3.54	3.58	3.63	3.69			
	Q	70℃	11.46	13.29	15.41	17.87	20.71	23.97	27.69	31.90				
	P		3.05	3.10	3.14	3.18	3.21	3.26	3.30	3.36				
	Q	65℃	11.81	13.75	16.00	18.62	21.63	25.08	29.00					
	P		2.80	2.84	2.88	2.92	2.96	3.00	3.06					
	Q	60℃	12.17	14.22	16.61	19.37	22.56	26.19	30.33					
	P		2.57	2.61	2.65	2.69	2.73	2.78	2.83					
WH190KB-TFD-GV1	Q	120℃	10.92	11.73	12.67	13.78	15.10	16.68	18.57	20.82	23.46	26.55	30.14	34.26
	P		8.37	8.52	8.64	8.75	8.85	8.93	9.00	9.06	9.12	9.18	9.23	9.29
	Q	115℃	11.00	11.95	13.04	14.33	15.86	17.66	19.80	22.32	25.26	28.67	32.59	37.08
	P		7.73	7.86	7.98	8.07	8.16	8.23	8.30	8.36	8.41	8.46	8.52	8.58
	Q	110℃	11.13	12.21	13.46	14.93	16.66	18.69	21.08	23.87	27.10	30.83	35.09	39.94
	P		7.13	7.25	7.35	7.44	7.52	7.58	7.64	7.70	7.75	7.80	7.86	7.92
	Q	105℃	11.30	12.52	13.93	15.57	17.50	19.76	22.40	25.46	28.99	33.03	37.63	42.84
	P		6.57	6.68	6.77	6.85	6.92	6.98	7.03	7.08	7.14	7.19	7.25	7.32
	Q	100℃	11.51	12.86	14.43	16.25	18.39	20.87	23.76	27.09	30.91	35.27	40.21	45.78
	P		6.05	6.14	6.23	6.30	6.36	6.41	6.47	6.52	6.57	6.63	6.69	6.76
	Q	95℃	11.76	13.25	14.97	16.97	19.31	22.02	25.15	28.75	32.87	37.54	42.83	48.76
	P		5.56	5.65	5.72	5.79	5.84	5.90	5.95	6.00	6.05	6.11	6.18	6.26
	Q	90℃	12.05	13.67	15.54	17.73	20.26	23.20	26.58	30.45	34.86	39.85	45.47	51.77
	P		5.11	5.19	5.26	5.31	5.37	5.42	5.47	5.52	5.57	5.64	5.71	5.80
	Q	85℃	12.37	14.12	16.15	18.51	21.25	24.41	28.04	32.18	36.88	42.19	48.15	
	P		4.70	4.76	4.82	4.88	4.93	4.98	5.03	5.08	5.14	5.21	5.29	
	Q	80℃	12.71	14.60	16.78	19.32	22.26	25.65	29.52	33.93	38.93	44.55		
	P		4.31	4.37	4.43	4.48	4.53	4.57	4.63	4.68	4.75	4.82		
	Q	75℃	13.08	15.10	17.44	20.16	23.30	26.91	31.03	35.71	41.00			
	P		3.96	4.01	4.06	4.11	4.16	4.21	4.26	4.32	4.39			
	Q	70℃	13.48	15.62	18.12	21.02	24.36	28.19	32.56	37.51				
	P		3.63	3.68	3.73	3.78	3.82	3.87	3.93	4.00				
	Q	65℃	13.89	16.17	18.82	21.89	25.43	29.49	34.10					
	P		3.34	3.38	3.43	3.47	3.52	3.57	3.64					
	Q	60℃	14.32	16.73	19.53	22.78	26.52	30.80	35.66					
	P		3.06	3.11	3.15	3.20	3.25	3.30	3.37					

制热量基于吸气过热5.0K，过冷5.0K。*Heating Capacity Based on SH 5.0K, SC 5.0K.*

EVI-R142b

制热量
Heating Capacity

型号Model	项目Item (KW)	Tc\Te	10℃	15℃	20℃	25℃	30℃	35℃	40℃	45℃	50℃	55℃	60℃	65℃
WH240KB-TFD-GV1	Q	120℃	14.28	15.35	16.57	18.02	19.75	21.82	24.29	27.23	30.69	34.73	39.41	44.80
	P		11.02	11.21	11.38	11.53	11.65	11.76	11.85	11.93	12.01	12.08	12.15	12.23
	Q	115℃	14.39	15.63	17.06	18.74	20.74	23.10	25.90	29.19	33.04	37.49	42.62	48.49
	P		10.17	10.35	10.50	10.63	10.74	10.84	10.92	11.00	11.07	11.14	11.22	11.29
	Q	110℃	14.55	15.97	17.61	19.53	21.79	24.45	27.57	31.22	35.45	40.32	45.89	52.23
	P		9.38	9.54	9.68	9.79	9.90	9.98	10.06	10.13	10.20	10.27	10.35	10.43
	Q	105℃	14.78	16.37	18.21	20.37	22.89	25.85	29.30	33.30	37.91	43.20	49.22	56.03
	P		8.65	8.79	8.91	9.02	9.11	9.19	9.26	9.33	9.40	9.47	9.55	9.63
	Q	100℃	15.06	16.82	18.87	21.26	24.05	27.30	31.07	35.43	40.42	46.13	52.59	59.88
	P		7.96	8.09	8.20	8.29	8.37	8.45	8.52	8.58	8.65	8.73	8.81	8.90
	Q	95℃	15.39	17.33	19.58	22.20	25.25	28.80	32.90	37.60	42.99	49.10	56.01	63.77
	P		7.32	7.44	7.53	7.62	7.69	7.76	7.83	7.90	7.97	8.05	8.13	8.24
	Q	90℃	15.76	17.88	20.33	23.19	26.50	30.34	34.76	39.82	45.59	52.12	59.47	67.71
	P		6.73	6.83	6.92	7.00	7.07	7.13	7.20	7.27	7.34	7.42	7.52	7.63
	Q	85℃	16.18	18.46	21.12	24.21	27.79	31.92	36.67	42.08	48.23	55.18	62.97	
	P		6.18	6.27	6.35	6.42	6.49	6.55	6.62	6.69	6.77	6.86	6.96	
	Q	80℃	16.63	19.09	21.95	25.27	29.12	33.54	38.61	44.38	50.91	58.27		
	P		5.68	5.76	5.83	5.90	5.96	6.02	6.09	6.16	6.25	6.35		
	Q	75℃	17.11	19.75	22.81	26.37	30.47	35.19	40.58	46.70	53.62			
	P		5.21	5.29	5.35	5.41	5.48	5.54	5.61	5.69	5.78			
	Q	70℃	17.63	20.43	23.70	27.49	31.86	36.87	42.58	49.05				
	P		4.78	4.85	4.91	4.97	5.03	5.10	5.18	5.26				
	Q	65℃	18.16	21.14	24.61	28.63	33.26	38.57	44.60					
	P		4.39	4.45	4.51	4.57	4.64	4.71	4.79					
	Q	60℃	18.72	21.87	25.55	29.80	34.69	40.29	46.64					
	P		4.03	4.09	4.15	4.21	4.27	4.35	4.44					
WH280KB-TFD-GV1	Q	120℃	16.40	17.63	19.04	20.70	22.68	25.06	27.90	31.28	35.25	39.89	45.28	51.47
	P		12.70	12.93	13.13	13.29	13.44	13.56	13.67	13.76	13.85	13.93	14.01	14.10
	Q	115℃	16.52	17.95	19.60	21.53	23.82	26.54	29.75	33.53	37.95	43.07	48.96	55.70
	P		11.73	11.94	12.11	12.26	12.39	12.50	12.60	12.69	12.77	12.85	12.93	13.02
	Q	110℃	16.72	18.35	20.23	22.43	25.03	28.08	31.67	35.86	40.72	46.31	52.72	60.00
	P		10.82	11.00	11.16	11.30	11.41	11.51	11.60	11.69	11.77	11.85	11.93	12.03
	Q	105℃	16.98	18.81	20.92	23.40	26.29	29.69	33.65	38.25	43.55	49.62	56.54	64.36
	P		9.97	10.14	10.28	10.40	10.50	10.59	10.68	10.76	10.84	10.92	11.01	11.11
	Q	100℃	17.30	19.33	21.68	24.42	27.62	31.36	35.69	40.69	46.44	52.99	60.41	68.78
	P		9.18	9.33	9.45	9.56	9.66	9.74	9.82	9.90	9.98	10.06	10.16	10.27
	Q	95℃	17.68	19.90	22.49	25.50	29.01	33.08	37.79	43.20	49.38	56.40	64.34	73.26
	P		8.44	8.58	8.69	8.79	8.87	8.95	9.03	9.11	9.19	9.28	9.38	9.50
	Q	90℃	18.10	20.53	23.35	26.63	30.44	34.85	39.93	45.75	52.37	59.87	68.32	77.78
	P		7.76	7.88	7.98	8.07	8.15	8.22	8.30	8.38	8.46	8.56	8.67	8.80
	Q	85℃	18.58	21.21	24.26	27.81	31.92	36.67	42.12	48.34	55.41	63.38	72.34	
	P		7.13	7.23	7.33	7.41	7.48	7.56	7.63	7.71	7.81	7.91	8.03	
	Q	80℃	19.10	21.93	25.21	29.03	33.45	38.53	44.35	50.98	58.48	66.93		
	P		6.55	6.64	6.72	6.80	6.87	6.95	7.02	7.11	7.21	7.32		
	Q	75℃	19.66	22.68	26.20	30.29	35.00	40.42	46.62	53.65	61.59			
	P		6.01	6.09	6.17	6.24	6.31	6.39	6.47	6.56	6.67			
	Q	70℃	20.25	23.47	27.22	31.58	36.59	42.35	48.91	56.35				
	P		5.52	5.59	5.67	5.73	5.81	5.88	5.97	6.07				
	Q	65℃	20.87	24.29	28.27	32.89	38.21	44.30	51.23					
	P		5.06	5.14	5.20	5.27	5.35	5.43	5.52					
	Q	60℃	21.51	25.13	29.34	34.23	39.85	46.28	53.58					
	P		4.65	4.72	4.78	4.85	4.93	5.02	5.12					

制热量基于吸气过热5.0K，过冷5.0K。*Heating Capacity Based on SH 5.0K, SC 5.0K.*

制热量
Heating Capacity

R142b-EVI

型号Model	项目Item (KW)	Tc\Te	10℃	15℃	20℃	25℃	30℃	35℃	40℃	45℃	50℃	55℃	60℃	65℃
WH360KB-TFD-GV1	Q	120℃	21.40	22.99	24.83	27.00	29.59	32.70	36.40	40.80	45.98	52.04	59.06	67.14
	P		16.69	16.99	17.24	17.46	17.65	17.81	17.95	18.08	18.19	18.30	18.41	18.52
	Q	115℃	21.56	23.42	25.56	28.09	31.07	34.62	38.81	43.74	49.51	56.18	63.87	72.66
	P		15.41	15.68	15.91	16.11	16.27	16.42	16.55	16.67	16.77	16.88	16.99	17.11
	Q	110℃	21.81	23.93	26.39	29.26	32.65	36.63	41.31	46.78	53.12	60.42	68.77	78.27
	P		14.21	14.46	14.66	14.84	14.99	15.12	15.24	15.35	15.46	15.56	15.67	15.80
	Q	105℃	22.15	24.53	27.29	30.52	34.30	38.73	43.90	49.89	56.81	64.73	73.75	83.96
	P		13.10	13.31	13.50	13.66	13.79	13.92	14.03	14.13	14.23	14.34	14.46	14.59
	Q	100℃	22.57	25.21	28.28	31.86	36.04	40.91	46.56	53.09	60.58	69.12	78.81	89.73
	P		12.06	12.25	12.42	12.56	12.68	12.80	12.90	13.00	13.11	13.22	13.34	13.49
	Q	95℃	23.06	25.97	29.34	33.27	37.84	43.15	49.29	56.35	64.42	73.58	83.93	95.56
	P		11.09	11.26	11.41	11.54	11.66	11.76	11.86	11.96	12.07	12.19	12.32	12.48
	Q	90℃	23.62	26.79	30.46	34.74	39.71	45.47	52.09	59.68	68.32	78.10	89.12	101.46
	P		10.20	10.35	10.48	10.60	10.70	10.80	10.90	11.01	11.12	11.25	11.39	11.56
	Q	85℃	24.24	27.67	31.65	36.28	41.65	47.84	54.95	63.06	72.28	82.68	94.36	
	P		9.37	9.50	9.62	9.73	9.83	9.93	10.03	10.13	10.25	10.39	10.55	
	Q	80℃	24.92	28.60	32.89	37.87	43.63	50.26	57.86	66.50	76.29	87.31		
	P		8.60	8.72	8.83	8.93	9.03	9.12	9.23	9.34	9.47	9.62		
	Q	75℃	25.64	29.59	34.18	39.51	45.66	52.73	60.81	69.98	80.35			
	P		7.89	8.01	8.11	8.20	8.29	8.39	8.50	8.62	8.76			
	Q	70℃	26.41	30.62	35.51	41.19	47.74	55.25	63.81	73.51				
	P		7.25	7.35	7.44	7.53	7.63	7.73	7.84	7.97				
	Q	65℃	27.22	31.68	36.88	42.91	49.85	57.79	66.83					
	P		6.65	6.75	6.84	6.93	7.02	7.13	7.25					
	Q	60℃	28.06	32.78	38.28	44.65	51.98	60.37	69.89					
	P		6.11	6.20	6.28	6.38	6.48	6.59	6.72					
WH470KB-TWD-GV1	Q	120℃	27.94	30.02	32.42	35.26	38.64	42.69	47.53	53.28	60.04	67.95	77.12	87.67
	P		21.84	22.23	22.56	22.85	23.10	23.31	23.49	23.66	23.81	23.95	24.09	24.24
	Q	115℃	28.15	30.58	33.38	36.67	40.57	45.20	50.68	57.12	64.64	73.36	83.40	94.88
	P		20.16	20.52	20.82	21.07	21.30	21.49	21.65	21.81	21.95	22.09	22.23	22.38
	Q	110℃	28.48	31.25	34.45	38.21	42.63	47.83	53.95	61.08	69.36	78.89	89.80	102.20
	P		18.60	18.92	19.19	19.42	19.62	19.79	19.94	20.09	20.22	20.36	20.51	20.67
	Q	105℃	28.92	32.03	35.64	39.85	44.79	50.57	57.32	65.15	74.18	84.52	96.30	109.64
	P		17.14	17.42	17.66	17.87	18.05	18.21	18.35	18.49	18.63	18.77	18.92	19.09
	Q	100℃	29.46	32.92	36.93	41.60	47.05	53.41	60.80	69.32	79.10	90.25	102.90	117.16
	P		15.78	16.03	16.25	16.43	16.60	16.74	16.88	17.01	17.15	17.30	17.46	17.65
	Q	95℃	30.11	33.90	38.31	43.44	49.41	56.35	64.36	73.58	84.11	96.08	109.59	124.78
	P		14.51	14.74	14.93	15.10	15.25	15.39	15.52	15.65	15.79	15.95	16.12	16.33
	Q	90℃	30.84	34.98	39.78	45.37	51.86	59.37	68.02	77.92	89.21	101.98	116.37	132.48
	P		13.34	13.54	13.72	13.87	14.01	14.14	14.27	14.40	14.55	14.72	14.91	15.13
	Q	85℃	31.65	36.13	41.33	47.37	54.38	62.46	71.75	82.34	94.38	107.96	123.21	
	P		12.26	12.44	12.59	12.73	12.86	12.99	13.12	13.26	13.42	13.60	13.81	
	Q	80℃	32.53	37.35	42.95	49.45	56.97	65.63	75.54	86.83	99.61	114.01		
	P		11.25	11.42	11.56	11.69	11.81	11.94	12.07	12.22	12.39	12.59		
	Q	75℃	33.48	38.64	44.63	51.59	59.62	68.86	79.40	91.38	104.91			
	P		10.33	10.48	10.61	10.73	10.85	10.98	11.12	11.28	11.46			
	Q	70℃	34.49	39.98	46.37	53.78	62.33	72.14	83.31	95.98				
	P		9.48	9.62	9.74	9.86	9.98	10.11	10.26	10.43				
	Q	65℃	35.54	41.37	48.16	56.02	65.09	75.46	87.27					
	P		8.70	8.83	8.94	9.06	9.19	9.33	9.49					
	Q	60℃	36.63	42.80	49.98	58.30	67.88	78.82	91.26					
	P		7.99	8.11	8.22	8.34	8.47	8.62	8.80					

制热量基于吸气过热5.0K，过冷5.0K。*Heating Capacity Based on SH 5.0K, SC 5.0K.*

EVI-R142b

制热量
Heating Capacity

型号Model	项目Item (KW)	Tc\Te	10℃	15℃	20℃	25℃	30℃	35℃	40℃	45℃	50℃	55℃	60℃	65℃
WH600KB-TWD-GV1	Q	120℃	34.39	36.95	39.91	43.39	47.56	52.54	58.50	65.57	73.90	83.63	94.92	107.90
	P		27.13	27.61	28.03	28.39	28.69	28.96	29.19	29.39	29.57	29.75	29.93	30.11
	Q	115℃	34.64	37.63	41.08	45.14	49.94	55.64	62.38	70.30	79.56	90.29	102.65	116.77
	P		25.05	25.49	25.86	26.18	26.46	26.69	26.90	27.09	27.27	27.44	27.62	27.81
	Q	110℃	35.05	38.46	42.40	47.02	52.46	58.87	66.40	75.18	85.36	97.09	110.52	125.79
	P		23.11	23.50	23.83	24.12	24.37	24.58	24.78	24.95	25.13	25.30	25.48	25.68
	Q	105℃	35.59	39.42	43.86	49.05	55.13	62.24	70.55	80.18	91.29	104.03	118.53	134.94
	P		21.29	21.64	21.94	22.20	22.42	22.62	22.80	22.97	23.14	23.32	23.51	23.72
	Q	100℃	36.26	40.52	45.45	51.20	57.91	65.74	74.83	85.31	97.35	111.08	126.65	144.20
	P		19.60	19.92	20.19	20.42	20.62	20.80	20.97	21.14	21.31	21.49	21.69	21.93
	Q	95℃	37.05	41.73	47.15	53.46	60.82	69.35	79.22	90.56	103.52	118.25	134.88	153.58
	P		18.03	18.31	18.55	18.76	18.95	19.12	19.28	19.45	19.62	19.81	20.03	20.29
	Q	90℃	37.95	43.05	48.96	55.84	63.82	73.07	83.71	95.91	109.79	125.51	143.22	163.06
	P		16.57	16.83	17.04	17.23	17.40	17.56	17.72	17.89	18.08	18.28	18.52	18.80
	Q	85℃	38.95	44.46	50.87	58.31	66.93	76.88	88.30	101.35	116.16	132.87	151.65	
	P		15.23	15.45	15.64	15.82	15.98	16.14	16.30	16.47	16.67	16.89	17.15	
	Q	80℃	40.04	45.97	52.86	60.86	70.12	80.77	92.98	106.87	122.60	140.32		
	P		13.98	14.18	14.36	14.52	14.68	14.83	15.00	15.18	15.39	15.64		
	Q	75℃	41.21	47.55	54.93	63.49	73.38	84.75	97.73	112.47	129.12			
	P		12.83	13.02	13.18	13.33	13.48	13.64	13.82	14.01	14.24			
	Q	70℃	42.45	49.21	57.07	66.20	76.72	88.78	102.54	118.13				
	P		11.78	11.95	12.10	12.25	12.40	12.56	12.75	12.96				
	Q	65℃	43.74	50.92	59.27	68.95	80.11	92.88	107.41					
	P		10.81	10.97	11.11	11.26	11.41	11.59	11.79					
	Q	60℃	45.09	52.68	61.52	71.76	83.54	97.01	112.32					
	P		9.93	10.07	10.22	10.36	10.53	10.71	10.93					

制热量基于吸气过热5.0K，过冷5.0K。*Heating Capacity Based on SH 5.0K, SC 5.0K.*

制热量
Heating Capacity

R245fa

型号Model	项目Item (kW)	Tc\Te	22℃	25℃	30℃	35℃	40℃	45℃	50℃	55℃	60℃	65℃	70℃
WH70KB-TFD-GN1	Q	130℃						4.00	4.52	5.14	5.86	6.70	7.69
	P							2.09	2.12	2.15	2.18	2.20	2.22
	Q	125℃					3.67	4.16	4.74	5.41	6.20	7.11	8.17
	P						1.91	1.94	1.97	2.00	2.02	2.04	2.07
	Q	120℃				3.33	3.79	4.33	4.95	5.69	6.54	7.52	8.65
	P					1.74	1.77	1.80	1.83	1.86	1.88	1.90	1.92
	Q	115℃			2.99	3.42	3.92	4.50	5.18	5.97	6.88	7.93	9.14
	P				1.58	1.62	1.65	1.68	1.70	1.72	1.74	1.77	1.79
	Q	110℃		2.66	3.06	3.52	4.06	4.68	5.41	6.25	7.23	8.35	9.63
	P			1.43	1.47	1.50	1.53	1.55	1.58	1.60	1.62	1.64	1.66
	Q	105℃	2.47	2.71	3.14	3.63	4.20	4.87	5.64	6.54	7.57	8.76	10.12
	P		1.31	1.33	1.37	1.39	1.42	1.44	1.46	1.48	1.50	1.53	1.55
	Q	100℃	2.52	2.76	3.22	3.74	4.35	5.05	5.88	6.83	7.92	9.18	10.60
	P		1.22	1.24	1.27	1.29	1.32	1.34	1.36	1.38	1.40	1.42	1.45
	Q	95℃	2.57	2.83	3.30	3.85	4.49	5.24	6.11	7.12	8.27	9.59	11.09
	P		1.13	1.15	1.18	1.20	1.22	1.24	1.26	1.28	1.30	1.33	1.35
	Q	90℃	2.63	2.89	3.39	3.97	4.64	5.43	6.35	7.40	8.62	10.00	11.57
	P		1.05	1.07	1.09	1.11	1.13	1.15	1.17	1.19	1.21	1.24	1.27
	Q	85℃	2.69	2.97	3.48	4.09	4.80	5.62	6.58	7.69	8.96	10.41	
	P		0.98	0.99	1.01	1.03	1.05	1.07	1.09	1.11	1.13	1.16	
	Q	80℃	2.76	3.04	3.58	4.21	4.95	5.81	6.82	7.98	9.31		
	P		0.91	0.92	0.94	0.96	0.98	0.99	1.01	1.04	1.06		
	Q	75℃	2.83	3.12	3.67	4.33	5.10	6.00	7.05	8.26			
	P		0.84	0.86	0.87	0.89	0.91	0.93	0.95	0.97			
WH120KB-TFD-GN1	Q	130℃						6.68	7.55	8.58	9.79	11.20	12.83
	P							3.49	3.54	3.59	3.63	3.67	3.71
	Q	125℃					6.13	6.95	7.91	9.03	10.35	11.87	13.64
	P						3.19	3.24	3.29	3.34	3.38	3.41	3.45
	Q	120℃				5.57	6.33	7.23	8.27	9.49	10.91	12.56	14.45
	P					2.91	2.96	3.01	3.06	3.10	3.14	3.17	3.21
	Q	115℃			5.00	5.72	6.55	7.52	8.65	9.96	11.49	13.25	15.26
	P				2.64	2.70	2.75	2.80	2.84	2.88	2.91	2.95	2.99
	Q	110℃		4.44	5.11	5.88	6.78	7.82	9.03	10.44	12.07	13.94	16.08
	P			2.39	2.45	2.51	2.55	2.60	2.63	2.67	2.70	2.74	2.78
	Q	105℃	4.13	4.52	5.24	6.06	7.01	8.13	9.42	10.92	12.65	14.63	16.89
	P		2.19	2.22	2.28	2.33	2.37	2.41	2.44	2.48	2.51	2.55	2.59
	Q	100℃	4.21	4.62	5.37	6.24	7.26	8.44	9.81	11.40	13.23	15.32	17.71
	P		2.03	2.07	2.12	2.16	2.20	2.23	2.27	2.30	2.34	2.37	2.42
	Q	95℃	4.30	4.72	5.51	6.43	7.51	8.75	10.21	11.88	13.81	16.01	18.52
	P		1.89	1.92	1.97	2.00	2.04	2.07	2.11	2.14	2.17	2.21	2.26
	Q	90℃	4.39	4.83	5.66	6.63	7.76	9.07	10.60	12.37	14.39	16.70	19.32
	P		1.76	1.78	1.82	1.86	1.89	1.92	1.96	1.99	2.03	2.07	2.12
	Q	85℃	4.50	4.95	5.82	6.83	8.01	9.39	11.00	12.85	14.97	17.39	
	P		1.63	1.66	1.69	1.73	1.76	1.79	1.82	1.85	1.89	1.94	
	Q	80℃	4.61	5.08	5.97	7.03	8.26	9.71	11.39	13.32	15.54		
	P		1.52	1.54	1.57	1.60	1.63	1.66	1.69	1.73	1.77		
	Q	75℃	4.72	5.20	6.13	7.23	8.52	10.03	11.78	13.79			
	P		1.41	1.43	1.46	1.49	1.52	1.55	1.58	1.62			

制热量基于吸气过热5.0K，过冷5.0K。*Heating Capacity Based on SH 5.0K, SC 5.0K.*

R245fa

制热量
Heating Capacity

型号Model	项目Item (kW)	Tc\Te	22℃	25℃	30℃	35℃	40℃	45℃	50℃	55℃	60℃	65℃	70℃
WH160KB-TFD-GN1	Q	130℃						8.54	9.65	10.97	12.51	14.31	16.40
	P							4.46	4.53	4.59	4.64	4.70	4.74
	Q	125℃					7.83	8.88	10.11	11.55	13.22	15.18	17.43
	P						4.08	4.15	4.21	4.26	4.32	4.36	4.41
	Q	120℃				7.11	8.10	9.24	10.58	12.14	13.95	16.05	18.47
	P					3.71	3.79	3.85	3.91	3.96	4.01	4.06	4.10
	Q	115℃			6.39	7.31	8.37	9.61	11.06	12.73	14.68	16.93	19.51
	P				3.37	3.45	3.52	3.58	3.63	3.68	3.72	3.77	3.82
	Q	110℃		5.67	6.53	7.52	8.66	9.99	11.54	13.34	15.42	17.81	20.55
	P			3.06	3.14	3.21	3.27	3.32	3.37	3.41	3.46	3.50	3.55
	Q	105℃	5.28	5.78	6.69	7.74	8.97	10.39	12.04	13.95	16.16	18.70	21.59
	P		2.79	2.84	2.91	2.98	3.03	3.08	3.12	3.17	3.21	3.26	3.31
	Q	100℃	5.38	5.90	6.86	7.98	9.28	10.79	12.54	14.57	16.91	19.59	22.63
	P		2.60	2.64	2.71	2.76	2.81	2.86	2.90	2.94	2.99	3.03	3.09
	Q	95℃	5.49	6.03	7.05	8.22	9.59	11.19	13.04	15.19	17.65	20.47	23.67
	P		2.41	2.45	2.51	2.56	2.61	2.65	2.69	2.73	2.78	2.83	2.89
	Q	90℃	5.62	6.18	7.24	8.47	9.91	11.60	13.55	15.80	18.39	21.35	24.70
	P		2.24	2.28	2.33	2.38	2.42	2.46	2.50	2.54	2.59	2.64	2.70
	Q	85℃	5.75	6.33	7.43	8.72	10.24	12.00	14.05	16.42	19.13	22.22	
	P		2.09	2.12	2.16	2.21	2.25	2.28	2.32	2.37	2.42	2.47	
	Q	80℃	5.89	6.49	7.63	8.98	10.56	12.41	14.55	17.03	19.86		
	P		1.94	1.97	2.01	2.05	2.09	2.12	2.16	2.21	2.26		
	Q	75℃	6.03	6.65	7.84	9.24	10.89	12.81	15.05	17.63			
	P		1.80	1.83	1.87	1.90	1.94	1.98	2.02	2.07			
WH190KB-TFD-GN1	Q	130℃						10.04	11.35	12.90	14.71	16.83	19.29
	P							5.25	5.33	5.40	5.46	5.52	5.58
	Q	125℃					9.21	10.44	11.89	13.58	15.55	17.85	20.50
	P						4.79	4.88	4.95	5.01	5.07	5.13	5.19
	Q	120℃				8.36	9.52	10.87	12.44	14.27	16.40	18.87	21.72
	P					4.37	4.45	4.53	4.60	4.66	4.71	4.77	4.83
	Q	115℃			7.51	8.60	9.85	11.30	13.00	14.98	17.27	19.91	22.94
	P				3.97	4.06	4.14	4.21	4.27	4.32	4.38	4.43	4.49
	Q	110℃		6.67	7.68	8.84	10.19	11.75	13.57	15.69	18.14	20.95	24.17
	P			3.59	3.69	3.77	3.84	3.90	3.96	4.01	4.07	4.12	4.18
	Q	105℃	6.21	6.79	7.87	9.11	10.54	12.21	14.16	16.41	19.01	21.99	25.39
	P		3.28	3.34	3.43	3.50	3.56	3.62	3.67	3.72	3.78	3.83	3.89
	Q	100℃	6.33	6.94	8.07	9.38	10.91	12.68	14.75	17.13	19.88	23.03	26.61
	P		3.05	3.11	3.18	3.25	3.31	3.36	3.41	3.46	3.51	3.57	3.63
	Q	95℃	6.46	7.10	8.29	9.67	11.28	13.16	15.34	17.86	20.76	24.07	27.83
	P		2.84	2.89	2.95	3.01	3.07	3.12	3.16	3.21	3.27	3.33	3.39
	Q	90℃	6.60	7.27	8.51	9.96	11.66	13.64	15.93	18.59	21.63	25.10	29.04
	P		2.64	2.68	2.74	2.80	2.84	2.89	2.94	2.99	3.04	3.11	3.18
	Q	85℃	6.76	7.44	8.74	10.26	12.04	14.12	16.53	19.31	22.50	26.13	
	P		2.45	2.49	2.54	2.59	2.64	2.69	2.73	2.78	2.84	2.91	
	Q	80℃	6.92	7.63	8.98	10.56	12.42	14.59	17.12	20.02	23.35		
	P		2.28	2.31	2.36	2.41	2.45	2.50	2.54	2.60	2.66		
	Q	75℃	7.09	7.82	9.22	10.86	12.80	15.07	17.70	20.73			
	P		2.12	2.15	2.19	2.24	2.28	2.32	2.37	2.43			

制热量基于吸气过热5.0K，过冷5.0K。*Heating Capacity Based on SH 5.0K, SC 5.0K.*

制热量
Heating Capacity

R245fa

型号Model	项目Item (kW)	Tc\Te	22℃	25℃	30℃	35℃	40℃	45℃	50℃	55℃	60℃	65℃	70℃
WH240KB-TFD-GN1	Q	130℃						13.13	14.85	16.87	19.24	22.01	25.23
	P							6.86	6.97	7.06	7.14	7.22	7.30
	Q	125℃					12.05	13.66	15.55	17.76	20.34	23.34	26.81
	P						6.27	6.38	6.47	6.56	6.64	6.71	6.79
	Q	120℃				10.94	12.45	14.21	16.27	18.66	21.45	24.69	28.40
	P					5.71	5.83	5.92	6.01	6.09	6.16	6.24	6.31
	Q	115℃			9.83	11.24	12.88	14.78	17.00	19.59	22.58	26.04	30.00
	P				5.19	5.31	5.41	5.50	5.58	5.65	5.73	5.80	5.87
	Q	110℃		8.72	10.05	11.57	13.33	15.37	17.75	20.52	23.72	27.40	31.61
	P			4.70	4.82	4.93	5.02	5.10	5.18	5.25	5.32	5.39	5.46
	Q	105℃	8.12	8.89	10.29	11.91	13.79	15.97	18.52	21.46	24.86	28.76	33.21
	P		4.30	4.37	4.48	4.58	4.66	4.74	4.80	4.87	4.94	5.01	5.09
	Q	100℃	8.28	9.07	10.56	12.27	14.27	16.59	19.29	22.41	26.01	30.12	34.81
	P		4.00	4.06	4.16	4.25	4.32	4.39	4.46	4.52	4.59	4.67	4.75
	Q	95℃	8.45	9.28	10.84	12.64	14.75	17.21	20.06	23.36	27.15	31.48	36.40
	P		3.71	3.77	3.86	3.94	4.01	4.08	4.14	4.20	4.27	4.35	4.44
	Q	90℃	8.64	9.50	11.13	13.03	15.25	17.83	20.84	24.31	28.29	32.83	37.98
	P		3.45	3.51	3.59	3.66	3.72	3.78	3.84	3.91	3.98	4.06	4.16
	Q	85℃	8.84	9.74	11.43	13.42	15.75	18.46	21.61	25.25	29.42	34.17	
	P		3.21	3.26	3.33	3.39	3.45	3.51	3.57	3.64	3.72	3.80	
	Q	80℃	9.05	9.98	11.74	13.81	16.25	19.09	22.39	26.19	30.55		
	P		2.98	3.02	3.09	3.15	3.21	3.27	3.33	3.40	3.48		
	Q	75℃	9.28	10.23	12.05	14.21	16.74	19.71	23.15	27.12			
	P		2.77	2.81	2.87	2.93	2.98	3.04	3.10	3.18			
WH280KB-TFD-GN1	Q	130℃						15.08	17.05	19.37	22.10	25.28	28.98
	P							7.88	8.00	8.11	8.21	8.30	8.38
	Q	125℃					13.84	15.69	17.86	20.40	23.36	26.81	30.80
	P						7.20	7.33	7.44	7.53	7.62	7.71	7.80
	Q	120℃				12.57	14.30	16.32	18.68	21.44	24.64	28.36	32.63
	P					6.56	6.69	6.80	6.91	7.00	7.08	7.16	7.25
	Q	115℃			11.29	12.91	14.79	16.98	19.53	22.50	25.94	29.91	34.47
	P				5.96	6.10	6.21	6.32	6.41	6.50	6.58	6.66	6.74
	Q	110℃		10.02	11.54	13.29	15.31	17.66	20.39	23.57	27.25	31.47	36.31
	P			5.40	5.54	5.66	5.77	5.86	5.95	6.03	6.11	6.19	6.28
	Q	105℃	9.33	10.21	11.82	13.68	15.84	18.35	21.27	24.65	28.56	33.04	38.15
	P		4.93	5.02	5.15	5.26	5.35	5.44	5.52	5.60	5.67	5.76	5.85
	Q	100℃	9.51	10.42	12.13	14.10	16.39	19.05	22.15	25.74	29.87	34.60	39.98
	P		4.59	4.67	4.78	4.88	4.97	5.05	5.12	5.20	5.27	5.36	5.45
	Q	95℃	9.70	10.66	12.45	14.52	16.95	19.77	23.04	26.83	31.19	36.16	41.81
	P		4.27	4.34	4.44	4.53	4.61	4.68	4.75	4.83	4.91	5.00	5.10
	Q	90℃	9.92	10.92	12.78	14.97	17.51	20.49	23.94	27.92	32.50	37.71	43.63
	P		3.97	4.03	4.12	4.20	4.27	4.34	4.42	4.49	4.57	4.67	4.78
	Q	85℃	10.15	11.18	13.13	15.41	18.09	21.21	24.83	29.01	33.80	39.26	
	P		3.69	3.74	3.82	3.90	3.97	4.04	4.11	4.18	4.27	4.37	
	Q	80℃	10.40	11.46	13.49	15.87	18.66	21.92	25.71	30.08	35.09		
	P		3.42	3.47	3.55	3.62	3.68	3.75	3.82	3.90	4.00		
	Q	75℃	10.66	11.75	13.84	16.32	19.23	22.64	26.59	31.15			
	P		3.18	3.23	3.30	3.36	3.42	3.49	3.57	3.65			

制热量基于吸气过热5.0K，过冷5.0K。*Heating Capacity Based on SH 5.0K, SC 5.0K.*

R245fa

制热量
Heating Capacity

型号Model	项目Item (kW)	Tc\Te	22℃	25℃	30℃	35℃	40℃	45℃	50℃	55℃	60℃	65℃	70℃
WH360KB-TFD-GN1	Q	130℃						19.68	22.25	25.27	28.83	32.98	37.80
	P							10.28	10.44	10.58	10.70	10.82	10.94
	Q	125℃					18.05	20.47	23.30	26.61	30.48	34.98	40.18
	P						9.39	9.56	9.70	9.83	9.95	10.06	10.17
	Q	120℃				16.39	18.66	21.29	24.37	27.97	32.15	36.99	42.56
	P					8.56	8.73	8.88	9.01	9.13	9.24	9.35	9.46
	Q	115℃			14.72	16.85	19.30	22.15	25.48	29.35	33.84	39.02	44.96
	P				7.78	7.95	8.11	8.24	8.36	8.47	8.58	8.69	8.80
	Q	110℃		13.07	15.06	17.33	19.97	23.03	26.60	30.75	35.54	41.06	47.36
	P			7.04	7.23	7.39	7.53	7.65	7.76	7.86	7.97	8.07	8.19
	Q	105℃	12.17	13.32	15.42	17.85	20.66	23.94	27.75	32.16	37.25	43.10	49.76
	P		6.44	6.55	6.71	6.86	6.98	7.10	7.20	7.30	7.40	7.51	7.63
	Q	100℃	12.40	13.60	15.82	18.39	21.38	24.86	28.90	33.58	38.97	45.14	52.16
	P		5.99	6.09	6.24	6.36	6.48	6.58	6.68	6.78	6.88	6.99	7.12
	Q	95℃	12.66	13.91	16.24	18.95	22.11	25.79	30.06	35.00	40.68	47.17	54.55
	P		5.57	5.66	5.79	5.90	6.01	6.11	6.20	6.30	6.40	6.52	6.65
	Q	90℃	12.94	14.24	16.68	19.52	22.85	26.72	31.23	36.42	42.39	49.20	56.92
	P		5.17	5.25	5.37	5.48	5.58	5.67	5.76	5.86	5.97	6.09	6.23
	Q	85℃	13.25	14.59	17.13	20.11	23.59	27.66	32.39	37.84	44.09	51.21	
	P		4.81	4.88	4.99	5.08	5.17	5.26	5.36	5.46	5.57	5.70	
	Q	80℃	13.57	14.96	17.59	20.70	24.34	28.60	33.54	39.24	45.77		
	P		4.47	4.53	4.63	4.72	4.81	4.89	4.99	5.09	5.21		
	Q	75℃	13.90	15.33	18.06	21.29	25.09	29.53	34.69	40.63			
	P		4.15	4.21	4.30	4.38	4.47	4.56	4.65	4.76			
WH470KB-TWD-GN1	Q	130℃						25.69	29.05	33.00	37.64	43.06	49.36
	P							13.42	13.63	13.81	13.98	14.13	14.28
	Q	125℃					23.57	26.73	30.42	34.74	39.80	45.67	52.46
	P						12.27	12.48	12.67	12.83	12.99	13.13	13.28
	Q	120℃				21.41	24.36	27.81	31.83	36.52	41.98	48.30	55.58
	P					11.18	11.40	11.59	11.76	11.92	12.06	12.20	12.35
	Q	115℃			19.22	22.00	25.20	28.92	33.27	38.32	44.18	50.95	58.71
	P				10.16	10.39	10.59	10.76	10.92	11.06	11.20	11.34	11.49
	Q	110℃		17.06	19.66	22.63	26.07	30.08	34.74	40.15	46.41	53.61	61.84
	P			9.20	9.44	9.65	9.83	9.99	10.13	10.27	10.40	10.54	10.69
	Q	105℃	15.90	17.39	20.14	23.31	26.98	31.26	36.23	41.99	48.64	56.27	64.98
	P		8.41	8.55	8.77	8.95	9.12	9.26	9.40	9.53	9.67	9.81	9.96
	Q	100℃	16.19	17.75	20.66	24.01	27.91	32.46	37.74	43.85	50.88	58.94	68.11
	P		7.82	7.95	8.14	8.31	8.46	8.59	8.72	8.85	8.98	9.13	9.29
	Q	95℃	16.53	18.16	21.20	24.74	28.87	33.67	39.25	45.70	53.12	61.60	71.22
	P		7.27	7.38	7.56	7.71	7.85	7.97	8.10	8.22	8.36	8.51	8.68
	Q	90℃	16.90	18.59	21.78	25.49	29.83	34.90	40.77	47.56	55.35	64.24	74.32
	P		6.75	6.86	7.02	7.15	7.28	7.40	7.52	7.65	7.79	7.95	8.14
	Q	85℃	17.30	19.05	22.37	26.26	30.81	36.12	42.29	49.41	57.57	66.87	
	P		6.28	6.37	6.51	6.64	6.76	6.87	6.99	7.13	7.27	7.44	
	Q	80℃	17.72	19.53	22.97	27.03	31.79	37.35	43.80	51.24	59.77		
	P		5.83	5.92	6.04	6.16	6.27	6.39	6.51	6.65	6.81		
	Q	75℃	18.15	20.02	23.58	27.80	32.76	38.56	45.29	53.05			
	P		5.42	5.50	5.61	5.72	5.83	5.95	6.08	6.22			

制热量基于吸气过热5.0K，过冷5.0K。*Heating Capacity Based on SH 5.0K, SC 5.0K.*

制热量
Heating Capacity

R245fa

型号Model	项目Item (kW)	Tc\Te	22℃	25℃	30℃	35℃	40℃	45℃	50℃	55℃	60℃	65℃	70℃
WH600KB-TWD-GN1	Q	130℃						31.62	35.75	40.62	46.33	53.00	60.75
	P							16.52	16.78	17.00	17.20	17.39	17.57
	Q	125℃					29.01	32.89	37.44	42.76	48.98	56.21	64.57
	P						15.10	15.36	15.59	15.79	15.98	16.16	16.34
	Q	120℃				26.35	29.99	34.22	39.17	44.95	51.67	59.45	68.40
	P					13.76	14.03	14.27	14.48	14.67	14.85	15.02	15.20
	Q	115℃			23.66	27.07	31.01	35.60	40.94	47.17	54.38	62.71	72.25
	P				12.50	12.78	13.03	13.24	13.44	13.62	13.79	13.96	14.14
	Q	110℃		21.00	24.20	27.86	32.09	37.02	42.75	49.42	57.12	65.98	76.11
	P			11.32	11.62	11.87	12.09	12.29	12.47	12.64	12.80	12.97	13.16
	Q	105℃	19.56	21.40	24.79	28.68	33.21	38.47	44.59	51.68	59.87	69.26	79.97
	P		10.35	10.53	10.79	11.02	11.22	11.40	11.57	11.73	11.90	12.07	12.26
	Q	100℃	19.93	21.85	25.42	29.55	34.35	39.95	46.44	53.97	62.62	72.54	83.82
	P		9.62	9.78	10.02	10.23	10.41	10.58	10.74	10.89	11.06	11.24	11.44
	Q	95℃	20.34	22.35	26.10	30.45	35.53	41.44	48.31	56.25	65.38	75.81	87.66
	P		8.94	9.09	9.30	9.49	9.66	9.81	9.97	10.12	10.29	10.48	10.69
	Q	90℃	20.80	22.88	26.80	31.37	36.72	42.95	50.18	58.54	68.13	79.07	91.47
	P		8.31	8.44	8.63	8.80	8.96	9.11	9.26	9.42	9.59	9.79	10.01
	Q	85℃	21.29	23.45	27.53	32.31	37.92	44.46	52.05	60.81	70.85	82.30	
	P		7.73	7.84	8.01	8.17	8.32	8.46	8.61	8.77	8.95	9.16	
	Q	80℃	21.80	24.03	28.27	33.26	39.12	45.96	53.91	63.07	73.56		
	P		7.18	7.28	7.44	7.58	7.72	7.86	8.02	8.18	8.38		
	Q	75℃	22.34	24.64	29.02	34.21	40.32	47.46	55.75	65.30			
	P		6.67	6.77	6.91	7.04	7.18	7.32	7.48	7.66			

制热量基于吸气过热5.0K，过冷5.0K。*Heating Capacity Based on SH 5.0K, SC 5.0K.*

EVI-R245fa

制热量
Heating Capacity

型号Model	项目Item (kW)	Tc\Te	22℃	25℃	30℃	35℃	40℃	45℃	50℃	55℃	60℃	65℃	70℃
WH70KB-TFD-GV1	Q	130℃						4.69	5.36	6.14	7.04	8.10	9.32
	P							2.24	2.30	2.35	2.39	2.43	2.47
	Q	125℃					4.18	4.77	5.45	6.25	7.18	8.26	9.51
	P						2.06	2.11	2.15	2.19	2.23	2.26	2.28
	Q	120℃				3.73	4.26	4.86	5.57	6.39	7.34	8.45	9.73
	P					1.88	1.93	1.97	2.01	2.04	2.06	2.08	2.11
	Q	115℃			3.33	3.81	4.35	4.98	5.70	6.54	7.52	8.66	9.98
	P				1.72	1.76	1.80	1.83	1.86	1.88	1.90	1.92	1.93
	Q	110℃		2.95	3.40	3.90	4.46	5.10	5.85	6.72	7.73	8.90	10.25
	P			1.56	1.61	1.64	1.67	1.70	1.71	1.73	1.75	1.76	1.77
	Q	105℃	2.77	3.03	3.49	4.00	4.58	5.24	6.01	6.91	7.95	9.16	10.55
	P		1.44	1.46	1.49	1.52	1.54	1.56	1.58	1.59	1.60	1.61	1.62
	Q	100℃	2.84	3.11	3.58	4.11	4.71	5.39	6.19	7.12	8.19	9.44	10.87
	P		1.34	1.36	1.39	1.41	1.42	1.44	1.45	1.46	1.47	1.48	1.49
	Q	95℃	2.91	3.19	3.68	4.23	4.85	5.56	6.38	7.34	8.45	9.74	11.21
	P		1.24	1.26	1.28	1.30	1.31	1.32	1.33	1.34	1.35	1.36	1.37
	Q	90℃	2.99	3.27	3.78	4.35	4.99	5.73	6.59	7.58	8.73	10.06	11.58
	P		1.15	1.16	1.18	1.20	1.21	1.22	1.22	1.23	1.24	1.26	1.28
	Q	85℃	3.06	3.36	3.89	4.48	5.15	5.92	6.81	7.84	9.03	10.40	
	P		1.07	1.08	1.09	1.11	1.12	1.13	1.14	1.15	1.16	1.18	
	Q	80℃	3.14	3.44	3.99	4.61	5.31	6.11	7.04	8.11	9.34		
	P		0.99	1.00	1.02	1.03	1.04	1.06	1.07	1.08	1.10		
	Q	75℃	3.21	3.53	4.10	4.75	5.48	6.32	7.28	8.39			
	P		0.93	0.94	0.96	0.97	0.99	1.00	1.02	1.04			
WH120KB-TFD-GV1	Q	130℃						7.83	8.95	10.25	11.76	13.52	15.57
	P							3.74	3.84	3.92	4.00	4.06	4.12
	Q	125℃					6.97	7.96	9.11	10.44	11.99	13.80	15.89
	P						3.43	3.52	3.60	3.66	3.72	3.77	3.82
	Q	120℃				6.22	7.11	8.12	9.30	10.67	12.26	14.11	16.26
	P					3.14	3.22	3.29	3.35	3.40	3.44	3.48	3.52
	Q	115℃			5.55	6.36	7.27	8.31	9.52	10.92	12.56	14.47	16.67
	P				2.87	2.94	3.01	3.06	3.10	3.14	3.17	3.20	3.23
	Q	110℃		4.93	5.69	6.51	7.45	8.52	9.77	11.22	12.90	14.86	17.12
	P			2.61	2.68	2.74	2.79	2.83	2.86	2.89	2.91	2.94	2.96
	Q	105℃	4.62	5.06	5.83	6.68	7.64	8.75	10.04	11.54	13.28	15.29	17.61
	P		2.40	2.44	2.50	2.54	2.58	2.61	2.63	2.65	2.67	2.69	2.71
	Q	100℃	4.74	5.19	5.98	6.86	7.86	9.01	10.34	11.89	13.68	15.76	18.15
	P		2.24	2.27	2.31	2.35	2.38	2.40	2.42	2.43	2.45	2.46	2.48
	Q	95℃	4.87	5.33	6.15	7.06	8.09	9.28	10.66	12.26	14.12	16.26	18.72
	P		2.08	2.10	2.14	2.17	2.19	2.20	2.22	2.23	2.25	2.27	2.29
	Q	90℃	4.99	5.47	6.32	7.26	8.34	9.57	11.01	12.66	14.58	16.80	19.33
	P		1.92	1.95	1.97	2.00	2.01	2.03	2.05	2.06	2.08	2.10	2.13
	Q	85℃	5.12	5.61	6.49	7.48	8.60	9.88	11.37	13.09	15.08	17.36	
	P		1.78	1.80	1.83	1.85	1.87	1.88	1.90	1.92	1.94	1.97	
	Q	80℃	5.24	5.75	6.67	7.70	8.87	10.21	11.76	13.54	15.60		
	P		1.66	1.68	1.70	1.72	1.74	1.76	1.78	1.81	1.84		
	Q	75℃	5.36	5.89	6.85	7.93	9.15	10.55	12.16	14.01			
	P		1.56	1.57	1.60	1.62	1.65	1.68	1.71	1.74			

制热量基于吸气过热5.0K，过冷5.0K。*Heating Capacity Based on SH 5.0K, SC 5.0K.*

制热量
Heating Capacity

R245fa-EVI

型号Model	项目Item (kW)	Tc\Te	22℃	25℃	30℃	35℃	40℃	45℃	50℃	55℃	60℃	65℃	70℃
WH160KB-TFD-GV1	Q	130℃						10.01	11.43	13.10	15.03	17.29	19.90
	P							4.79	4.91	5.02	5.11	5.19	5.27
	Q	125℃					8.91	10.18	11.64	13.34	15.33	17.63	20.31
	P						4.39	4.50	4.60	4.68	4.75	4.82	4.88
	Q	120℃				7.95	9.09	10.38	11.88	13.63	15.67	18.04	20.78
	P					4.01	4.12	4.21	4.28	4.35	4.40	4.45	4.49
	Q	115℃			7.10	8.13	9.29	10.62	12.16	13.96	16.06	18.49	21.30
	P				3.66	3.76	3.84	3.91	3.97	4.01	4.06	4.09	4.13
	Q	110℃		6.30	7.27	8.32	9.52	10.89	12.48	14.33	16.49	18.99	21.88
	P			3.34	3.43	3.50	3.57	3.62	3.66	3.69	3.72	3.75	3.78
	Q	105℃	5.90	6.46	7.45	8.54	9.77	11.19	12.83	14.74	16.97	19.54	22.51
	P		3.07	3.12	3.19	3.25	3.30	3.33	3.37	3.39	3.41	3.44	3.46
	Q	100℃	6.06	6.63	7.65	8.77	10.05	11.51	13.21	15.19	17.49	20.14	23.20
	P		2.86	2.90	2.96	3.00	3.04	3.07	3.09	3.11	3.13	3.15	3.17
	Q	95℃	6.22	6.81	7.86	9.02	10.34	11.86	13.63	15.67	18.04	20.78	23.93
	P		2.65	2.69	2.73	2.77	2.80	2.82	2.84	2.85	2.87	2.90	2.93
	Q	90℃	6.38	6.99	8.07	9.28	10.66	12.24	14.07	16.19	18.64	21.47	24.71
	P		2.46	2.49	2.52	2.55	2.58	2.60	2.61	2.63	2.66	2.69	2.72
	Q	85℃	6.54	7.17	8.30	9.56	10.99	12.63	14.53	16.73	19.27	22.19	
	P		2.28	2.30	2.34	2.36	2.38	2.40	2.43	2.45	2.48	2.52	
	Q	80℃	6.69	7.35	8.53	9.84	11.33	13.05	15.02	17.31	19.94		
	P		2.12	2.14	2.17	2.20	2.23	2.25	2.28	2.31	2.36		
	Q	75℃	6.85	7.53	8.76	10.13	11.69	13.48	15.54	17.91			
	P		1.99	2.01	2.05	2.08	2.11	2.14	2.18	2.23			
WH190KB-TFD-GV1	Q	130℃						11.77	13.45	15.40	17.68	20.33	23.40
	P							5.63	5.77	5.90	6.01	6.11	6.20
	Q	125℃					10.48	11.97	13.69	15.69	18.02	20.74	23.88
	P						5.16	5.29	5.41	5.50	5.59	5.67	5.73
	Q	120℃				9.35	10.69	12.21	13.97	16.03	18.43	21.21	24.43
	P					4.72	4.84	4.95	5.04	5.11	5.17	5.23	5.28
	Q	115℃			8.35	9.56	10.92	12.49	14.30	16.42	18.88	21.74	25.05
	P				4.31	4.42	4.52	4.60	4.67	4.72	4.77	4.81	4.85
	Q	110℃		7.41	8.55	9.79	11.19	12.81	14.68	16.86	19.39	22.33	25.73
	P			3.92	4.03	4.12	4.19	4.25	4.30	4.34	4.38	4.41	4.44
	Q	105℃	6.94	7.60	8.76	10.04	11.49	13.16	15.09	17.34	19.95	22.98	26.47
	P		3.60	3.67	3.75	3.82	3.88	3.92	3.96	3.99	4.01	4.04	4.07
	Q	100℃	7.13	7.80	8.99	10.31	11.81	13.54	15.54	17.86	20.56	23.68	27.28
	P		3.36	3.41	3.48	3.53	3.57	3.61	3.63	3.66	3.68	3.70	3.73
	Q	95℃	7.31	8.01	9.24	10.61	12.16	13.95	16.02	18.43	21.22	24.44	28.14
	P		3.12	3.16	3.21	3.25	3.29	3.31	3.34	3.36	3.38	3.41	3.44
	Q	90℃	7.50	8.22	9.49	10.91	12.53	14.39	16.54	19.03	21.92	25.24	29.06
	P		2.89	2.92	2.97	3.00	3.03	3.05	3.07	3.10	3.12	3.16	3.20
	Q	85℃	7.69	8.43	9.76	11.24	12.92	14.85	17.09	19.68	22.66	26.10	
	P		2.68	2.71	2.75	2.78	2.80	2.83	2.85	2.88	2.92	2.96	
	Q	80℃	7.87	8.64	10.03	11.57	13.33	15.34	17.67	20.35	23.44		
	P		2.49	2.52	2.56	2.59	2.62	2.65	2.68	2.72	2.77		
	Q	75℃	8.05	8.86	10.30	11.91	13.75	15.85	18.27	21.06			
	P		2.34	2.37	2.40	2.44	2.48	2.52	2.56	2.62			

制热量基于吸气过热5.0K，过冷5.0K。*Heating Capacity Based on SH 5.0K, SC 5.0K.*

EVI-R245fa

制热量
Heating Capacity

型号Model	项目Item (kW)	Tc\Te	22℃	25℃	30℃	35℃	40℃	45℃	50℃	55℃	60℃	65℃	70℃
WH240KB-TFD-GV1	Q	130℃						15.39	17.59	20.14	23.12	26.59	30.60
	P							7.36	7.55	7.71	7.86	7.99	8.11
	Q	125℃					13.71	15.65	17.90	20.52	23.57	27.12	31.23
	P						6.75	6.92	7.07	7.20	7.31	7.41	7.50
	Q	120℃				12.23	13.97	15.97	18.28	20.96	24.10	27.74	31.95
	P					6.17	6.33	6.47	6.59	6.68	6.77	6.84	6.91
	Q	115℃			10.92	12.50	14.29	16.33	18.71	21.47	24.70	28.44	32.76
	P				5.64	5.78	5.91	6.01	6.10	6.17	6.24	6.29	6.35
	Q	110℃		9.70	11.18	12.80	14.64	16.75	19.20	22.05	25.36	29.21	33.65
	P			5.13	5.27	5.39	5.49	5.56	5.63	5.68	5.73	5.77	5.81
	Q	105℃	9.08	9.94	11.46	13.13	15.03	17.21	19.73	22.68	26.10	30.06	34.62
	P		4.71	4.79	4.91	5.00	5.07	5.13	5.18	5.21	5.25	5.28	5.32
	Q	100℃	9.32	10.20	11.76	13.49	15.45	17.71	20.32	23.36	26.89	30.98	35.68
	P		4.39	4.46	4.55	4.62	4.67	4.72	4.75	4.78	4.81	4.84	4.88
	Q	95℃	9.56	10.47	12.08	13.87	15.90	18.24	20.96	24.10	27.75	31.96	36.80
	P		4.08	4.13	4.20	4.26	4.30	4.33	4.36	4.39	4.42	4.46	4.50
	Q	90℃	9.81	10.75	12.42	14.27	16.39	18.82	21.63	24.90	28.67	33.01	38.00
	P		3.78	3.82	3.88	3.92	3.96	3.99	4.02	4.05	4.09	4.13	4.19
	Q	85℃	10.05	11.03	12.76	14.70	16.90	19.43	22.35	25.73	29.64	34.13	
	P		3.51	3.54	3.59	3.63	3.67	3.70	3.73	3.77	3.82	3.88	
	Q	80℃	10.30	11.31	13.11	15.13	17.43	20.07	23.11	26.62	30.66		
	P		3.26	3.30	3.34	3.38	3.42	3.46	3.51	3.56	3.62		
	Q	75℃	10.53	11.58	13.47	15.58	17.98	20.73	23.90	27.54			
	P		3.06	3.09	3.15	3.19	3.24	3.29	3.35	3.43			
WH280KB-TFD-GV1	P	130℃						17.68	20.20	23.14	26.56	30.54	35.15
	Q							8.46	8.67	8.86	9.03	9.18	9.31
	P	125℃					15.74	17.98	20.56	23.57	27.08	31.15	35.88
	Q						7.75	7.95	8.12	8.27	8.40	8.51	8.62
	P	120℃				14.05	16.05	18.34	20.99	24.08	27.68	31.86	36.70
	Q					7.09	7.28	7.43	7.56	7.68	7.77	7.86	7.94
	P	115℃			12.54	14.36	16.41	18.76	21.49	24.67	28.37	32.66	37.63
	Q				6.47	6.65	6.79	6.91	7.01	7.09	7.17	7.23	7.29
	P	110℃		11.14	12.84	14.71	16.82	19.24	22.05	25.32	29.13	33.55	38.66
	Q			5.89	6.06	6.19	6.30	6.39	6.47	6.53	6.58	6.63	6.68
	P	105℃	10.43	11.42	13.16	15.09	17.26	19.76	22.67	26.05	29.98	34.53	39.77
	Q		5.42	5.51	5.64	5.74	5.82	5.89	5.95	5.99	6.03	6.07	6.11
	P	100℃	10.71	11.72	13.51	15.50	17.75	20.34	23.34	26.84	30.89	35.58	40.98
	Q		5.05	5.12	5.22	5.30	5.37	5.42	5.46	5.49	5.53	5.56	5.61
	P	95℃	10.99	12.03	13.88	15.93	18.27	20.96	24.07	27.69	31.88	36.72	42.28
	Q		4.69	4.75	4.83	4.89	4.94	4.98	5.01	5.04	5.08	5.12	5.17
	P	90℃	11.27	12.34	14.26	16.40	18.82	21.62	24.85	28.60	32.93	37.92	43.65
	Q		4.34	4.39	4.46	4.51	4.55	4.58	4.62	4.65	4.69	4.74	4.81
	P	85℃	11.55	12.66	14.66	16.88	19.41	22.32	25.68	29.56	34.05	39.20	
	Q		4.03	4.07	4.13	4.17	4.21	4.25	4.29	4.33	4.38	4.45	
	P	80℃	11.83	12.99	15.06	17.38	20.02	23.05	26.54	30.58	35.22		
	Q		3.75	3.79	3.84	3.89	3.93	3.98	4.03	4.09	4.16		
	P	75℃	12.10	13.31	15.47	17.90	20.65	23.81	27.45	31.64			
	Q		3.52	3.55	3.61	3.67	3.72	3.78	3.85	3.93			

制热量基于吸气过热5.0K，过冷5.0K。*Heating Capacity Based on SH 5.0K, SC 5.0K.*

制热量
Heating Capacity

R245fa-EVI

型号Model	项目Item (kW)	Tc\Te	22℃	25℃	30℃	35℃	40℃	45℃	50℃	55℃	60℃	65℃	70℃
WH360KB-TFD-GV1	Q	130℃						23.06	26.35	30.18	34.65	39.84	45.85
	P							11.03	11.31	11.56	11.78	11.97	12.15
	Q	125℃					20.54	23.45	26.82	30.75	35.32	40.64	46.80
	P						10.11	10.37	10.60	10.79	10.96	11.11	11.24
	Q	120℃				18.33	20.94	23.93	27.39	31.42	36.11	41.57	47.88
	P					9.25	9.49	9.70	9.87	10.02	10.14	10.25	10.36
	Q	115℃			16.36	18.73	21.41	24.48	28.04	32.18	37.01	42.61	49.09
	P				8.44	8.67	8.86	9.01	9.14	9.25	9.35	9.43	9.51
	Q	110℃		14.53	16.75	19.18	21.94	25.10	28.77	33.04	38.01	43.77	50.43
	P			7.69	7.90	8.08	8.22	8.34	8.43	8.52	8.58	8.65	8.71
	Q	105℃	13.61	14.90	17.17	19.68	22.52	25.78	29.57	33.98	39.11	45.04	51.88
	P		7.06	7.18	7.35	7.49	7.60	7.69	7.76	7.81	7.87	7.92	7.97
	Q	100℃	13.97	15.29	17.63	20.21	23.15	26.53	30.45	35.01	40.30	46.42	53.46
	P		6.59	6.68	6.81	6.92	7.00	7.07	7.12	7.16	7.21	7.26	7.31
	Q	95℃	14.33	15.69	18.10	20.79	23.83	27.34	31.40	36.12	41.59	47.90	55.15
	P		6.11	6.19	6.30	6.38	6.44	6.49	6.54	6.58	6.62	6.68	6.74
	Q	90℃	14.70	16.10	18.60	21.39	24.56	28.20	32.42	37.31	42.96	49.47	56.95
	P		5.67	5.73	5.81	5.88	5.94	5.98	6.02	6.07	6.12	6.19	6.27
	Q	85℃	15.07	16.52	19.12	22.02	25.32	29.11	33.49	38.56	44.41	51.14	
	P		5.25	5.31	5.38	5.44	5.49	5.54	5.59	5.65	5.72	5.81	
	Q	80℃	15.43	16.94	19.65	22.68	26.12	30.07	34.63	39.89	45.95		
	P		4.89	4.94	5.01	5.07	5.13	5.19	5.26	5.33	5.43		
	Q	75℃	15.78	17.36	20.19	23.35	26.94	31.06	35.81	41.27			
	P		4.59	4.64	4.71	4.79	4.86	4.94	5.03	5.13			
WH470KB-TWD-GV1	Q	130℃						30.11	34.41	39.41	45.24	52.02	59.87
	P							14.40	14.77	15.09	15.38	15.63	15.86
	Q	125℃					26.82	30.62	35.03	40.15	46.12	53.07	61.11
	P						13.21	13.54	13.84	14.09	14.31	14.50	14.68
	Q	120℃				23.94	27.34	31.24	35.76	41.02	47.15	54.28	62.52
	P					12.08	12.39	12.66	12.88	13.08	13.24	13.39	13.52
	Q	115℃			21.36	24.46	27.95	31.96	36.61	42.02	48.32	55.64	64.10
	P				11.03	11.32	11.56	11.77	11.94	12.08	12.20	12.31	12.42
	Q	110℃		18.97	21.87	25.05	28.64	32.77	37.56	43.14	49.63	57.15	65.84
	P			10.04	10.32	10.55	10.73	10.89	11.01	11.12	11.21	11.29	11.37
	Q	105℃	17.77	19.45	22.42	25.70	29.40	33.67	38.61	44.37	51.06	58.81	67.75
	P		9.22	9.38	9.60	9.78	9.92	10.03	10.13	10.20	10.27	10.34	10.41
	Q	100℃	18.24	19.96	23.01	26.40	30.23	34.64	39.76	45.71	52.62	60.61	69.81
	P		8.60	8.72	8.90	9.03	9.14	9.23	9.30	9.36	9.41	9.48	9.55
	Q	95℃	18.71	20.49	23.64	27.14	31.12	35.70	41.00	47.16	54.30	62.54	72.01
	P		7.98	8.08	8.22	8.33	8.41	8.48	8.54	8.59	8.65	8.72	8.80
	Q	90℃	19.19	21.03	24.29	27.93	32.06	36.82	42.33	48.71	56.09	64.60	74.36
	P		7.40	7.48	7.59	7.68	7.75	7.81	7.87	7.92	7.99	8.08	8.19
	Q	85℃	19.67	21.57	24.97	28.75	33.06	38.01	43.73	50.35	57.99	66.78	
	P		6.86	6.93	7.03	7.11	7.17	7.24	7.30	7.38	7.47	7.58	
	Q	80℃	20.15	22.12	25.66	29.61	34.10	39.26	45.21	52.08	59.99		
	P		6.38	6.45	6.54	6.62	6.70	6.78	6.86	6.96	7.09		
	Q	75℃	20.61	22.67	26.36	30.49	35.18	40.56	46.76	53.89			
	P		5.99	6.05	6.15	6.25	6.34	6.45	6.56	6.70			

制热量基于吸气过热5.0K，过冷5.0K。*Heating Capacity Based on SH 5.0K, SC 5.0K.*

EVI-R245fa

制热量
Heating Capacity

型号Model	项目Item (kW)	Tc\Te	22℃	25℃	30℃	35℃	40℃	45℃	50℃	55℃	60℃	65℃	70℃
WH600KB-TWD-GV1	Q	130℃						37.06	42.35	48.51	55.68	64.02	73.69
	P							17.73	18.18	18.58	18.93	19.24	19.52
	Q	125℃					33.01	37.69	43.11	49.42	56.77	65.31	75.21
	P						16.25	16.67	17.03	17.34	17.61	17.85	18.06
	Q	120℃				29.46	33.65	38.45	44.01	50.49	58.03	66.80	76.95
	P					14.87	15.25	15.58	15.86	16.10	16.30	16.48	16.64
	Q	115℃			26.29	30.11	34.40	39.34	45.05	51.71	59.47	68.48	78.89
	P				13.57	13.93	14.23	14.48	14.69	14.87	15.02	15.16	15.28
	Q	110℃		23.35	26.91	30.83	35.25	40.33	46.23	53.09	61.08	70.34	81.04
	P			12.35	12.70	12.98	13.21	13.40	13.56	13.68	13.80	13.90	14.00
	Q	105℃	21.87	23.94	27.60	31.63	36.19	41.44	47.53	54.61	62.84	72.38	83.38
	P		11.35	11.54	11.82	12.03	12.21	12.35	12.46	12.56	12.64	12.73	12.82
	Q	100℃	22.44	24.57	28.33	32.49	37.21	42.64	48.94	56.26	64.76	74.60	85.91
	P		10.58	10.74	10.95	11.12	11.25	11.35	11.44	11.51	11.59	11.66	11.75
	Q	95℃	23.03	25.22	29.09	33.41	38.30	43.94	50.47	58.05	66.83	76.97	88.63
	P		9.83	9.95	10.12	10.25	10.35	10.43	10.51	10.57	10.64	10.73	10.84
	Q	90℃	23.62	25.88	29.90	34.38	39.46	45.32	52.10	59.95	69.04	79.51	91.52
	P		9.11	9.21	9.34	9.45	9.54	9.61	9.68	9.75	9.84	9.95	10.08
	Q	85℃	24.21	26.55	30.73	35.39	40.69	46.78	53.83	61.97	71.38	82.19	
	P		8.44	8.53	8.65	8.75	8.83	8.91	8.99	9.08	9.19	9.33	
	Q	80℃	24.80	27.23	31.58	36.44	41.97	48.32	55.65	64.10	73.84		
	P		7.86	7.94	8.05	8.15	8.24	8.34	8.45	8.57	8.72		
	Q	75℃	25.36	27.90	32.44	37.52	43.30	49.92	57.55	66.33			
	P		7.37	7.45	7.57	7.69	7.81	7.93	8.08	8.25			

制热量基于吸气过热5.0K，过冷5.0K。*Heating Capacity Based on SH 5.0K, SC 5.0K.*

型号Model	项目Item (kW)	Tc\Te	40℃	45℃	50℃	55℃	60℃	65℃	70℃
WH70KB-TFD-GN1	Q	155℃				3.22	3.54	4.00	4.68
	P					3.12	3.17	3.22	3.26
	Q	150℃				3.44	3.80	4.30	5.01
	P					2.90	2.95	2.99	3.03
	Q	145℃			3.36	3.68	4.07	4.60	5.34
	P				2.64	2.69	2.73	2.78	2.82
	Q	140℃			3.56	3.92	4.35	4.91	5.67
	P				2.45	2.50	2.54	2.58	2.62
	Q	135℃		3.39	3.77	4.16	4.62	5.21	5.99
	P			2.23	2.28	2.32	2.36	2.40	2.44
	Q	130℃		3.57	3.99	4.41	4.89	5.50	6.31
	P			2.07	2.12	2.16	2.20	2.24	2.28
	Q	125℃		3.75	4.20	4.65	5.16	5.79	6.61
	P			1.93	1.97	2.01	2.05	2.09	2.14
	Q	120℃	3.37	3.93	4.41	4.89	5.41	6.06	6.90
	P		1.75	1.80	1.84	1.88	1.92	1.96	2.00
	Q	115℃	3.52	4.11	4.61	5.11	5.66	6.32	7.17
	P		1.64	1.68	1.72	1.75	1.79	1.84	1.89
	Q	110℃	3.66	4.27	4.81	5.32	5.88	6.56	7.42
	P		1.53	1.57	1.60	1.64	1.68	1.73	1.78
	Q	105℃	3.80	4.43	4.98	5.52	6.09	6.78	7.64
	P		1.43	1.46	1.50	1.54	1.59	1.64	1.69
	Q	100℃	3.92	4.57	5.14	5.69	6.28	6.97	7.83
	P		1.34	1.37	1.41	1.45	1.50	1.55	1.62
	Q	95℃	4.03	4.70	5.28	5.84	6.43	7.13	
	P		1.25	1.29	1.33	1.37	1.42	1.48	
	Q	90℃	4.11	4.80	5.40	5.96	6.56		
	P		1.17	1.21	1.25	1.30	1.35		
	Q	85℃	4.18	4.88	5.49	6.06	6.66		
	P		1.10	1.14	1.18	1.23	1.29		
	Q	80℃	4.22	4.93	5.54	6.12			
	P		1.03	1.07	1.12	1.17			
	Q	75℃	4.23	4.95	5.56	6.14			
	P		0.97	1.01	1.06	1.12			
WH120KB-TFD-GN1	Q	155℃				5.37	5.91	6.69	7.82
	P					5.21	5.30	5.38	5.45
	Q	150℃				5.75	6.35	7.18	8.37
	P					4.84	4.92	4.99	5.06
	Q	145℃			5.60	6.14	6.80	7.69	8.92
	P				4.40	4.49	4.57	4.64	4.71
	Q	140℃			5.95	6.54	7.26	8.20	9.47
	P				4.09	4.17	4.24	4.31	4.38
	Q	135℃		5.65	6.30	6.95	7.72	8.70	10.01
	P			3.72	3.80	3.88	3.95	4.01	4.08
	Q	130℃		5.95	6.66	7.36	8.17	9.19	10.53
	P			3.46	3.54	3.61	3.67	3.74	3.81
	Q	125℃		6.26	7.02	7.77	8.61	9.67	11.04
	P			3.22	3.29	3.36	3.42	3.49	3.57
	Q	120℃	5.64	6.56	7.37	8.16	9.04	10.13	11.52
	P		2.93	3.00	3.07	3.13	3.20	3.27	3.35
	Q	115℃	5.88	6.86	7.70	8.53	9.45	10.56	11.97
	P		2.73	2.80	2.86	2.93	3.00	3.07	3.15
	Q	110℃	6.12	7.14	8.03	8.89	9.83	10.96	12.39
	P		2.55	2.62	2.68	2.74	2.81	2.89	2.98
	Q	105℃	6.34	7.40	8.32	9.21	10.17	11.32	12.76
	P		2.38	2.45	2.51	2.57	2.65	2.73	2.83
	Q	100℃	6.54	7.64	8.59	9.50	10.48	11.64	13.08
	P		2.23	2.29	2.35	2.42	2.50	2.59	2.70
	Q	95℃	6.72	7.85	8.82	9.75	10.75	11.91	
	P		2.09	2.15	2.21	2.29	2.37	2.47	
	Q	90℃	6.87	8.02	9.01	9.96	10.96		
	P		1.96	2.02	2.09	2.16	2.25		
	Q	85℃	6.98	8.15	9.16	10.11	11.12		
	P		1.84	1.90	1.97	2.06	2.15		
	Q	80℃	7.04	8.23	9.25	10.21			
	P		1.73	1.79	1.87	1.96			
	Q	75℃	7.06	8.27	9.29	10.25			
	P		1.62	1.69	1.77	1.87			

制热量基于吸气过热5.0K，过冷5.0K。*Heating Capacity Based on SH 5.0K, SC 5.0K.*

型号Model	项目Item (kW)	Tc\Te	40℃	45℃	50℃	55℃	60℃	65℃	70℃
WH160KB-TFD-GN1	Q	155℃				6.87	7.55	8.55	9.99
	P					6.66	6.77	6.88	6.97
	Q	150℃				7.35	8.11	9.18	10.69
	P					6.18	6.29	6.38	6.47
	Q	145℃			7.16	7.85	8.69	9.83	11.40
	P				5.63	5.74	5.84	5.93	6.01
	Q	140℃			7.60	8.36	9.28	10.47	12.10
	P				5.23	5.33	5.42	5.51	5.60
	Q	135℃		7.23	8.05	8.89	9.86	11.12	12.79
	P			4.75	4.86	4.95	5.04	5.13	5.22
	Q	130℃		7.61	8.51	9.41	10.44	11.75	13.46
	P			4.42	4.52	4.61	4.69	4.78	4.87
	Q	125℃		8.00	8.97	9.93	11.01	12.36	14.11
	P			4.12	4.21	4.29	4.38	4.46	4.56
	Q	120℃	7.20	8.39	9.42	10.43	11.56	12.94	14.72
	P		3.74	3.84	3.92	4.01	4.09	4.18	4.28
	Q	115℃	7.52	8.76	9.85	10.91	12.08	13.50	15.30
	P		3.49	3.58	3.66	3.74	3.83	3.92	4.03
	Q	110℃	7.82	9.12	10.26	11.36	12.56	14.01	15.83
	P		3.26	3.34	3.42	3.51	3.59	3.69	3.81
	Q	105℃	8.11	9.46	10.64	11.77	13.00	14.47	16.31
	P		3.05	3.13	3.21	3.29	3.38	3.49	3.61
	Q	100℃	8.36	9.76	10.98	12.14	13.40	14.88	16.72
	P		2.85	2.93	3.01	3.10	3.20	3.31	3.45
	Q	95℃	8.59	10.03	11.27	12.46	13.73	15.22	
	P		2.67	2.75	2.83	2.92	3.03	3.15	
	Q	90℃	8.78	10.25	11.52	12.73	14.01		
	P		2.50	2.58	2.67	2.77	2.88		
	Q	85℃	8.92	10.42	11.71	12.93	14.21		
	P		2.35	2.43	2.52	2.63	2.75		
	Q	80℃	9.00	10.52	11.83	13.05			
	P		2.21	2.29	2.39	2.50			
	Q	75℃	9.03	10.56	11.88	13.10			
	P		2.07	2.16	2.26	2.39			
WH190KB-TFD-GN1	Q	155℃				8.07	8.88	10.05	11.75
	P					7.83	7.97	8.08	8.19
	Q	150℃				8.64	9.54	10.80	12.57
	P					7.27	7.39	7.50	7.61
	Q	145℃			8.42	9.23	10.22	11.56	13.40
	P				6.62	6.75	6.86	6.97	7.07
	Q	140℃			8.94	9.84	10.91	12.32	14.23
	P				6.15	6.27	6.38	6.48	6.58
	Q	135℃		8.50	9.47	10.45	11.60	13.07	15.04
	P			5.59	5.71	5.83	5.93	6.03	6.13
	Q	130℃		8.95	10.01	11.07	12.28	13.81	15.83
	P			5.20	5.32	5.42	5.52	5.62	5.73
	Q	125℃		9.41	10.55	11.67	12.95	14.53	16.59
	P			4.84	4.95	5.05	5.15	5.25	5.36
	Q	120℃	8.47	9.86	11.07	12.26	13.59	15.22	17.31
	P		4.40	4.51	4.61	4.71	4.81	4.91	5.03
	Q	115℃	8.84	10.31	11.58	12.82	14.20	15.87	17.99
	P		4.10	4.21	4.31	4.40	4.50	4.61	4.74
	Q	110℃	9.20	10.73	12.06	13.35	14.77	16.47	18.61
	P		3.83	3.93	4.03	4.12	4.23	4.34	4.48
	Q	105℃	9.53	11.12	12.51	13.84	15.29	17.01	19.17
	P		3.58	3.68	3.77	3.87	3.98	4.10	4.25
	Q	100℃	9.84	11.48	12.91	14.28	15.75	17.49	19.66
	P		3.35	3.44	3.54	3.64	3.76	3.89	4.05
	Q	95℃	10.10	11.79	13.26	14.66	16.15	17.90	
	P		3.14	3.23	3.33	3.44	3.56	3.71	
	Q	90℃	10.32	12.05	13.55	14.97	16.47		
	P		2.94	3.04	3.14	3.25	3.39		
	Q	85℃	10.49	12.25	13.77	15.20	16.71		
	P		2.76	2.86	2.96	3.09	3.24		
	Q	80℃	10.59	12.38	13.91	15.35			
	P		2.59	2.69	2.81	2.94			
	Q	75℃	10.62	12.42	13.97	15.41			
	P		2.43	2.54	2.66	2.81			

制热量基于吸气过热5.0K，过冷5.0K。*Heating Capacity Based on SH 5.0K, SC 5.0K.*

制热量
Heating Capacity

R1233zd

型号Model	项目Item (kW)	Tc\Te	40℃	45℃	50℃	55℃	60℃	65℃	70℃
WH240KB-TFD-GN1	Q	155℃				10.56	11.61	13.15	15.37
	P					10.24	10.42	10.57	10.72
	Q	150℃				11.30	12.48	14.12	16.44
	P					9.51	9.67	9.82	9.95
	Q	145℃			11.02	12.07	13.37	15.11	17.53
	P				8.66	8.83	8.98	9.12	9.25
	Q	140℃			11.69	12.86	14.27	16.11	18.61
	P				8.04	8.20	8.34	8.47	8.61
	Q	135℃		11.11	12.39	13.67	15.17	17.10	19.67
	P			7.31	7.47	7.62	7.76	7.89	8.02
	Q	130℃		11.71	13.09	14.47	16.06	18.07	20.70
	P			6.80	6.95	7.09	7.22	7.35	7.49
	Q	125℃		12.30	13.79	15.27	16.93	19.01	21.70
	P			6.33	6.47	6.60	6.73	6.87	7.01
	Q	120℃	11.08	12.90	14.48	16.04	17.77	19.91	22.64
	P		5.75	5.90	6.03	6.16	6.29	6.43	6.58
	Q	115℃	11.56	13.48	15.15	16.77	18.57	20.75	23.53
	P		5.37	5.50	5.63	5.76	5.89	6.03	6.20
	Q	110℃	12.03	14.03	15.77	17.47	19.32	21.54	24.35
	P		5.01	5.14	5.26	5.39	5.53	5.68	5.86
	Q	105℃	12.47	14.55	16.36	18.10	20.00	22.25	25.08
	P		4.69	4.81	4.93	5.06	5.20	5.37	5.56
	Q	100℃	12.86	15.02	16.88	18.68	20.60	22.88	25.72
	P		4.38	4.50	4.63	4.76	4.92	5.09	5.30
	Q	95℃	13.21	15.42	17.34	19.17	21.12	23.41	
	P		4.11	4.23	4.35	4.50	4.66	4.85	
	Q	90℃	13.50	15.76	17.72	19.57	21.54		
	P		3.85	3.97	4.10	4.26	4.43		
	Q	85℃	13.72	16.02	18.01	19.88	21.86		
	P		3.61	3.74	3.88	4.04	4.23		
	Q	80℃	13.85	16.19	18.19	20.08			
	P		3.39	3.52	3.67	3.85			
	Q	75℃	13.89	16.25	18.27	20.15			
	P		3.18	3.32	3.48	3.68			
WH280KB-TFD-GN1	Q	155℃				12.13	13.34	15.10	17.65
	P					11.77	11.97	12.15	12.31
	Q	150℃				12.98	14.33	16.22	18.89
	P					10.92	11.11	11.28	11.43
	Q	145℃			12.65	13.87	15.35	17.36	20.13
	P				9.94	10.14	10.31	10.47	10.63
	Q	140℃			13.43	14.78	16.39	18.51	21.37
	P				9.24	9.42	9.58	9.73	9.89
	Q	135℃		12.77	14.23	15.70	17.42	19.64	22.59
	P			8.40	8.59	8.75	8.91	9.06	9.21
	Q	130℃		13.45	15.04	16.62	18.45	20.75	23.78
	P			7.81	7.99	8.14	8.29	8.44	8.60
	Q	125℃		14.13	15.84	17.54	19.45	21.83	24.92
	P			7.27	7.43	7.59	7.73	7.89	8.05
	Q	120℃	12.73	14.82	16.63	18.42	20.42	22.87	26.01
	P		6.61	6.78	6.93	7.08	7.22	7.38	7.56
	Q	115℃	13.28	15.48	17.40	19.27	21.33	23.84	27.03
	P		6.17	6.32	6.47	6.61	6.76	6.93	7.12
	Q	110℃	13.82	16.12	18.12	20.06	22.19	24.74	27.97
	P		5.76	5.90	6.05	6.19	6.35	6.53	6.73
	Q	105℃	14.32	16.71	18.79	20.80	22.97	25.56	28.81
	P		5.38	5.52	5.66	5.81	5.98	6.17	6.39
	Q	100℃	14.78	17.25	19.39	21.45	23.67	26.28	29.54
	P		5.04	5.17	5.32	5.47	5.65	5.85	6.09
	Q	95℃	15.18	17.72	19.92	22.02	24.26	26.89	
	P		4.72	4.85	5.00	5.16	5.35	5.57	
	Q	90℃	15.51	18.11	20.35	22.49	24.75		
	P		4.42	4.56	4.71	4.89	5.09		
	Q	85℃	15.76	18.40	20.68	22.84	25.11		
	P		4.15	4.29	4.45	4.64	4.86		
	Q	80℃	15.91	18.59	20.90	23.06			
	P		3.90	4.04	4.22	4.42			
	Q	75℃	15.95	18.66	20.98	23.15			
	P		3.66	3.81	4.00	4.22			

制热量基于吸气过热5.0K，过冷5.0K。*Heating Capacity Based on SH 5.0K, SC 5.0K.*

R1233zd

制热量
Heating Capacity

型号Model	项目Item (kW)	Tc\Te	40℃	45℃	50℃	55℃	60℃	65℃	70℃
WH360KB-TFD-GN1	Q	155℃				15.82	17.40	19.70	23.03
	P					15.35	15.61	15.84	16.06
	Q	150℃				16.93	18.70	21.16	24.64
	P					14.25	14.49	14.71	14.91
	Q	145℃			16.51	18.09	20.03	22.65	26.26
	P				12.97	13.23	13.45	13.66	13.86
	Q	140℃			17.52	19.28	21.38	24.14	27.88
	P				12.05	12.29	12.50	12.70	12.90
	Q	135℃		16.65	18.56	20.48	22.73	25.62	29.47
	P			10.95	11.20	11.42	11.62	11.82	12.02
	Q	130℃		17.54	19.62	21.69	24.07	27.07	31.02
	P			10.19	10.42	10.62	10.82	11.02	11.22
	Q	125℃		18.44	20.67	22.88	25.37	28.48	32.51
	P			9.49	9.70	9.90	10.09	10.29	10.50
	Q	120℃	16.60	19.33	21.70	24.03	26.63	29.83	33.93
	P		8.62	8.84	9.04	9.23	9.42	9.63	9.86
	Q	115℃	17.32	20.20	22.70	25.13	27.83	31.10	35.26
	P		8.04	8.25	8.44	8.63	8.82	9.04	9.29
	Q	110℃	18.02	21.03	23.64	26.17	28.95	32.28	36.48
	P		7.51	7.70	7.89	8.08	8.28	8.51	8.78
	Q	105℃	18.68	21.80	24.51	27.13	29.97	33.35	37.58
	P		7.02	7.21	7.39	7.58	7.80	8.04	8.33
	Q	100℃	19.28	22.50	25.30	27.98	30.88	34.29	38.53
	P		6.57	6.75	6.94	7.14	7.37	7.63	7.94
	Q	95℃	19.80	23.11	25.98	28.72	31.65	35.08	
	P		6.16	6.33	6.52	6.74	6.98	7.27	
	Q	90℃	20.23	23.62	26.55	29.33	32.28		
	P		5.77	5.95	6.15	6.38	6.64		
	Q	85℃	20.55	24.01	26.98	29.79	32.75		
	P		5.41	5.60	5.81	6.05	6.34		
	Q	80℃	20.75	24.25	27.26	30.08			
	P		5.08	5.28	5.50	5.77			
	Q	75℃	20.81	24.35	27.37	30.20			
	P		4.77	4.98	5.22	5.51			
WH470KB-TWD-GN1	Q	155℃				20.66	22.73	25.72	30.07
	P					20.04	20.39	20.69	20.97
	Q	150℃				22.11	24.42	27.63	32.17
	P					18.60	18.92	19.21	19.47
	Q	145℃			21.56	23.62	26.15	29.57	34.29
	P				16.94	17.27	17.57	17.84	18.10
	Q	140℃			22.88	25.17	27.91	31.52	36.40
	P				15.73	16.04	16.32	16.58	16.84
	Q	135℃		21.74	24.24	26.74	29.68	33.45	38.48
	P			14.30	14.62	14.91	15.18	15.43	15.70
	Q	130℃		22.90	25.61	28.32	31.43	35.35	40.51
	P			13.30	13.60	13.87	14.13	14.38	14.66
	Q	125℃		24.07	26.99	29.87	33.13	37.19	42.46
	P			12.39	12.66	12.92	13.17	13.43	13.72
	Q	120℃	21.68	25.24	28.33	31.38	34.78	38.95	44.31
	P		11.26	11.54	11.80	12.05	12.31	12.58	12.87
	Q	115℃	22.62	26.37	29.63	32.82	36.34	40.61	46.04
	P		10.50	10.77	11.02	11.26	11.52	11.80	12.12
	Q	110℃	23.53	27.46	30.87	34.18	37.80	42.15	47.64
	P		9.81	10.06	10.30	10.55	10.82	11.11	11.46
	Q	105℃	24.39	28.47	32.01	35.42	39.13	43.54	49.07
	P		9.17	9.41	9.65	9.90	10.18	10.50	10.88
	Q	100℃	25.17	29.38	33.03	36.54	40.32	44.77	50.32
	P		8.58	8.81	9.06	9.32	9.62	9.96	10.37
	Q	95℃	25.85	30.18	33.93	37.51	41.33	45.81	
	P		8.04	8.27	8.52	8.80	9.12	9.49	
	Q	90℃	26.42	30.84	34.67	38.30	42.16		
	P		7.54	7.77	8.03	8.33	8.67		
	Q	85℃	26.84	31.35	35.23	38.90	42.77		
	P		7.07	7.31	7.59	7.91	8.28		
	Q	80℃	27.09	31.67	35.59	39.28			
	P		6.64	6.89	7.18	7.53			
	Q	75℃	27.17	31.79	35.74	39.43			
	P		6.23	6.50	6.81	7.19			

制热量基于吸气过热5.0K，过冷5.0K。*Heating Capacity Based on SH 5.0K, SC 5.0K.*

制热量
Heating Capacity

R1233zd

型号Model	项目Item (kW)	Tc\Te	40℃	45℃	50℃	55℃	60℃	65℃	70℃
WH600KB-TWD-GN1	Q	155℃				25.43	27.97	31.66	37.00
	P					24.67	25.09	25.46	25.80
	Q	150℃				27.21	30.05	34.01	39.60
	P					22.90	23.29	23.64	23.97
	Q	145℃			26.53	29.07	32.19	36.40	42.21
	P				20.85	21.26	21.62	21.95	22.28
	Q	140℃			28.16	30.98	34.36	38.80	44.81
	P				19.37	19.74	20.09	20.41	20.73
	Q	135℃		26.76	29.83	32.92	36.53	41.17	47.36
	P			17.60	18.00	18.35	18.68	18.99	19.32
	Q	130℃		28.19	31.53	34.85	38.68	43.51	49.85
	P			16.38	16.74	17.07	17.39	17.70	18.04
	Q	125℃		29.63	33.22	36.76	40.78	45.77	52.25
	P			15.24	15.59	15.90	16.21	16.53	16.88
	Q	120℃	26.68	31.06	34.87	38.62	42.80	47.94	54.53
	P		13.85	14.21	14.53	14.83	15.15	15.48	15.85
	Q	115℃	27.84	32.46	36.47	40.39	44.73	49.98	56.67
	P		12.93	13.25	13.56	13.86	14.18	14.53	14.92
	Q	110℃	28.96	33.79	37.99	42.06	46.52	51.87	58.63
	P		12.07	12.38	12.68	12.98	13.31	13.68	14.10
	Q	105℃	30.02	35.03	39.39	43.60	48.16	53.59	60.39
	P		11.28	11.58	11.88	12.19	12.53	12.93	13.39
	Q	100℃	30.98	36.16	40.66	44.97	49.62	55.10	61.93
	P		10.56	10.85	11.15	11.47	11.84	12.26	12.77
	Q	95℃	31.82	37.15	41.76	46.16	50.87	56.38	
	P		9.89	10.18	10.48	10.82	11.22	11.68	
	Q	90℃	32.51	37.96	42.67	47.14	51.88		
	P		9.27	9.56	9.88	10.25	10.67		
	Q	85℃	33.03	38.58	43.36	47.88	52.64		
	P		8.70	9.00	9.34	9.73	10.20		
	Q	80℃	33.35	38.98	43.81	48.35			
	P		8.17	8.48	8.84	9.27			
	Q	75℃	33.44	39.13	43.99	48.53			
	P		7.67	8.00	8.39	8.85			

制热量基于吸气过热5.0K，过冷5.0K。*Heating Capacity Based on SH 5.0K, SC 5.0K.*

EVI-R1233zd

制热量
Heating Capacity

型号Model	项目Item (kW)	Tc\Te	40℃	45℃	50℃	55℃	60℃	65℃	70℃
WH70KB-TFD-GV1	Q	155℃				4.85	5.08	5.40	5.87
	P					3.12	3.17	3.22	3.26
	Q	150℃				4.90	5.16	5.50	6.01
	P					2.90	2.95	2.99	3.03
	Q	145℃			4.68	4.96	5.25	5.62	6.16
	P				2.64	2.69	2.73	2.78	2.82
	Q	140℃			4.74	5.04	5.35	5.75	6.33
	P				2.45	2.50	2.54	2.58	2.62
	Q	135℃		4.41	4.80	5.13	5.46	5.89	6.50
	P			2.23	2.28	2.32	2.36	2.40	2.44
	Q	130℃		4.47	4.88	5.22	5.58	6.04	6.68
	P			2.07	2.12	2.16	2.20	2.24	2.28
	Q	125℃		4.54	4.97	5.33	5.71	6.20	6.86
	P			1.93	1.97	2.01	2.05	2.09	2.14
	Q	120℃	4.04	4.62	5.06	5.44	5.84	6.35	7.05
	P		1.75	1.80	1.84	1.88	1.92	1.96	2.00
	Q	115℃	4.11	4.70	5.15	5.55	5.97	6.51	7.23
	P		1.64	1.68	1.72	1.75	1.79	1.84	1.89
	Q	110℃	4.18	4.78	5.24	5.66	6.10	6.66	7.41
	P		1.53	1.57	1.60	1.64	1.68	1.73	1.78
	Q	105℃	4.25	4.86	5.33	5.76	6.23	6.81	7.59
	P		1.43	1.46	1.50	1.54	1.59	1.64	1.69
	Q	100℃	4.32	4.93	5.42	5.86	6.34	6.95	7.75
	P		1.34	1.37	1.41	1.45	1.50	1.55	1.62
	Q	95℃	4.38	5.00	5.49	5.95	6.45	7.07	
	P		1.25	1.29	1.33	1.37	1.42	1.48	
	Q	90℃	4.43	5.05	5.56	6.03	6.54		
	P		1.17	1.21	1.25	1.30	1.35		
	Q	85℃	4.47	5.10	5.61	6.09	6.62		
	P		1.10	1.14	1.18	1.23	1.29		
	Q	80℃	4.49	5.13	5.64	6.14			
	P		1.03	1.07	1.12	1.17			
	Q	75℃	4.50	5.14	5.66	6.16			
	P		0.97	1.01	1.06	1.12			
WH120KB-TFD-GV1	Q	155℃				8.11	8.49	9.01	9.80
	P					5.21	5.30	5.38	5.45
	Q	150℃				8.18	8.61	9.18	10.03
	P					4.84	4.92	4.99	5.06
	Q	145℃			7.82	8.28	8.76	9.38	10.29
	P				4.40	4.49	4.57	4.64	4.71
	Q	140℃			7.91	8.41	8.93	9.60	10.57
	P				4.09	4.17	4.24	4.31	4.38
	Q	135℃		7.37	8.02	8.56	9.12	9.84	10.86
	P			3.72	3.80	3.88	3.95	4.01	4.08
	Q	130℃		7.47	8.15	8.73	9.32	10.09	11.16
	P			3.46	3.54	3.61	3.67	3.74	3.81
	Q	125℃		7.59	8.30	8.90	9.54	10.35	11.46
	P			3.22	3.29	3.36	3.43	3.49	3.57
	Q	120℃	6.75	7.72	8.45	9.08	9.76	10.61	11.77
	P		2.93	3.00	3.07	3.13	3.20	3.27	3.35
	Q	115℃	6.87	7.85	8.60	9.27	9.98	10.87	12.08
	P		2.73	2.80	2.86	2.93	3.00	3.07	3.15
	Q	110℃	6.99	7.98	8.76	9.45	10.19	11.12	12.38
	P		2.55	2.62	2.68	2.74	2.81	2.89	2.98
	Q	105℃	7.10	8.11	8.91	9.62	10.40	11.37	12.67
	P		2.38	2.45	2.51	2.57	2.65	2.73	2.83
	Q	100℃	7.21	8.24	9.05	9.79	10.59	11.60	12.94
	P		2.23	2.29	2.35	2.42	2.50	2.59	2.70
	Q	95℃	7.31	8.35	9.17	9.94	10.77	11.81	
	P		2.09	2.15	2.21	2.29	2.37	2.47	
	Q	90℃	7.40	8.44	9.28	10.07	10.93		
	P		1.96	2.02	2.09	2.16	2.25		
	Q	85℃	7.46	8.51	9.37	10.17	11.06		
	P		1.84	1.90	1.97	2.06	2.15		
	Q	80℃	7.51	8.56	9.43	10.25			
	P		1.73	1.79	1.87	1.96			
	Q	75℃	7.52	8.58	9.45	10.29			
	P		1.62	1.69	1.77	1.87			

制热量基于吸气过热5.0K，过冷5.0K。*Heating Capacity Based on SH 5.0K, SC 5.0K.*

制热量
Heating Capacity

R1233zd-EVI

型号Model	项目Item (kW)	Tc\Te	40℃	45℃	50℃	55℃	60℃	65℃	70℃
WH160KB-TFD-GV1	Q	155℃				10.36	10.85	11.52	12.53
	P					6.66	6.77	6.87	6.97
	Q	150℃				10.46	11.01	11.74	12.83
	P					6.18	6.29	6.38	6.47
	Q	145℃			9.99	10.59	11.20	11.99	13.15
	P				5.63	5.74	5.84	5.93	6.01
	Q	140℃			10.11	10.75	11.42	12.27	13.50
	P				5.23	5.33	5.42	5.51	5.60
	Q	135℃		9.42	10.25	10.94	11.66	12.58	13.87
	P			4.75	4.86	4.95	5.04	5.13	5.22
	Q	130℃		9.55	10.42	11.15	11.92	12.90	14.26
	P			4.42	4.52	4.61	4.70	4.78	4.87
	Q	125℃		9.70	10.60	11.38	12.19	13.22	14.65
	P			4.12	4.21	4.29	4.38	4.46	4.56
	Q	120℃	8.63	9.86	10.80	11.61	12.47	13.56	15.05
	P		3.74	3.84	3.92	4.01	4.09	4.18	4.28
	Q	115℃	8.78	10.03	11.00	11.84	12.75	13.89	15.44
	P		3.49	3.58	3.66	3.74	3.83	3.92	4.03
	Q	110℃	8.93	10.20	11.19	12.08	13.02	14.22	15.82
	P		3.26	3.34	3.42	3.51	3.59	3.69	3.81
	Q	105℃	9.08	10.37	11.39	12.30	13.29	14.53	16.19
	P		3.05	3.13	3.21	3.29	3.38	3.49	3.62
	Q	100℃	9.22	10.53	11.56	12.51	13.54	14.82	16.54
	P		2.85	2.93	3.01	3.10	3.20	3.31	3.45
	Q	95℃	9.35	10.67	11.73	12.70	13.76	15.09	
	P		2.67	2.75	2.83	2.92	3.03	3.15	
	Q	90℃	9.46	10.79	11.86	12.86	13.96		
	P		2.50	2.58	2.67	2.77	2.88		
	Q	85℃	9.54	10.88	11.97	13.00	14.13		
	P		2.35	2.43	2.52	2.63	2.75		
	Q	80℃	9.59	10.94	12.05	13.10			
	P		2.20	2.29	2.39	2.50			
	Q	75℃	9.61	10.96	12.08	13.15			
	P		2.07	2.16	2.26	2.39			
WH190KB-TFD-GV1	Q	155℃				12.18	12.76	13.54	14.73
	P					7.83	7.96	8.08	8.19
	Q	150℃				12.29	12.94	13.80	15.08
	P					7.27	7.39	7.50	7.61
	Q	145℃			11.75	12.45	13.17	14.10	15.47
	P				6.62	6.75	6.86	6.97	7.07
	Q	140℃			11.89	12.64	13.42	14.43	15.88
	P				6.15	6.27	6.38	6.48	6.58
	Q	135℃		11.07	12.06	12.87	13.71	14.79	16.32
	P			5.59	5.71	5.83	5.93	6.03	6.13
	Q	130℃		11.23	12.25	13.11	14.01	15.16	16.77
	P			5.20	5.32	5.42	5.52	5.62	5.73
	Q	125℃		11.41	12.47	13.38	14.34	15.55	17.23
	P			4.84	4.95	5.05	5.15	5.25	5.36
	Q	120℃	10.14	11.60	12.70	13.65	14.66	15.94	17.70
	P		4.40	4.51	4.61	4.71	4.81	4.91	5.03
	Q	115℃	10.32	11.80	12.93	13.93	14.99	16.33	18.16
	P		4.10	4.21	4.31	4.40	4.50	4.61	4.74
	Q	110℃	10.50	12.00	13.16	14.20	15.32	16.72	18.61
	P		3.83	3.93	4.03	4.12	4.23	4.34	4.48
	Q	105℃	10.68	12.19	13.39	14.46	15.63	17.08	19.04
	P		3.58	3.68	3.77	3.87	3.98	4.10	4.25
	Q	100℃	10.84	12.38	13.60	14.71	15.92	17.43	19.45
	P		3.35	3.44	3.54	3.64	3.76	3.89	4.05
	Q	95℃	10.99	12.54	13.79	14.93	16.19	17.75	
	P		3.14	3.23	3.33	3.44	3.56	3.71	
	Q	90℃	11.12	12.68	13.95	15.13	16.42		
	P		2.94	3.04	3.14	3.25	3.39		
	Q	85℃	11.22	12.79	14.08	15.29	16.62		
	P		2.76	2.86	2.96	3.09	3.24		
	Q	80℃	11.28	12.86	14.17	15.40			
	P		2.59	2.69	2.81	2.94			
	Q	75℃	11.30	12.89	14.21	15.46			
	P		2.43	2.54	2.66	2.81			

制热量基于吸气过热5.0K，过冷5.0K。*Heating Capacity Based on SH 5.0K, SC 5.0K.*

EVI-R1233zd

制热量
Heating Capacity

型号Model	项目Item (kW)	Tc\Te	40℃	45℃	50℃	55℃	60℃	65℃	70℃
WH240KB-TFD-GV1	Q	155℃				15.93	16.69	17.71	19.27
	P					10.24	10.42	10.57	10.71
	Q	150℃				16.08	16.93	18.05	19.73
	P					9.51	9.67	9.81	9.95
	Q	145℃			15.37	16.28	17.22	18.45	20.23
	P				8.66	8.83	8.98	9.12	9.25
	Q	140℃			15.55	16.54	17.56	18.88	20.77
	P				8.04	8.20	8.34	8.47	8.61
	Q	135℃		14.48	15.77	16.83	17.93	19.34	21.34
	P			7.31	7.47	7.62	7.76	7.89	8.02
	Q	130℃		14.69	16.03	17.15	18.33	19.83	21.93
	P			6.80	6.95	7.09	7.22	7.35	7.49
	Q	125℃		14.92	16.31	17.49	18.75	20.34	22.53
	P			6.33	6.47	6.60	6.73	6.87	7.01
	Q	120℃	13.27	15.17	16.61	17.85	19.18	20.85	23.14
	P		5.75	5.90	6.03	6.16	6.29	6.43	6.58
	Q	115℃	13.50	15.43	16.91	18.21	19.61	21.36	23.75
	P		5.37	5.50	5.63	5.76	5.89	6.03	6.20
	Q	110℃	13.73	15.69	17.22	18.57	20.03	21.86	24.34
	P		5.01	5.14	5.26	5.39	5.53	5.68	5.86
	Q	105℃	13.96	15.95	17.51	18.92	20.44	22.34	24.91
	P		4.69	4.81	4.93	5.06	5.20	5.37	5.56
	Q	100℃	14.18	16.19	17.79	19.24	20.82	22.80	25.44
	P		4.38	4.50	4.63	4.76	4.92	5.09	5.30
	Q	95℃	14.38	16.41	18.03	19.53	21.17	23.22	
	P		4.11	4.23	4.35	4.49	4.66	4.85	
	Q	90℃	14.54	16.59	18.25	19.79	21.48		
	P		3.85	3.97	4.10	4.25	4.43		
	Q	85℃	14.67	16.73	18.41	19.99	21.73		
	P		3.61	3.74	3.88	4.04	4.23		
	Q	80℃	14.75	16.82	18.53	20.14			
	P		3.39	3.52	3.67	3.85			
	Q	75℃	14.78	16.86	18.58	20.22			
	P		3.18	3.32	3.48	3.68			
WH280KB-TFD-GV1	Q	155℃				18.30	19.17	20.35	22.14
	P					11.77	11.97	12.14	12.31
	Q	150℃				18.47	19.45	20.74	22.66
	P					10.92	11.11	11.27	11.43
	Q	145℃			17.65	18.71	19.78	21.19	23.23
	P				9.94	10.14	10.31	10.47	10.62
	Q	140℃			17.86	19.00	20.17	21.68	23.86
	P				9.24	9.42	9.58	9.73	9.89
	Q	135℃		16.64	18.11	19.33	20.60	22.22	24.51
	P			8.40	8.59	8.75	8.91	9.06	9.21
	Q	130℃		16.87	18.41	19.70	21.06	22.78	25.19
	P			7.81	7.99	8.14	8.29	8.45	8.60
	Q	125℃		17.13	18.73	20.10	21.54	23.36	25.89
	P			7.27	7.43	7.59	7.73	7.89	8.05
	Q	120℃	15.24	17.42	19.07	20.51	22.03	23.95	26.58
	P		6.61	6.78	6.93	7.08	7.23	7.38	7.56
	Q	115℃	15.50	17.72	19.43	20.92	22.52	24.54	27.28
	P		6.17	6.32	6.47	6.61	6.76	6.93	7.12
	Q	110℃	15.77	18.03	19.78	21.33	23.01	25.11	27.96
	P		5.76	5.90	6.05	6.19	6.35	6.53	6.73
	Q	105℃	16.04	18.32	20.11	21.73	23.48	25.67	28.61
	P		5.38	5.52	5.66	5.81	5.98	6.17	6.39
	Q	100℃	16.29	18.60	20.43	22.10	23.92	26.19	29.23
	P		5.04	5.17	5.32	5.47	5.65	5.85	6.09
	Q	95℃	16.51	18.85	20.72	22.44	24.32	26.67	
	P		4.72	4.85	5.00	5.16	5.35	5.57	
	Q	90℃	16.71	19.06	20.96	22.73	24.67		
	P		4.42	4.56	4.71	4.89	5.09		
	Q	85℃	16.85	19.22	21.15	22.96	24.96		
	P		4.15	4.29	4.45	4.64	4.86		
	Q	80℃	16.95	19.33	21.28	23.14			
	P		3.90	4.04	4.22	4.42			
	Q	75℃	16.98	19.36	21.34	23.23			
	P		3.66	3.81	4.00	4.22			

制热量基于吸气过热5.0K，过冷5.0K。*Heating Capacity Based on SH 5.0K, SC 5.0K.*

制热量
Heating Capacity

R1233zd-EVI

型号Model	项目Item (kW)	Tc\Te	40℃	45℃	50℃	55℃	60℃	65℃	70℃
WH360KB-TFD-GV1	Q	155℃				23.87	25.01	26.55	28.88
	P					15.35	15.61	15.84	16.05
	Q	150℃				24.10	25.37	27.05	29.56
	P					14.25	14.49	14.71	14.91
	Q	145℃			23.02	24.40	25.81	27.64	30.31
	P				12.97	13.23	13.45	13.66	13.86
	Q	140℃			23.30	24.78	26.31	28.29	31.12
	P				12.05	12.29	12.50	12.70	12.90
	Q	135℃		21.70	23.63	25.22	26.87	28.99	31.98
	P			10.95	11.20	11.42	11.62	11.82	12.02
	Q	130℃		22.01	24.01	25.70	27.47	29.72	32.86
	P			10.19	10.42	10.62	10.82	11.02	11.22
	Q	125℃		22.35	24.44	26.22	28.09	30.48	33.77
	P			9.49	9.70	9.90	10.09	10.29	10.51
	Q	120℃	19.88	22.73	24.88	26.75	28.74	31.25	34.68
	P		8.62	8.84	9.04	9.23	9.43	9.63	9.86
	Q	115℃	20.22	23.12	25.34	27.29	29.38	32.01	35.59
	P		8.04	8.25	8.44	8.63	8.82	9.04	9.29
	Q	110℃	20.58	23.51	25.80	27.83	30.02	32.76	36.47
	P		7.51	7.70	7.89	8.08	8.28	8.51	8.78
	Q	105℃	20.92	23.90	26.24	28.35	30.63	33.48	37.32
	P		7.02	7.21	7.39	7.58	7.80	8.04	8.33
	Q	100℃	21.25	24.26	26.65	28.83	31.20	34.16	38.13
	P		6.57	6.75	6.94	7.14	7.37	7.63	7.94
	Q	95℃	21.54	24.58	27.02	29.27	31.72	34.79	
	P		6.15	6.33	6.52	6.74	6.98	7.27	
	Q	90℃	21.79	24.86	27.34	29.65	32.18		
	P		5.77	5.95	6.15	6.38	6.64		
	Q	85℃	21.99	25.07	27.59	29.96	32.56		
	P		5.41	5.60	5.81	6.05	6.34		
	Q	80℃	22.11	25.21	27.77	30.18			
	P		5.08	5.28	5.50	5.77			
	Q	75℃	22.15	25.26	27.84	30.31			
	P		4.77	4.98	5.22	5.51			
WH470KB-TWD-GV1	Q	155℃				31.17	32.66	34.66	37.71
	P					20.04	20.38	20.68	20.96
	Q	150℃				31.46	33.13	35.33	38.59
	P					18.60	18.92	19.20	19.47
	Q	145℃			30.06	31.86	33.70	36.09	39.58
	P				16.94	17.27	17.57	17.84	18.10
	Q	140℃			30.42	32.36	34.35	36.94	40.63
	P				15.74	16.04	16.32	16.58	16.84
	Q	135℃		28.34	30.85	32.93	35.08	37.85	41.75
	P			14.30	14.62	14.91	15.18	15.43	15.70
	Q	130℃		28.73	31.36	33.56	35.87	38.81	42.91
	P			13.31	13.60	13.87	14.13	14.39	14.66
	Q	125℃		29.19	31.91	34.23	36.68	39.80	44.09
	P			12.39	12.66	12.92	13.17	13.43	13.72
	Q	120℃	25.96	29.68	32.49	34.93	37.52	40.80	45.28
	P		11.26	11.54	11.80	12.05	12.31	12.58	12.88
	Q	115℃	26.41	30.19	33.09	35.64	38.37	41.80	46.47
	P		10.50	10.77	11.02	11.26	11.52	11.80	12.12
	Q	110℃	26.87	30.70	33.68	36.34	39.19	42.78	47.62
	P		9.81	10.06	10.30	10.55	10.82	11.12	11.46
	Q	105℃	27.32	31.21	34.26	37.01	39.99	43.72	48.73
	P		9.17	9.41	9.65	9.90	10.18	10.50	10.88
	Q	100℃	27.75	31.68	34.80	37.64	40.74	44.61	49.78
	P		8.58	8.81	9.06	9.32	9.62	9.96	10.37
	Q	95℃	28.13	32.10	35.29	38.22	41.42	45.42	
	P		8.04	8.27	8.52	8.79	9.12	9.49	
	Q	90℃	28.46	32.46	35.70	38.71	42.02		
	P		7.53	7.77	8.03	8.33	8.67		
	Q	85℃	28.71	32.74	36.03	39.12	42.52		
	P		7.07	7.31	7.59	7.91	8.28		
	Q	80℃	28.87	32.92	36.26	39.41			
	P		6.64	6.89	7.18	7.53			
	Q	75℃	28.92	32.98	36.36	39.57			
	P		6.23	6.50	6.82	7.19			

制热量基于吸气过热5.0K，过冷5.0K。*Heating Capacity Based on SH 5.0K, SC 5.0K.*

EVI-R1233zd

制热量
Heating Capacity

型号Model	项目Item (kW)	Tc\Te	40℃	45℃	50℃	55℃	60℃	65℃	70℃
WH600KB-TWD-GV1	Q	155℃				38.37	40.20	42.66	46.41
	P					24.66	25.09	25.46	25.80
	Q	150℃				38.72	40.77	43.48	47.50
	P					22.89	23.28	23.63	23.96
	Q	145℃			37.00	39.22	41.47	44.42	48.71
	P				20.85	21.26	21.62	21.95	22.27
	Q	140℃			37.44	39.82	42.28	45.46	50.01
	P				19.37	19.74	20.09	20.41	20.73
	Q	135℃		34.87	37.97	40.53	43.18	46.58	51.39
	P			17.60	18.00	18.35	18.68	18.99	19.32
	Q	130℃		35.36	38.59	41.30	44.14	47.76	52.81
	P			16.38	16.74	17.07	17.39	17.70	18.04
	Q	125℃		35.92	39.27	42.13	45.15	48.98	54.27
	P			15.25	15.59	15.90	16.21	16.54	16.88
	Q	120℃	31.95	36.53	39.99	42.99	46.18	50.21	55.73
	P		13.85	14.21	14.53	14.84	15.15	15.48	15.85
	Q	115℃	32.50	37.15	40.72	43.86	47.22	51.44	57.19
	P		12.93	13.25	13.56	13.86	14.18	14.53	14.92
	Q	110℃	33.07	37.79	41.46	44.72	48.24	52.65	58.61
	P		12.07	12.38	12.68	12.98	13.31	13.68	14.11
	Q	105℃	33.62	38.41	42.17	45.55	49.22	53.81	59.98
	P		11.28	11.58	11.88	12.19	12.53	12.93	13.39
	Q	100℃	34.15	38.99	42.83	46.33	50.14	54.90	61.27
	P		10.56	10.85	11.15	11.47	11.84	12.26	12.77
	Q	95℃	34.62	39.51	43.43	47.04	50.98	55.91	
	P		9.89	10.18	10.48	10.82	11.22	11.68	
	Q	90℃	35.03	39.95	43.94	47.65	51.72		
	P		9.27	9.56	9.88	10.25	10.67		
	Q	85℃	35.34	40.29	44.35	48.14	52.33		
	P		8.70	9.00	9.34	9.73	10.20		
	Q	80℃	35.53	40.52	44.62	48.50			
	P		8.17	8.48	8.84	9.27			
	Q	75℃	35.59	40.59	44.75	48.70			
	P		7.67	8.00	8.39	8.85			

制热量基于吸气过热5.0K，过冷5.0K。*Heating Capacity Based on SH 5.0K, SC 5.0K.*

WH70

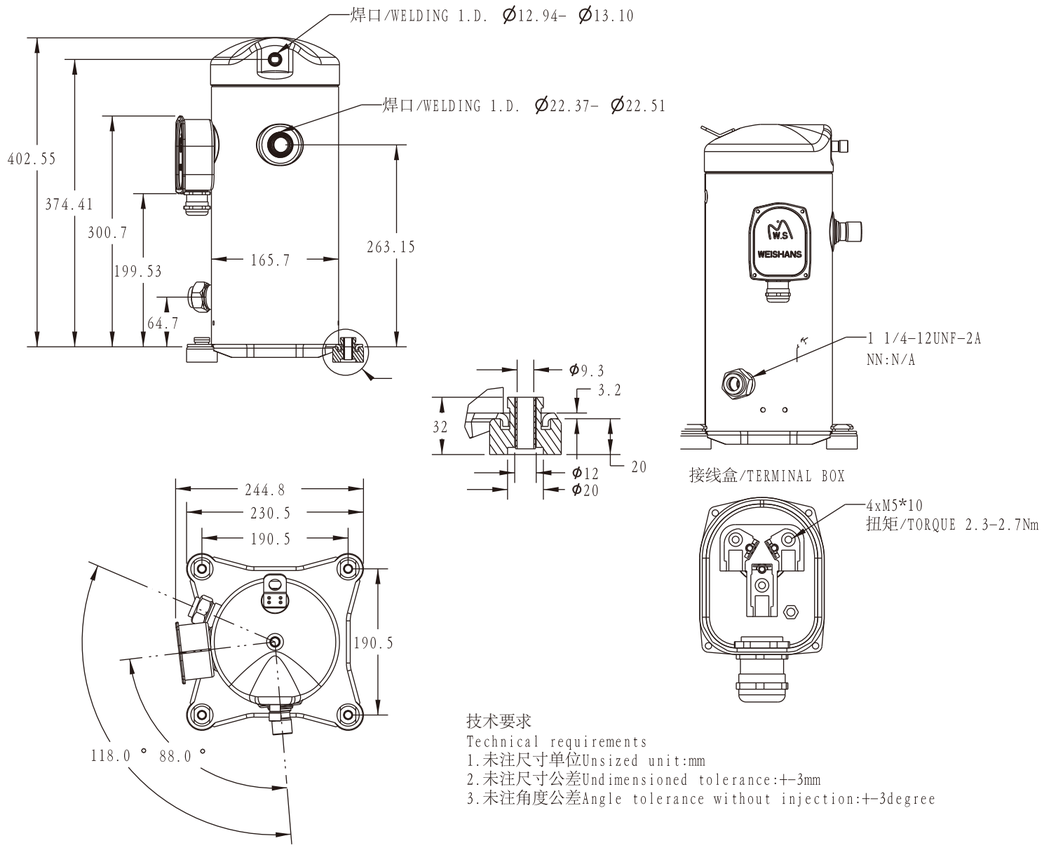

技术要求
Technical requirements
1.未注尺寸单位Unsized unit:mm
2.未注尺寸公差Undimensioned tolerance:+-3mm
3.未注角度公差Angle tolerance without injection:+-3degree

WH70-EVI

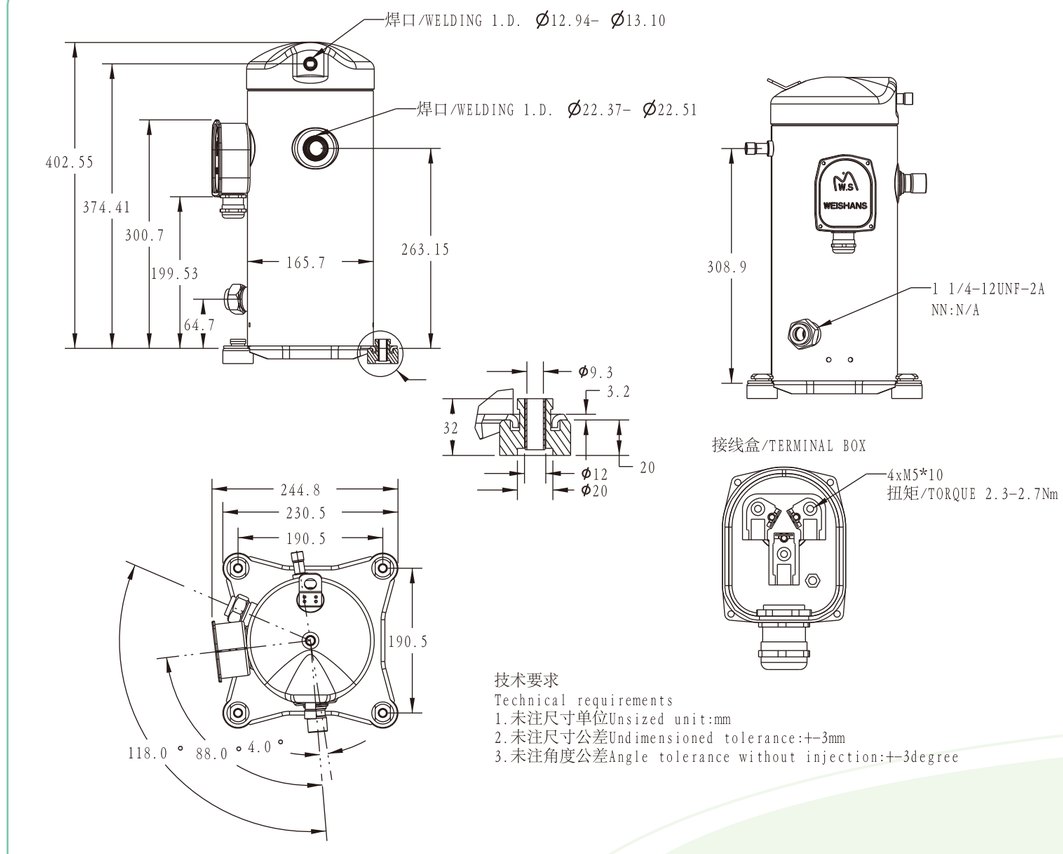

技术要求
Technical requirements
1.未注尺寸单位Unsized unit:mm
2.未注尺寸公差Undimensioned tolerance:+-3mm
3.未注角度公差Angle tolerance without injection:+-3degree

WH120-WH160

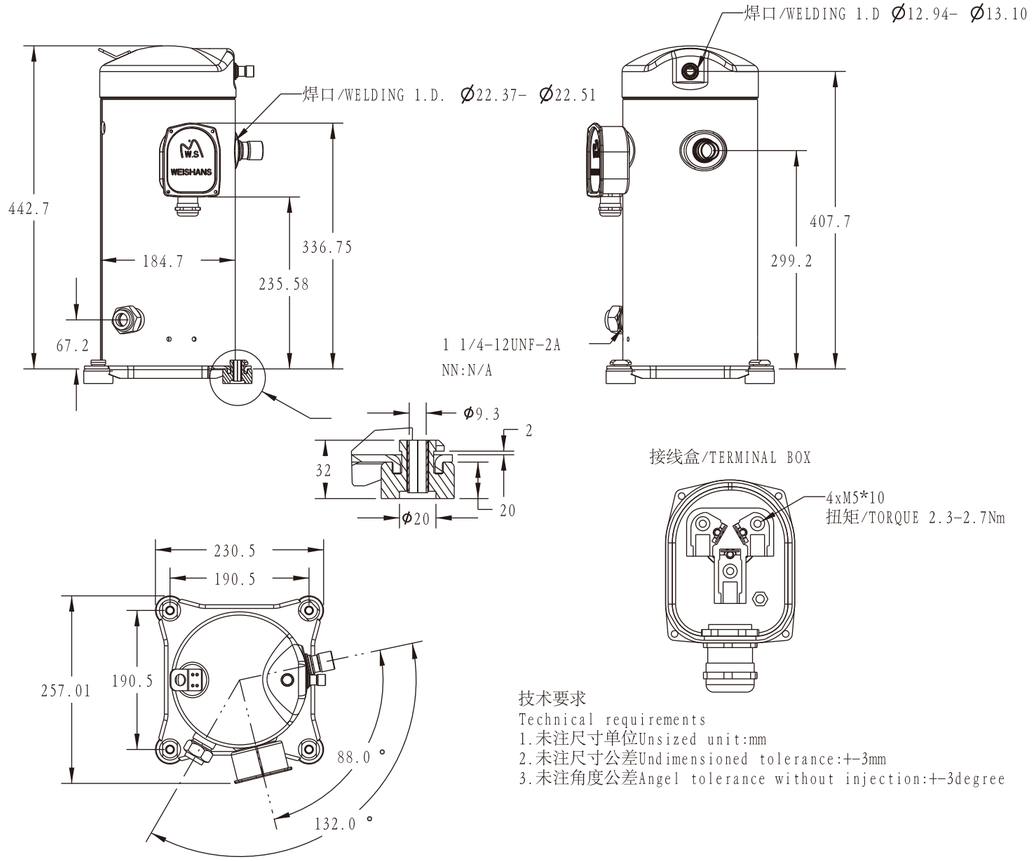

技术要求
Technical requirements
1.未注尺寸单位Unsized unit:mm
2.未注尺寸公差Undimensioned tolerance:+-3mm
3.未注角度公差Angel tolerance without injection:+-3degree

外形尺寸
Dimension

WH120-WH160-EVI

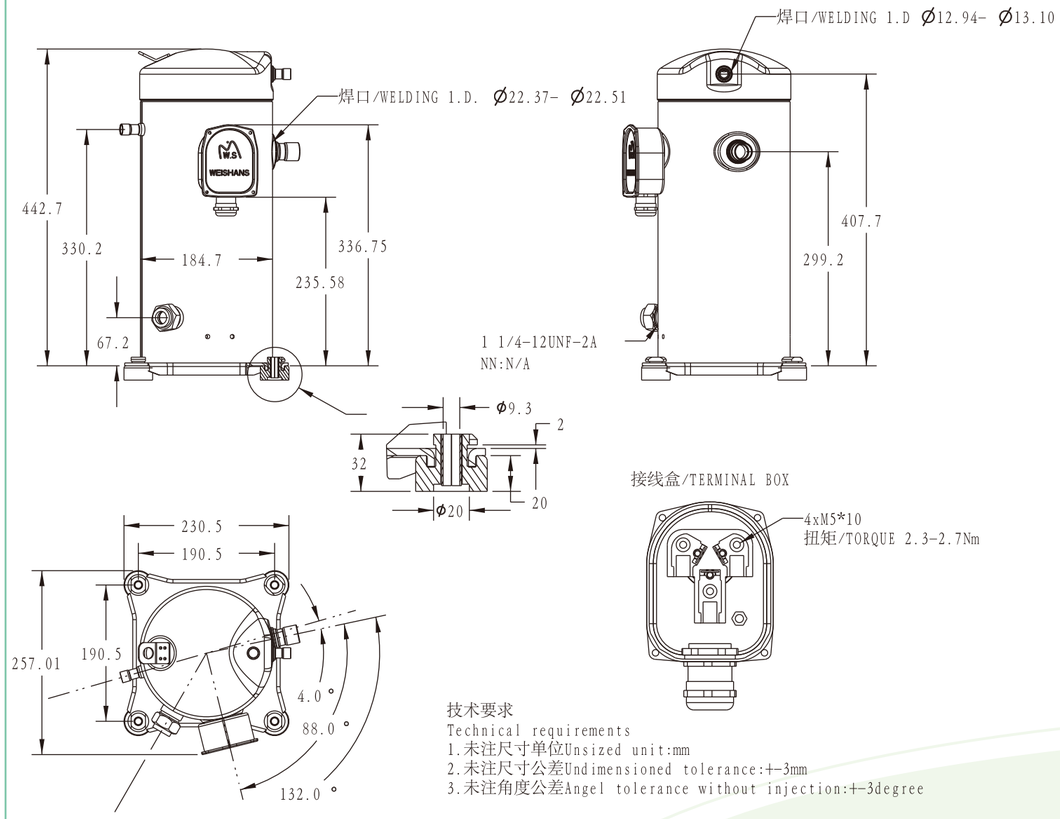

技术要求
Technical requirements
1.未注尺寸单位Unsized unit:mm
2.未注尺寸公差Undimensioned tolerance:+-3mm
3.未注角度公差Angel tolerance without injection:+-3degree

WH190-WH240

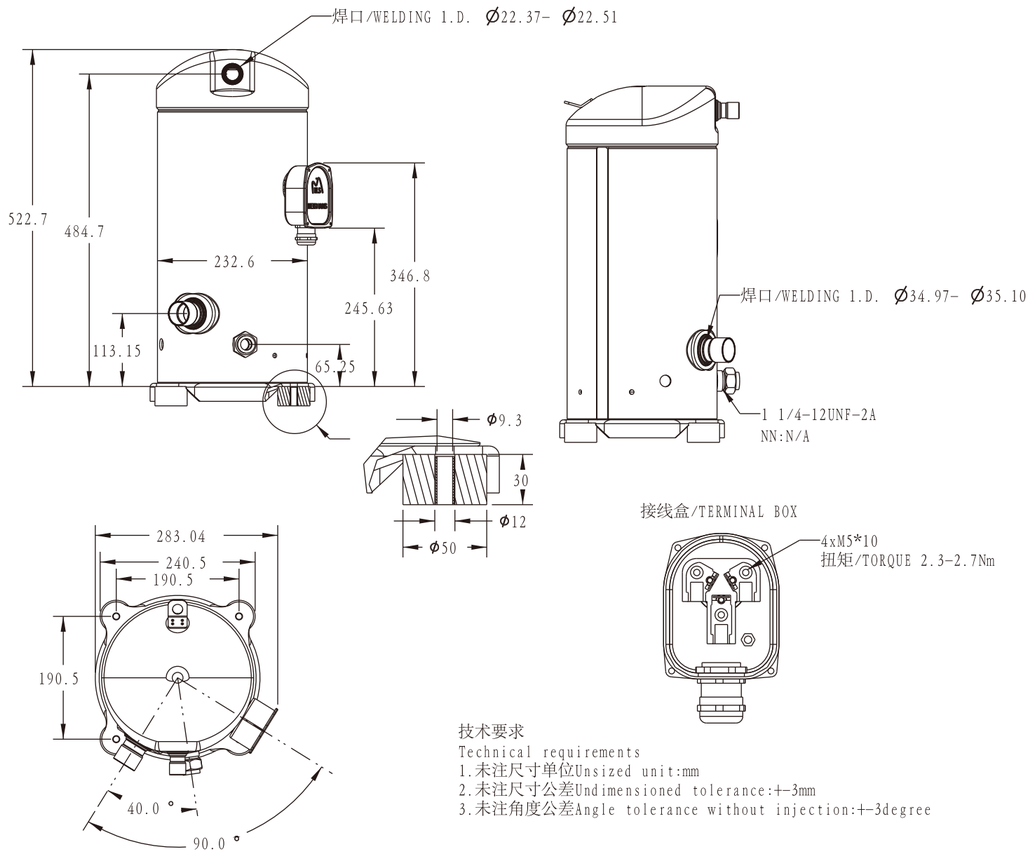

技术要求
Technical requirements
1.未注尺寸单位Unsized unit:mm
2.未注尺寸公差Undimensioned tolerance:+-3mm
3.未注角度公差Angle tolerance without injection:+-3degree

WH190-WH240-EVI

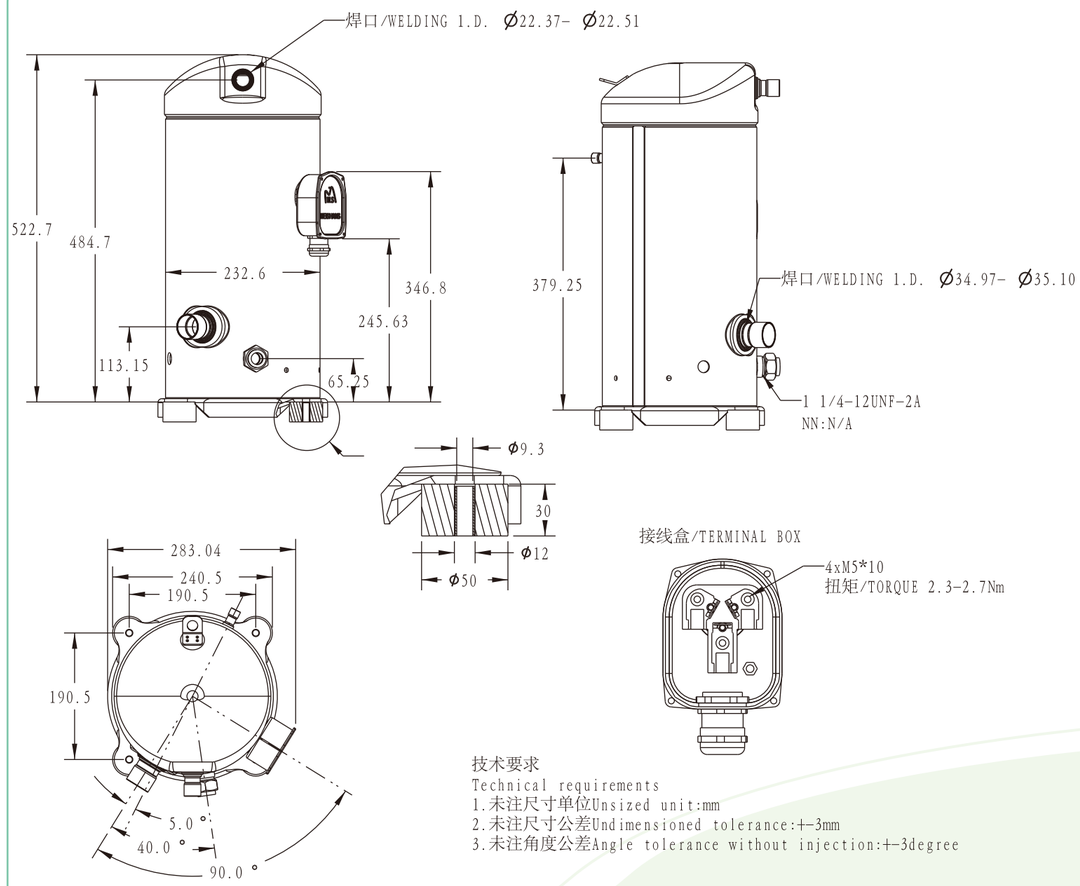

技术要求
Technical requirements
1.未注尺寸单位Unsized unit:mm
2.未注尺寸公差Undimensioned tolerance:+-3mm
3.未注角度公差Angle tolerance without injection:+-3degree

WH280-WH360

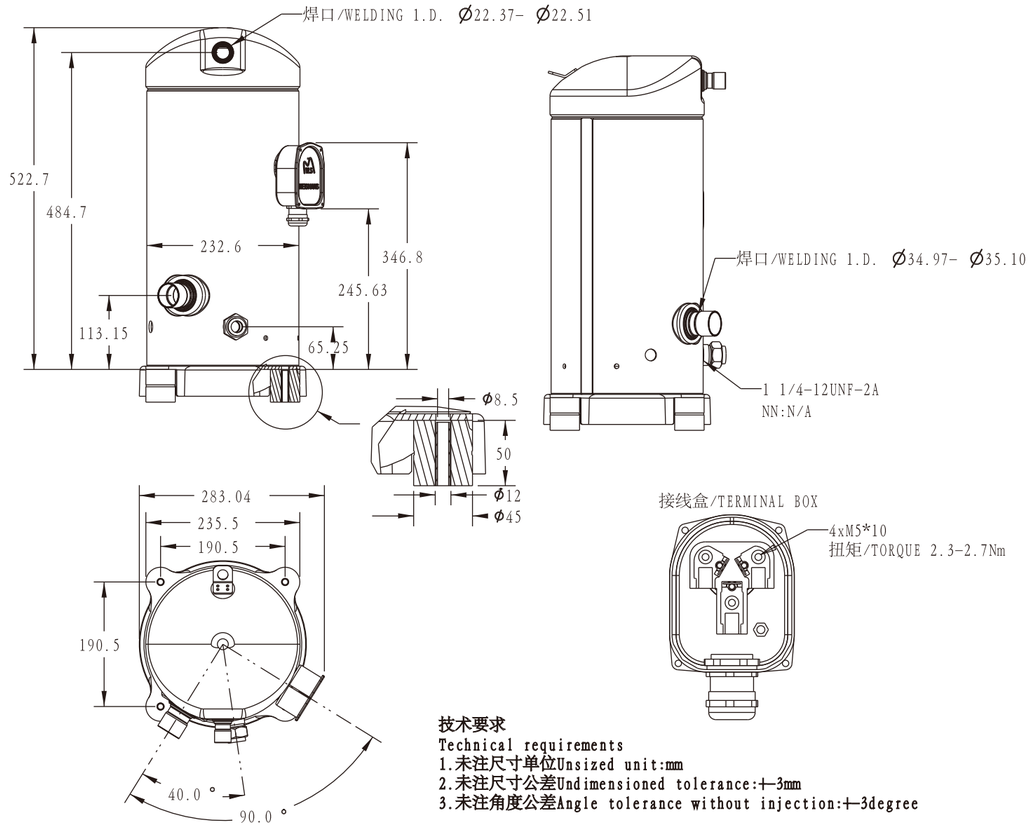

技术要求
Technical requirements
1.未注尺寸单位Unsized unit:mm
2.未注尺寸公差Undimensioned tolerance:+-3mm
3.未注角度公差Angle tolerance without injection:+-3degree

外形尺寸
Dimension

WH280-WH360-EVI

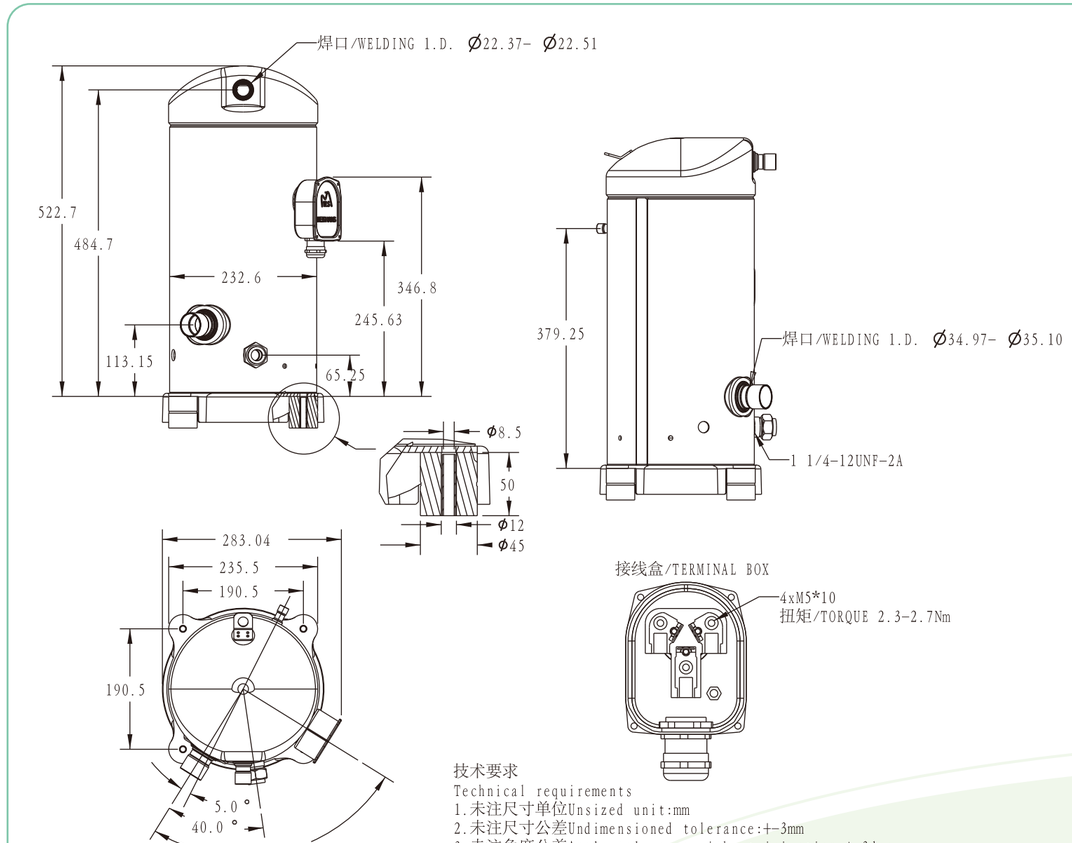

技术要求
Technical requirements
1.未注尺寸单位Unsized unit:mm
2.未注尺寸公差Undimensioned tolerance:+-3mm
3.未注角度公差Angle tolerance without injection:+-3degree

WH470-WH600

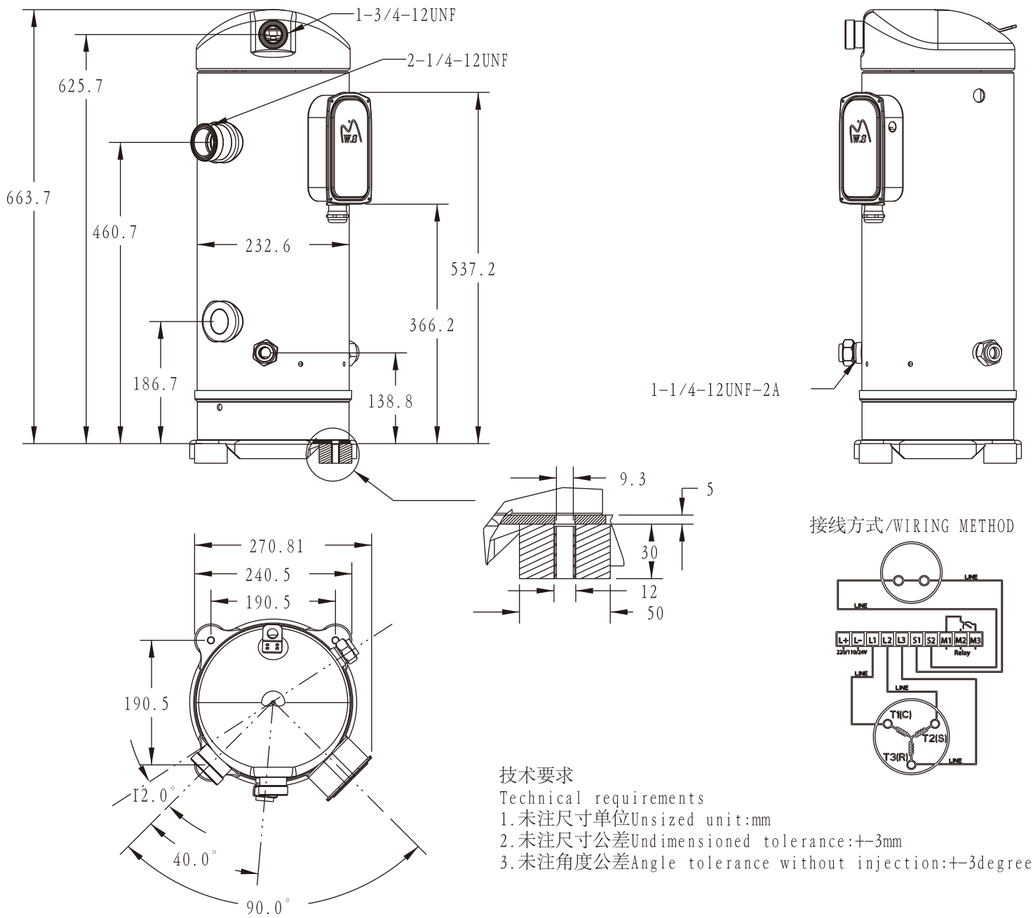

技术要求
Technical requirements
1.未注尺寸单位Unsized unit:mm
2.未注尺寸公差Undimensioned tolerance:+-3mm
3.未注角度公差Angle tolerance without injection:+-3degree

WH470-WH600-EVI

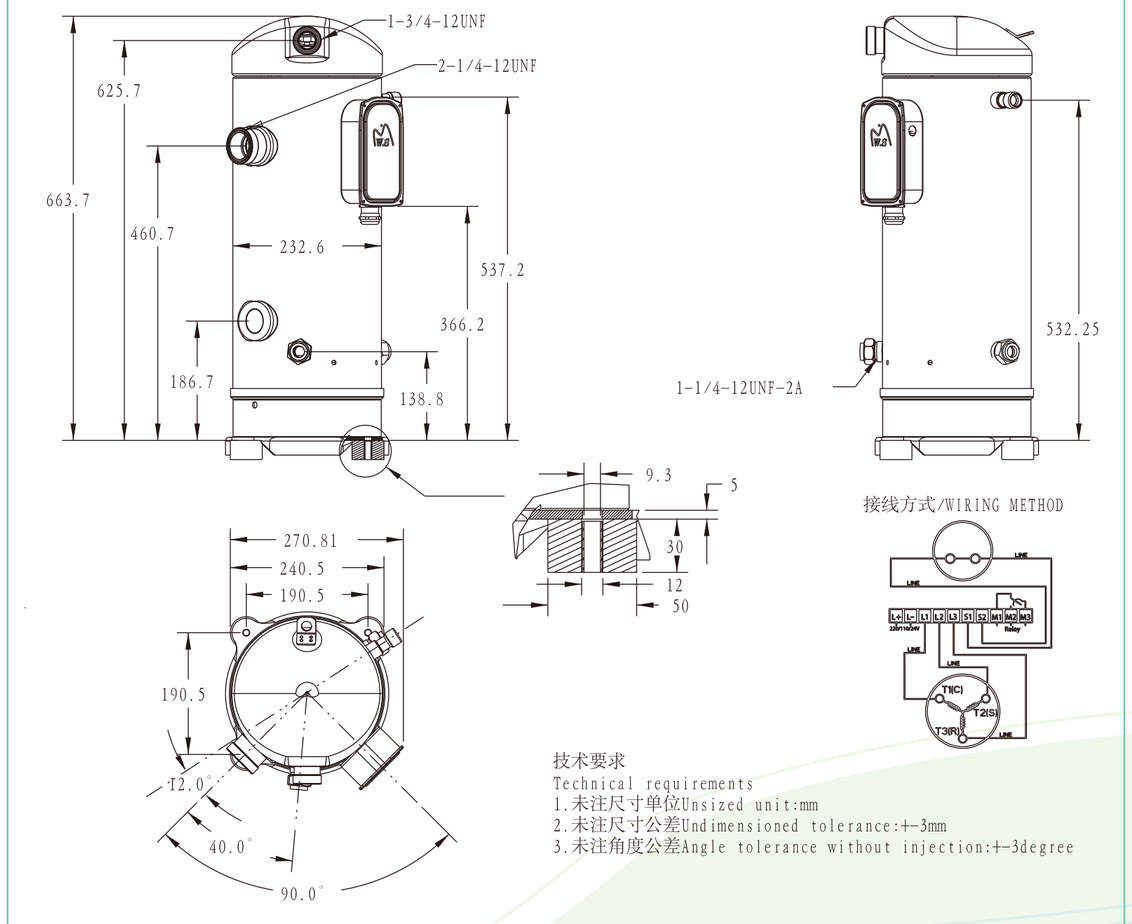

技术要求
Technical requirements
1.未注尺寸单位Unsized unit:mm
2.未注尺寸公差Undimensioned tolerance:+-3mm
3.未注角度公差Angle tolerance without injection:+-3degree

保护模块接线图

Protection module wiring diagram

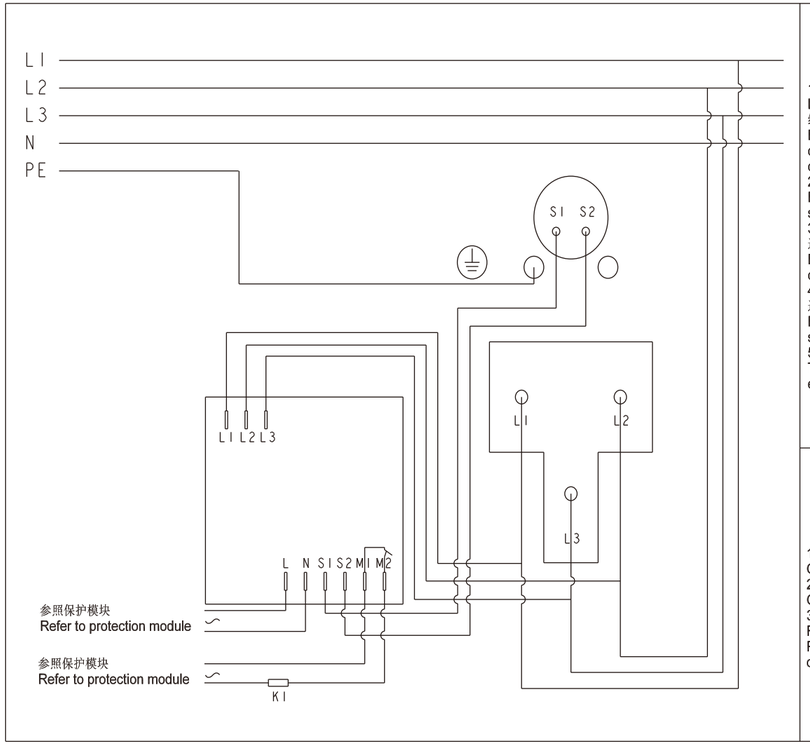

接线说明:
Wiring Instructions:

1.保护模块信号输入L1,L2,L3分别与压缩机的T型接头L1,L2,L3连接,压缩机的T型接头L1,L2,L3分别连接电源线的L1,L2,L3;
Protection module signal input L1,L2,L3 connect to compressor T connector L1,L2,L3,compressor T connector L1,L2,L3 connect to power line L1,L2,L3;
2.保护模块电源输入L,N连接指定的电源;
Protection module power input L,N connect to specified power supply;
3.保护模块信号输入S1,S2分别与压缩机的端子S1,S2连接;
Protection module signal input S1,S2 connect to compressor terminal S1,S2;
4.保护模块信号输出M1,M2与指定的电源,接触器K1连接;
Protection module signal output M1,M2 connect to specified power supply,contactor K1;
5.接地标志处的螺栓连接系统的PE端.
The bolt of grounding mark connect to system PE end.

保护模块闪现说明:
Protection Module Flashing Instructions:

1.绿灯亮起:设备操作;
Green light on:equipment operation;
2.绿灯闪烁:设备运转;
Green light flashing:equipment running;
3.红色/桔色闪烁:错误,设备中断;具体查看保护模块说明书.
Red/orange flashing:error,device interruption;
Please refer to the protection module manual for details.

备注

Remarks