联系我们 / Contact Us

苏州为山之环境技术有限公司

Suzhou Weishans Climate Technologies Co.,Ltd

公司官网 / Web:www.weishans.com

地址：江苏省苏州市相城区黄埭镇咏春科技园

Address：Yongchun Science and Technology Park, Huangdai Town, Xiangcheng District, Suzhou City, Jiangsu Province

联系人Contact：王先生Mr.Wang:13771888067，李先生Mr.Li:15995875226，陈女士Ms.chen:13640429967，王先生Mr.Wang:18896534978

免责声明

技术数据在印刷前已经校对过，印刷之后有再更新的可能。如有对某一参数确认的需求，请联系苏州为山之环境技术有限公司。为山之对参数中可能存在的差错概不承担任何责任，为山之保留自行改变其产品而不预先通知的权利。

Disclaimer

Our technical data have been checked before printing, but it is possible for data to be updated after printing. If you need to confirm a certain parameter, please contact Suzhou Weishans Climate Technology Co., Ltd. Weishans will not take any responsibilities for any possible errors in the parameters and reserve the right to change its products without prior notice.

Rev:202610

WEISHANS Climate Technologies 为山 · 涡旋压缩机

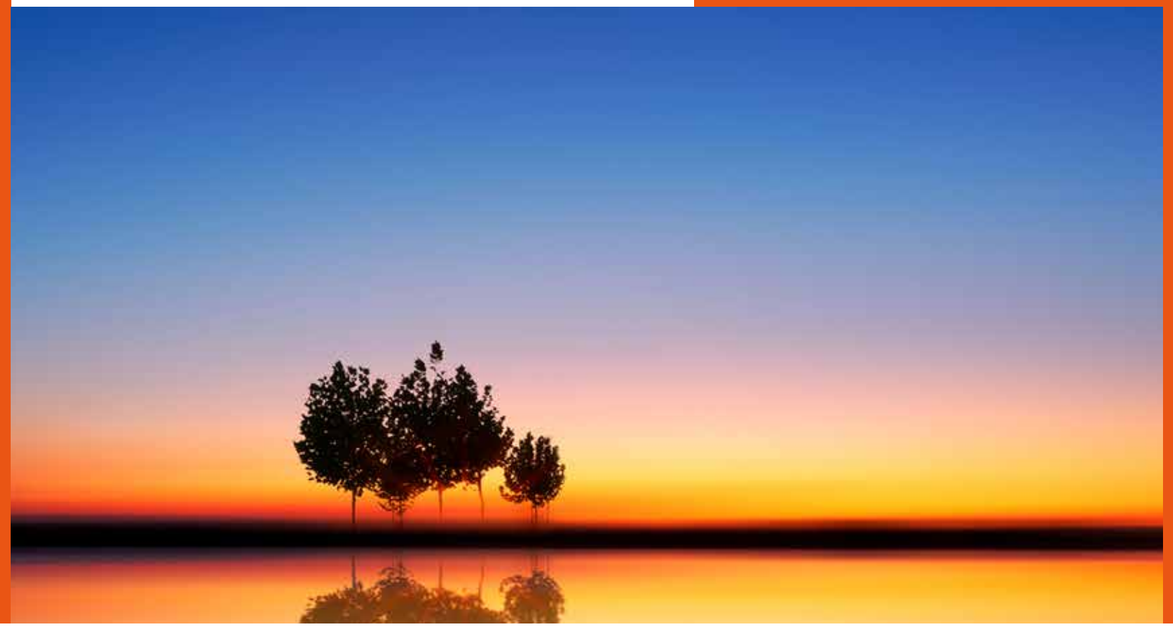

WW系列热泵烘干应用涡旋压缩机

R454C/R455A/R454B/R32

WW Series Scroll Compressor for Heat Pump & Stoving Application

目录Catalog

公司简介 About us 02

命名规则 Nomenclature 03

应用范围 Application Range 04

技术参数 Specification 05

制热量 Heating Capacity 19

外形尺寸 Dimensional Information 69

苏州为山之环境技术有限公司

成立于 2018 年 6 月，是一家专注研发、生产节能环保型涡旋压缩机的创新型高新技术企业。

公司深耕涡旋压缩机核心技术研发，已实现关键技术重大突破，产品广泛适用于工业制冷、商用热水、工业蒸汽、农业烘干、制冷工程、精密空调、轨道交通制冷、转轮除湿、工业余热回收等众多领域。

企业配备先进自动化生产线及高精度检测、加工设备，依托创新生产工艺流程，产品规格覆盖 2 匹至 25 匹，先后通过 CCC、CE、CB、ROHS & REACH、ISO 9001 等多项国内外权威认证。

公司高度重视知识产权布局与保护，拥有多项自主专利技术，先后获评江苏省民营科技企业、国家级高新技术企业等荣誉资质。

面向未来，公司将持续加大科研研发投入，专注为客户提供绿色环保热泵及冷冻压缩机整体解决方案，以降低全球碳排放为企业使命，聚力赋能节能环保产业发展，共建绿色生态家园。

Suzhou Weishans Climate Technology Co., Ltd

Established in June 2018, the company is an innovative high-tech enterprise dedicated to the R&D and manufacturing of energy-efficient and eco-friendly scroll compressors.

The company is deeply committed to the R&D of core scroll compressor technologies, having achieved significant breakthroughs in key technical areas. Its products are widely applicable across numerous fields, including industrial refrigeration, commercial hot water systems, industrial steam generation, agricultural drying, refrigeration engineering, precision air conditioning, rail transit cooling, desiccant dehumidification, and industrial waste heat recovery.

Equipped with advanced automated production lines as well as high-precision testing and processing equipment, and leveraging innovative manufacturing processes, the company offers a product range spanning specifications from 2 to 25 horsepower. Its products have successfully obtained numerous authoritative domestic and international certifications, including CCC, CE, CB, RoHS & REACH, and ISO 9001.

The company places great emphasis on intellectual property strategy and protection; it holds numerous proprietary patented technologies and has successively been recognized with prestigious credentials, such as "Private Scientific and Technological Enterprise of Jiangsu Province" and "National High-tech Enterprise."

Looking toward the future, the company will continue to increase its investment in scientific research and development. It remains focused on providing customers with comprehensive solutions for green, eco-friendly heat pumps and refrigeration compressors. With the corporate mission of reducing global carbon emissions, the company is dedicated to empowering the growth of the energy-saving and environmental protection industry, working together to build a green and sustainable ecological home.

命名规则 Nomenclature

W W 125 K E - T F D - G N 1

系列代码 Series Code
W-为山涡旋压缩机系列
Weishan Series

压缩机家族序列代码 Compressor Family Series
W - 热泵热水应用
Heat Pump for Heating Water

压缩机标称能力代码 Compressor Nominal Capability Code
表示在60Hz，ARI工况下制冷量，单位：Btu/Hr
ARI Operating at 60Hz, Unit:Btu/Hr

能力系数代码 Capacity Multiplier
*H*100*
K*1000

润滑方式代码 Lubrication Oil
M-矿物油*Mineral Oil/ R22*
E-*POE Oil* 脂类油/R454C/R455A
R-*POE Oil* 脂类油/R32
P-*POE Oil* 脂类油/R454B

电机保护方式代码 Motor Protection
F-内置保护器
Internal Protector
W-外置保护器
External Protector

电机相数代码 Motor Phase
P-单相*Single Phase*
T-三相*Three Phase*

电源代码 Power
P-380V 50Hz
T-380V 60Hz
J-220-240V-1 50Hz
D-460V-3 60Hz/380-420V-3 50Hz
V-220V-1 50Hz/208-230V-1 60Hz
5-200-220V-3 50Hz/200-230V-3 60Hz

配置代码 Model Code
1-标准配置
Standard Configuration

冷却方式 Cooling Model
N-无配置 *None*

连接代码 Fitting Connection Code
N-无视液镜；焊接口
None and Welding Joint
G-有视液镜；焊接口
Sight Glasses and Welding Joint
S-有视液镜；螺纹口
Sight Glasses and Solenoid Joint

Application Range 应用范围

WW454B/WW454B EVI

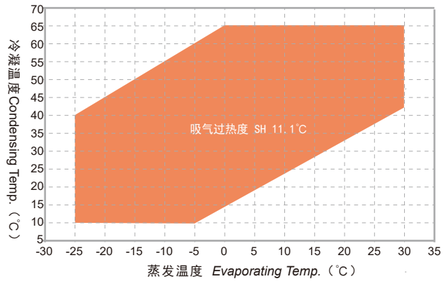

WW R32

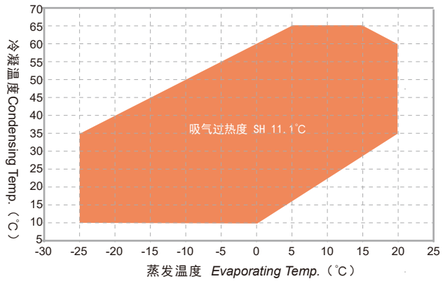

WW455A

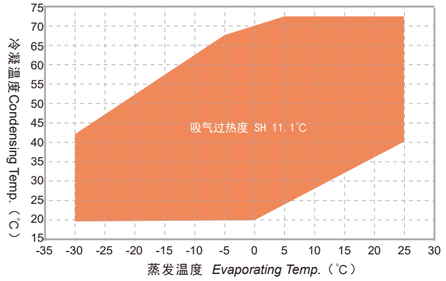

WW455A EVI

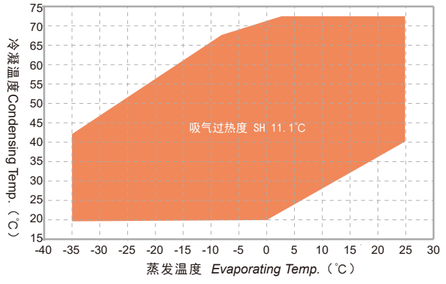

WW454C

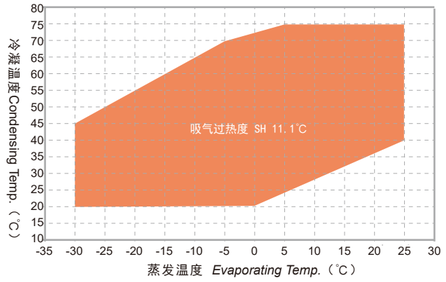

WW454C EVI

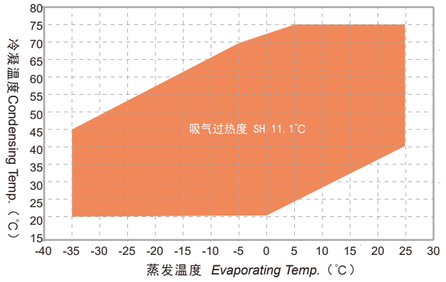

型号 Model		WW28KE-TFD-GN1	WW34KE-TFD-GN1	WW48KE-TFD-GN1	WW61KE-TFD-GN1	WW72KE-TFD-GN1	WW79KE-TFD-GN1	WW94KE-TFD-GN1
电制 Motor Power		380-420V/3~/50Hz or 460V/3~/60Hz						
名义功率 Nominal Power (HP)		2	3	4	5	6	7	8
排量 Displacement (cc/Rev)		37.2	50.6	63.9	84.5	98.9	108	127
制冷剂 Refrigerant		R454C						
名义制热量 Nominal Capacity (W)		7361	10013	13097	16849	19564	21268	25009
名义输入功率 Nominal Power (W)		1900	2584	3359	4244	5044	5512	6482
名义工况能效比 COP (W/W)		3.87	3.88	3.9	3.97	3.88	3.86	3.86
名义工况电流 Nominal Operating Current (A)		3.4	4.6	5.9	7.5	8.9	9.7	11.5
堵转电流 LRA (A)		38.8	38.8	38.8	59.3	83.6	83.6	117
最大运行电流 MOC (A)		5.4	7.3	9.4	12.0	14.3	15.6	18.4
曲轴箱加热器功率 Crankcase Heater (W)		70						90
接管尺寸 Fitting ID Size (mm)	排气管Dis.Tube	12.94-13.10						22.37-22.51
	吸气管 Suc.Tube	22.37-22.51						34.97-35.10
外形尺寸 Dimension (mm)	长(L)	244.8				257.01		283.04
	宽(W)	230.5				230.5		240.5
	高(H)	402.55				442.7		522.7
底脚安装尺寸 Mounting Dim. (mm)		190.5x190.5						
润滑油类型 Lubrication Oil		POE						
润滑油初次充注量 Lubrication Oil Initial Charge (L)		1.4	1.4	1.4	1.4	1.8	1.8	3
润滑油重新充注量 Lubrication Oil Recharge (L)		1.2	1.2	1.2	1.2	1.6	1.6	2.8
最大工作压力 Maxium Operating Pressure (MPa)	高压侧 High Pressure Side	3.0						
	低压侧 Low Pressure Side	2.0						
重量 Weight (kg)		28	28	28	31	38	38	66

注：蒸发5. 0˚C, 冷凝55. 0˚C, 过热11. 1K, 过冷8. 3K, 环温35. 0˚C
Note: Evaporating Temperature 5.0˚C, Condensing Temperating 55.0˚C, Superheating 11.1K, Subcooling 8.3K, Ambient Temperating 35.0˚C

型号 Model		WW108KE-TFD-GN1	WW125KE-TFD-GN1	WW138KE-TFD-GN1	WW154KE-TFD-GN1	WW170KE-TFD-GN1	WW250KE-TWD-GN1	WW300KE-TWD-GN1
电制 Motor Power		380-420V/3~/50Hz or 460V/3~/60Hz						
名义功率 Nominal Power (HP)		9	10	12	13	15	20	25
排量 Displacement (cc/Rev)		147.7	166.1	190.8	209	248.9	325	400
制冷剂 Refrigerant		R454C						
名义制热量 Nominal Capacity (W)		29086	32709	37573	41157	49014	64000	78769
名义输入功率 Nominal Power (W)		7538	8477	9738	10667	12703	16587	20415
名义工况能效比 COP (W/W)		3.86	3.86	3.86	3.86	3.86	3.86	3.86
名义工况电流 Nominal Operating Current (A)		13.3	15.0	17.2	18.9	22.4	29.3	36.1
堵转电流 LRA (A)		117	117	117	117	117	267.9	304
最大运行电流 MOC (A)		21.3	24.0	27.6	30.2	36.0	47.0	57.8
曲轴箱加热器功率 Crankcase Heater (W)		90						
接管尺寸 Fitting ID Size (mm)	排气管Dis.Tube	22.37-22.51		22.37-22.51			28.81-28.95	
	吸气管 Suc.Tube	34.97-35.10		34.97-35.10			34.97-35.10	
外形尺寸 Dimension (mm)	长(L)	283.04		283.04			270.81	
	宽(W)	240.5		235.5			240.5	
	高(H)	522.7		522.7			663.7	
底脚安装尺寸 Mounting Dim. (mm)		190.5x190.5						
润滑油类型 Lubrication Oil		POE						
润滑油初次充注量 Lubrication Oil Initial Charge (L)		3	3	3	3.2	3.2	5	5
润滑油重新充注量 Lubrication Oil Recharge (L)		2.8	2.8	2.8	3	3	4.8	4.8
最大工作压力 Maxium Operating Pressure (MPa)	高压侧 High Pressure Side	3.0						
	低压侧 Low Pressure Side	2.0						
重量 Weight (kg)		66	66	66	66	66	92	92

注：蒸发5. 0˚C, 冷凝55. 0˚C, 过热11. 1K, 过冷8. 3K, 环温35. 0˚C
Note: Evaporating Temperature 5.0˚C, Condensing Temperating 55.0˚C, Superheating 11.1K, Subcooling 8.3K, Ambient Temperating 35.0˚C

型号 Model		WW28KE-TFD-GN1	WW34KE-TFD-GN1	WW48KE-TFD-GN1	WW61KE-TFD-GN1	WW72KE-TFD-GN1	WW79KE-TFD-GN1	WW94KE-TFD-GN1
电制 Motor Power		380-420V/3~/50Hz or 460V/3~/60Hz						
名义功率 Nominal Power (HP)		2	3	4	5	6	7	8
排量 Displacement (cc/Rev)		37.2	50.6	63.9	84.5	98.9	108	127
制冷剂 Refrigerant		R455A						
名义制热量 Nominal Capacity (W)		7796	10604	13878	17858	20719	22509	26469
名义输入功率 Nominal Power (W)		1972	2682	3495	4414	5247	5734	6743
名义工况能效比 COP (W/W)		3.95	3.95	3.97	4.05	3.95	3.93	3.93
名义工况电流 Nominal Operating Current (A)		3.5	4.7	6.2	7.8	9.3	10.1	11.9
堵转电流 LRA (A)		38.8	38.8	38.8	59.3	83.6	83.6	117
最大运行电流 MOC (A)		5.4	7.3	9.4	12.0	14.3	15.6	18.4
曲轴箱加热器功率 Crankcase Heater (W)		70						90
接管尺寸 Fitting ID Size (mm)	排气管Dis.Tube	12.94-13.10						22.37-22.51
	吸气管 Suc.Tube	22.37-22.51						34.97-35.10
外形尺寸 Dimension (mm)	长(L)	244.8				257.01		283.04
	宽(W)	230.5				230.5		240.5
	高(H)	402.55				442.7		522.7
底脚安装尺寸 Mounting Dim. (mm)		190.5x190.5						
润滑油类型 Lubrication Oil		POE						
润滑油初次充注量 Lubrication Oil Initial Charge (L)		1.4	1.4	1.4	1.4	1.8	1.8	3
润滑油重新充注量 Lubrication Oil Recharge (L)		1.2	1.2	1.2	1.2	1.6	1.6	2.8
最大工作压力 Maxium Operating Pressure (MPa)	高压侧 High Pressure Side	3.0						
	低压侧 Low Pressure Side	2.0						
重量 Weight (kg)		28	28	28	31	38	38	66

注：蒸发5. 0˚C, 冷凝55. 0˚C, 过热11. 1K, 过冷8. 3K, 环温35. 0˚C
Note: Evaporating Temperature 5.0˚C, Condensing Temperating 55.0˚C, Superheating 11.1K, Subcooling 8.3K, Ambient Temperating 35.0˚C

型号 Model		WW108KE-TFD-GN1	WW125KE-TFD-GN1	WW138KE-TFD-GN1	WW154KE-TFD-GN1	WW170KE-TFD-GN1	WW250KE-TWD-GN1	WW300KE-TWD-GN1
电制 Motor Power		380-420V/3~/50Hz or 460V/3~/60Hz						
名义功率 Nominal Power (HP)		9	10	12	13	15	20	25
排量 Displacement (cc/Rev)		147.7	166.1	190.8	209	248.9	325	400
制冷剂 Refrigerant		R455A						
名义制热量 Nominal Capacity (W)		30783	34618	39766	43559	51875	67735	83367
名义输入功率 Nominal Power (W)		7842	8819	10131	11097	13216	17256	21238
名义工况能效比 COP (W/W)		3.93	3.93	3.93	3.93	3.93	3.93	3.93
名义工况电流 Nominal Operating Current (A)		13.9	15.6	17.9	19.6	23.4	30.5	37.5
堵转电流 LRA (A)		117	117	117	117	117	267.9	304
最大运行电流 MOC (A)		21.3	24.0	27.6	30.2	36.0	47.0	57.8
曲轴箱加热器功率 Crankcase Heater (W)		90						
接管尺寸 Fitting ID Size (mm)	排气管Dis.Tube	22.37-22.51		22.37-22.51			28.81-28.95	
	吸气管 Suc.Tube	34.97-35.10		34.97-35.10			34.97-35.10	
外形尺寸 Dimension (mm)	长(L)	283.04		283.04			270.81	
	宽(W)	240.5		235.5			240.5	
	高(H)	522.7		522.7			663.7	
底脚安装尺寸 Mounting Dim. (mm)		190.5x190.5						
润滑油类型 Lubrication Oil		POE						
润滑油初次充注量 Lubrication Oil Initial Charge (L)		3	3	3	3.2	3.2	5	5
润滑油重新充注量 Lubrication Oil Recharge (L)		2.8	2.8	2.8	3	3	4.8	4.8
最大工作压力 Maxium Operating Pressure (MPa)	高压侧 High Pressure Side	3.0						
	低压侧 Low Pressure Side	2.0						
重量 Weight (kg)		66	66	66	66	66	92	92

注：蒸发5. 0˚C, 冷凝55. 0˚C, 过热11. 1K, 过冷8. 3K, 环温35. 0˚C
Note: Evaporating Temperature 5.0˚C, Condensing Temperating 55.0˚C, Superheating 11.1K, Subcooling 8.3K, Ambient Temperating 35.0˚C

型号 Model		WW28KP-TFD-GN1	WW34KP-TFD-GN1	WW48KP-TFD-GN1	WW61KP-TFD-GN1	WW72KP-TFD-GN1	WW81KP-TFD-GN1	WW94KP-TFD-GN1
电制 Motor Power		380-420V/3~/50Hz or 460V/3~/60Hz						
名义功率 Nominal Power (HP)		2	3	4	5	6	7	8
排量 Displacement (cc/Rev)		26.7	32.3	48	63.9	67.1	77.2	89.8
制冷剂 Refrigerant		R454B						
名义制热量 Nominal Capacity (W)		8149	9858	14563	19628	20611	24270	28231
名义输入功率 Nominal Power (W)		2206	2669	3896	5048	5300	6399	7444
名义工况能效比 COP (W/W)		3.69	3.69	3.74	3.89	3.89	3.79	3.79
名义工况电流 Nominal Operating Current (A)		3.9	4.7	6.9	8.9	9.4	11.3	13.2
堵转电流 LRA (A)		38.8	38.8	38.8	59.3	76	76	103.4
最大运行电流 MOC (A)		6.3	8.5	11.3	15.1	15.8	18.2	21.2
曲轴箱加热器功率 Crankcase Heater (W)		70						
接管尺寸 Fitting ID Size (mm)	排气管Dis.Tube	12.94-13.10						
	吸气管 Suc.Tube	22.37-22.51						
外形尺寸 Dimension (mm)	长(L)	244.8						257.01
	宽(W)	230.5						230.5
	高(H)	402.55						442.7
底脚安装尺寸 Mounting Dim. (mm)		190.5x190.5						
润滑油类型 Lubrication Oil		POE						
润滑油初次充注量 Lubrication Oil Initial Charge (L)		1.4	1.4	1.4	1.4	1.4	1.4	1.8
润滑油重新充注量 Lubrication Oil Recharge (L)		1.2	1.2	1.2	1.2	1.2	1.2	1.6
最大工作压力 Maxium Operating Pressure (MPa)	高压侧 High Pressure Side	4.3						
	低压侧 Low Pressure Side	2.0						
重量 Weight (kg)		28	28	28	30	31	31	38

注：蒸发5. 0˚C, 冷凝55. 0˚C, 过热11. 1K, 过冷8. 3K, 环温35. 0˚C
Note: Evaporating Temperature 5.0˚C, Condensing Temperating 55.0˚C, Superheating 11.1K, Subcooling 8.3K, Ambient Temperating 35.0˚C

型号 Model		WW108KP-TFD-GN1	WW120KP-TFD-GN1	WW144KP-TFD-GN1	WW154KP-TFD-GN1	WW170KP-TFD-GN1	WW235KP-TWD-GN1	WW292KP-TWD-GN1
电制 Motor Power		380-420V/3~/50Hz or 460V/3~/60Hz						
名义功率 Nominal Power (HP)		9	10	12	13	15	20	25
排量 Displacement (cc/Rev)		98.9	108	124.1	143.1	167.8	212.7	262.8
制冷剂 Refrigerant		R454B						
名义制热量 Nominal Capacity (W)		31092	33953	39014	44988	52753	66868	82619
名义输入功率 Nominal Power (W)		8198	8953	10287	11862	13910	17632	21785
名义工况能效比 COP (W/W)		3.79	3.79	3.79	3.79	3.79	3.79	3.79
名义工况电流 Nominal Operating Current (A)		14.5	15.8	18.2	21	24.6	31.2	38.5
堵转电流 LRA (A)		103.4	103.4	117	117	117	267.9	267.9
最大运行电流 MOC (A)		23.3	26.4	29.3	33.7	39.6	50.2	62.0
曲轴箱加热器功率 Crankcase Heater (W)		70		90				
接管尺寸 Fitting ID Size (mm)	排气管Dis.Tube	12.94-13.10		22.37-22.51			28.81-28.95	
	吸气管 Suc.Tube	22.37-22.51		34.97-35.10			34.97-35.10	
外形尺寸 Dimension (mm)	长(L)	257.01		283.04			270.81	
	宽(W)	230.5		240.5			240.5	
	高(H)	442.7		522.7			663.7	
底脚安装尺寸 Mounting Dim. (mm)		190.5x190.5						
润滑油类型 Lubrication Oil		POE						
润滑油初次充注量 Lubrication Oil Initial Charge (L)		1.8	1.8	3	3	3	5	5
润滑油重新充注量 Lubrication Oil Recharge (L)		1.6	1.6	2.8	2.8	2.8	4.8	4.8
最大工作压力 Maxium Operating Pressure (MPa)	高压侧 High Pressure Side	4.3						
	低压侧 Low Pressure Side	2.0						
重量 Weight (kg)		43	43	66	66	66	92	92

注：蒸发5. 0˚C, 冷凝55. 0˚C, 过热11. 1K, 过冷8. 3K, 环温35. 0˚C
Note: Evaporating Temperature 5.0˚C, Condensing Temperating 55.0˚C, Superheating 11.1K, Subcooling 8.3K, Ambient Temperating 35.0˚C

型号 Model		WW28KR-TFD-GN1	WW34KR-TFD-GN1	WW48KR-TFD-GN1	WW61KR-TFD-GN1	WW72KR-TFD-GN1	WW81KR-TFD-GN1	WW94KR-TFD-GN1
电制 Motor Power		380-420V/3~/50Hz or 460V/3~/60Hz						
名义功率 Nominal Power (HP)		2	3	4	5	6	7	8
排量 Displacement (cc/Rev)		26.7	32.3	48	63.9	67.1	77.2	89.8
制冷剂 Refrigerant		R32						
名义制热量 Nominal Capacity (W)		8291	10031	14905	22445	23093	26569	30905
名义输入功率 Nominal Power (W)		2483	3004	4464	5857	6078	6993	8134
名义工况能效比 COP (W/W)		3.34	3.34	3.34	3.83	3.8	3.8	3.8
名义工况电流 Nominal Operating Current (A)		4.3	5.2	7.7	10.1	10.5	12.1	14
堵转电流 LRA (A)		38.8	38.8	38.8	59.3	76	76	103.4
最大运行电流 MOC (A)		6.3	8.5	11.3	15.1	15.8	18.2	21.2
曲轴箱加热器功率 Crankcase Heater (W)		70						
接管尺寸 Fitting ID Size (mm)	排气管Dis.Tube	12.94-13.10						
	吸气管 Suc.Tube	22.37-22.51						
外形尺寸 Dimension (mm)	长(L)	244.8						257.01
	宽(W)	230.5						230.5
	高(H)	402.55						442.7
底脚安装尺寸 Mounting Dim. (mm)		190.5x190.5						
润滑油类型 Lubrication Oil		POE						
润滑油初次充注量 Lubrication Oil Initial Charge (L)		1.4	1.4	1.4	1.4	1.4	1.4	1.8
润滑油重新充注量 Lubrication Oil Recharge (L)		1.2	1.2	1.2	1.2	1.2	1.2	1.6
最大工作压力 Maxium Operating Pressure (MPa)	高压侧 High Pressure Side	4.3						
	低压侧 Low Pressure Side	2.0						
重量 Weight (kg)		28	28	28	30	31	31	38

注：蒸发5. 0˚C, 冷凝55. 0˚C, 过热11. 1K, 过冷8. 3K, 环温35. 0˚C
Note: Evaporating Temperature 5.0˚C, Condensing Temperating 55.0˚C, Superheating 11.1K, Subcooling 8.3K, Ambient Temperating 35.0˚C

型号 Model		WW108KR-TFD-GN1	WW120KR-TFD-GN1	WW144KR-TFD-GN1	WW154KR-TFD-GN1	WW170KR-TFD-GN1	WW235KR-TWD-GN1	WW292KR-TWD-GN1
电制 Motor Power		380-420V/3~/50Hz or 460V/3~/60Hz						
名义功率 Nominal Power (HP)		9	10	12	13	15	20	25
排量 Displacement (cc/Rev)		98.9	108	124.1	143.1	167.8	212.7	262.8
制冷剂 Refrigerant		R32						
名义制热量 Nominal Capacity (W)		34037	35319	43708	49248	57543	75714	90444
名义输入功率 Nominal Power (W)		8958	9539	11504	12962	15145	19928	23805
名义工况能效比 COP (W/W)		3.8	3.8	3.7	3.8	3.8	3.8	3.8
名义工况电流 Nominal Operating Current (A)		15.5	16.5	19.9	22.4	26.2	34.4	41.1
堵转电流 LRA (A)		103.4	103.4	117	117	117	267.9	267.9
最大运行电流 MOC (A)		23.3	26.4	29.3	33.7	39.6	50.2	62.0
曲轴箱加热器功率 Crankcase Heater (W)		70		90				
接管尺寸 Fitting ID Size (mm)	排气管Dis.Tube	12.94-13.10		22.37-22.51			28.81-28.95	
	吸气管 Suc.Tube	22.37-22.51		34.97-35.10			34.97-35.10	
外形尺寸 Dimension (mm)	长(L)	257.01		283.04			270.81	
	宽(W)	230.5		240.5			240.5	
	高(H)	442.7		522.7			663.7	
底脚安装尺寸 Mounting Dim. (mm)		190.5x190.5						
润滑油类型 Lubrication Oil		POE						
润滑油初次充注量 Lubrication Oil Initial Charge (L)		1.8	1.8	3	3	3	5	5
润滑油重新充注量 Lubrication Oil Recharge (L)		1.6	1.6	2.8	2.8	2.8	4.8	4.8
最大工作压力 Maxium Operating Pressure (MPa)	高压侧 High Pressure Side	4.3						
	低压侧 Low Pressure Side	2.0						
重量 Weight (kg)		43	43	66	66	66	92	92

注：蒸发5. 0˚C, 冷凝55. 0˚C, 过热11. 1K, 过冷8. 3K, 环温35. 0˚C
Note: Evaporating Temperature 5.0˚C, Condensing Temperating 55.0˚C, Superheating 11.1K, Subcooling 8.3K, Ambient Temperating 35.0˚C

型号 Model		WW28KE-TFD-GV1	WW34KE-TFD-GV1	WW48KE-TFD-GV1	WW61KE-TFD-GV1	WW72KE-TFD-GV1	WW79KE-TFD-GV1	WW94KE-TFD-GV1
电制 Motor Power		380-420V/3~/50Hz or 460V/3~/60Hz						
名义功率 Nominal Power (HP)		2	3	4	5	6	7	8
排量 Displacement (cc/Rev)		37.2	50.6	63.9	84.5	98.9	108	127
制冷剂 Refrigerant		R454C						
名义制热量 Nominal Capacity (W)		8509	11574	15276	19551	22745	24557	28877
名义输入功率 Nominal Power (W)		2164	2943	3783	4830	5726	6263	7365
名义工况能效比 COP (W/W)		3.93	3.93	4.04	4.05	3.97	3.92	3.92
名义工况电流 Nominal Operating Current (A)		3.8	5.2	6.7	8.5	10.1	11.1	13.0
堵转电流 LRA (A)		38.8	38.8	38.8	59.3	83.6	83.6	117
最大运行电流 MOC (A)		5.4	7.3	9.4	12	14.3	15.6	18.4
曲轴箱加热器功率 Crankcase Heater (W)		70						90
接管尺寸 Fitting ID Size (mm)	排气管Dis.Tube	12.94-13.10						22.37-22.51
	吸气管 Suc.Tube	22.37-22.51						34.97-35.10
外形尺寸 Dimension (mm)	长(L)	244.8				257.01		283.04
	宽(W)	230.5				230.5		240.5
	高(H)	402.55				442.7		522.7
底脚安装尺寸 Mounting Dim. (mm)		190.5x190.5						
润滑油类型 Lubrication Oil		POE						
润滑油初次充注量 Lubrication Oil Initial Charge (L)		1.4	1.4	1.4	1.8	1.8	1.8	3.0
润滑油重新充注量 Lubrication Oil Recharge (L)		1.2	1.2	1.2	1.6	1.6	1.6	2.8
最大工作压力 Maxium Operating Pressure (MPa)	高压侧 High Pressure Side	3.0						
	低压侧 Low Pressure Side	2.0						
重量 Weight (kg)		28	28	28	31	38	38	66

注：蒸发5. 0˚C, 冷凝55. 0˚C, 过热11. 1K, 过冷8. 3K, 环温35. 0˚C, EVI打开
Note: Evaporating Temperature 5.0˚C, Condensing Temperating 55.0˚C, Superheating 11.1K, Subcooling 8.3K, Ambient Temperating 35.0˚C, EVI Open.

型号 Model		WW108KE-TFD-GV1	WW125KE-TFD-GV1	WW138KE-TFD-GV1	WW154KE-TFD-GV1	WW170KE-TFD-GV1	WW250KE-TWD-GV1	WW300KE-TWD-GV1
电制 Motor Power		380-420V/3~/50Hz or 460V/3~/60Hz						
名义功率 Nominal Power (HP)		9	10	12	13	15	20	25
排量 Displacement (cc/Rev)		147.7	166.1	190.8	209	248.9	325	400
制冷剂 Refrigerant		R454C						
名义制热量 Nominal Capacity (W)		33584	37768	43384	47522	56595	73898	90952
名义输入功率 Nominal Power (W)		8565	9632	11065	12120	14434	18847	23197
名义工况能效比 COP (W/W)		3.92	3.92	3.92	3.92	3.92	3.92	3.92
名义工况电流 Nominal Operating Current (A)		15.1	17.0	19.6	21.4	25.5	33.3	41.0
堵转电流 LRA (A)		117	117	117	117	117	267.9	304
最大运行电流 MOC (A)		21.3	24	27.6	30.2	36	47.0	57.8
曲轴箱加热器功率 Crankcase Heater (W)		90						
接管尺寸 Fitting ID Size (mm)	排气管Dis.Tube	22.37-22.51		22.37-22.51			28.81-28.95	
	吸气管 Suc.Tube	34.97-35.10		34.97-35.10			34.97-35.10	
外形尺寸 Dimension (mm)	长(L)	283.04		283.04			270.81	
	宽(W)	240.5		235.5			240.5	
	高(H)	522.7		522.7			663.7	
底脚安装尺寸 Mounting Dim. (mm)		190.5x190.5						
润滑油类型 Lubrication Oil		POE						
润滑油初次充注量 Lubrication Oil Initial Charge (L)		3.0	3.0	3.2	3.2	3.2	5.0	5.0
润滑油重新充注量 Lubrication Oil Recharge (L)		2.8	2.8	3	3	3	4.8	4.8
最大工作压力 Maxium Operating Pressure (MPa)	高压侧 High Pressure Side	3.0						
	低压侧 Low Pressure Side	2.0						
重量 Weight (kg)		66	66	66	66	66	92	92

注：蒸发5. 0˚C, 冷凝55. 0˚C, 过热11. 1K, 过冷8. 3K, 环温35. 0˚C, EVI打开
Note: Evaporating Temperature 5.0˚C, Condensing Temperating 55.0˚C, Superheating 11.1K, Subcooling 8.3K, Ambient Temperating 35.0˚C, EVI Open.

型号 Model		WW28KE-TFD-GV1	WW34KE-TFD-GV1	WW48KE-TFD-GV1	WW61KE-TFD-GV1	WW72KE-TFD-GV1	WW79KE-TFD-GV1	WW94KE-TFD-GV1
电制 Motor Power		380-420V/3~/50Hz or 460V/3~/60Hz						
名义功率 Nominal Power (HP)		2	3	4	5	6	7	8
排量 Displacement (cc/Rev)		37.2	50.6	63.9	84.5	98.9	108	127
制冷剂 Refrigerant		R455A						
名义制热量 Nominal Capacity (W)		8965	12194	15951	20496	23828	25840	30386
名义输入功率 Nominal Power (W)		2170	2952	3845	4856	5772	6308	7417
名义工况能效比 COP (W/W)		4.13	4.13	4.15	4.22	4.13	4.10	4.10
名义工况电流 Nominal Operating Current (A)		3.8	5.2	6.8	8.6	10.2	11.1	13.1
堵转电流 LRA (A)		38.8	38.8	38.8	59.3	83.6	83.6	117
最大运行电流 MOC (A)		5.4	7.3	9.4	12.0	14.3	15.6	18.4
曲轴箱加热器功率 Crankcase Heater (W)		70						90
接管尺寸 Fitting ID Size (mm)	排气管Dis.Tube	12.94-13.10						22.37-22.51
	吸气管 Suc.Tube	22.37-22.51						34.97-35.10
外形尺寸 Dimension (mm)	长(L)	244.8				257.01		283.04
	宽(W)	230.5				230.5		240.5
	高(H)	402.55				442.7		522.7
底脚安装尺寸 Mounting Dim. (mm)		190.5x190.5						
润滑油类型 Lubrication Oil		POE						
润滑油初次充注量 Lubrication Oil Initial Charge (L)		1.4	1.4	1.4	1.8	1.8	1.8	3.0
润滑油重新充注量 Lubrication Oil Recharge (L)		1.2	1.2	1.2	1.6	1.6	1.6	2.8
最大工作压力 Maxium Operating Pressure (MPa)	高压侧 High Pressure Side	3.0						
	低压侧 Low Pressure Side	2.0						
重量 Weight (kg)		28	28	28	31	38	38	66

注：蒸发5. 0˚C, 冷凝55. 0˚C, 过热11. 1K, 过冷8. 3K, 环温35. 0˚C, EVI打开
Note: Evaporating Temperature 5.0˚C, Condensing Temperating 55.0˚C, Superheating 11.1K, Subcooling 8.3K, Ambient Temperating 35.0˚C, EVI 0pen.

型号 Model		WW108KE-TFD-GV1	WW125KE-TFD-GV1	WW138KE-TFD-GV1	WW154KE-TFD-GV1	WW170KE-TFD-GV1	WW250KE-TWD-GV1	WW300KE-TWD-GV1
电制 Motor Power		380-420V/3~/50Hz or 460V/3~/60Hz						
名义功率 Nominal Power (HP)		9	10	12	13	15	20	25
排量 Displacement (cc/Rev)		147.7	166.1	190.8	209	248.9	325	400
制冷剂 Refrigerant		R455A						
名义制热量 Nominal Capacity (W)		35339	39742	45651	50006	59553	77760	95705
名义输入功率 Nominal Power (W)		8626	9701	11143	12206	14537	18981	23361
名义工况能效比 COP (W/W)		4.10	4.10	4.10	4.10	4.10	4.10	4.10
名义工况电流 Nominal Operating Current (A)		15.2	17.8	19.7	21.6	25.7	33.5	41.3
堵转电流 LRA (A)		117	117	117	117	117	267.9	304
最大运行电流 MOC (A)		21.3	24.0	27.6	30.2	36.0	47.0	57.8
曲轴箱加热器功率 Crankcase Heater (W)		90						
接管尺寸 Fitting ID Size (mm)	排气管Dis.Tube	22.37-22.51		22.37-22.51			28.81-28.95	
	吸气管 Suc.Tube	34.97-35.10		34.97-35.10			34.97-35.10	
外形尺寸 Dimension (mm)	长(L)	283.04		283.04			270.81	
	宽(W)	240.5		235.5			240.5	
	高(H)	522.7		522.7			663.7	
底脚安装尺寸 Mounting Dim. (mm)		190.5x190.5						
润滑油类型 Lubrication Oil		POE						
润滑油初次充注量 Lubrication Oil Initial Charge (L)		3.0	3.0	3.2	3.2	3.2	5.0	5.0
润滑油重新充注量 Lubrication Oil Recharge (L)		2.8	2.8	3	3	3	4.8	4.8
最大工作压力 Maxium Operating Pressure (MPa)	高压侧 High Pressure Side	3.0						
	低压侧 Low Pressure Side	2.0						
重量 Weight (kg)		66	66	66	66	66	92	92

注：蒸发5. 0˚C, 冷凝55. 0˚C, 过热11. 1K, 过冷8. 3K, 环温35. 0˚C, EVI打开
Note: Evaporating Temperature 5.0˚C, Condensing Temperating 55.0˚C, Superheating 11.1K, Subcooling 8.3K, Ambient Temperating 35.0˚C, EVI 0pen.

型号 Model		WW50HP-TFD-GV1	WW70HP-TFD-GV1	WW96HP-TFD-GV1	WW126HP-TFD-GV1	WW130HP-TFD-GV1	WW150HP-TFD-GV1	WW170HP-TFD-GV1
电制 Motor Power		380-420V/3~/50Hz or 460V/3~/60Hz						
名义功率 Nominal Power (HP)		2	3	4	5	6	7	8
排量 Displacement (cc/Rev)		26.7	36	48	63.9	67.1	77.2	89.8
制冷剂 Refrigerant		R454B						
名义制热量 Nominal Capacity (W)		10793	13056	19403	27885	29282	33690	39188
名义输入功率 Nominal Power (W)		2539	3071	4564	6092	6397	7360	8562
名义工况能效比 COP (W/W)		4.25	4.25	4.25	4.58	4.58	4.58	4.58
名义工况电流 Nominal Operating Current (A)		4.5	5.3	8.1	10.8	11.3	13	15.1
堵转电流 LRA (A)		38.8	38.8	38.8	59.3	76	76	103.4
最大运行电流 MOC (A)		6.3	8.5	11.3	15.1	15.8	18.2	21.2
曲轴箱加热器功率 Crankcase Heater (W)		70						
接管尺寸 Fitting ID Size (mm)	排气管Dis.Tube	12.94-13.10						
	吸气管 Suc.Tube	22.37-22.51						
外形尺寸 Dimension (mm)	长(L)	244.8						257.01
	宽(W)	230.5						230.5
	高(H)	402.55						442.7
底脚安装尺寸 Mounting Dim. (mm)		190.5x190.5						
润滑油类型 Lubrication Oil		POE						
润滑油初次充注量 Lubrication Oil Initial Charge (L)		1.4	1.4	1.4	1.4	1.4	1.4	1.8
润滑油重新充注量 Lubrication Oil Recharge (L)		1.2	1.2	1.2	1.2	1.2	1.2	1.6
最大工作压力 Maxium Operating Pressure (MPa)	高压侧 High Pressure Side	4.3						
	低压侧 Low Pressure Side	2.0						
重量 Weight (kg)		28	28	28	30	31	31	38

注：蒸发5. 0˚C, 冷凝55. 0˚C, 过热11. 1K, 过冷8. 3K, 环温35. 0˚C, EVI打开
Note: Evaporating Temperature 5.0˚C, Condensing Temperating 55.0˚C, Superheating 11.1K, Subcooling 8.3K, Ambient Temperating 35.0˚C, EVI Open.

型号 Model		WW200HP-TFD-GV1	WW220HP-TFD-GV1	WW258HP-TFD-GV1	WW286HP-TFD-GV1	WW336HP-TFD-GV1	WW430HP-TWD-GV1	WW520HP-TWD-GV1
电制 Motor Power		380-420V/3~/50Hz or 460V/3~/60Hz						
名义功率 Nominal Power (HP)		9	10	12	13	15	20	25
排量 Displacement (cc/Rev)		98.9	108	124.1	143.1	167.8	212.7	262.8
制冷剂 Refrigerant		R454B						
名义制热量 Nominal Capacity (W)		43159	48876	54156	62448	73227	92821	114684
名义输入功率 Nominal Power (W)		9429	10678	11832	13643	15998	20279	25056
名义工况能效比 COP (W/W)		4.58	4.58	4.58	4.58	4.58	4.58	4.58
名义工况电流 Nominal Operating Current (A)		16.7	18.9	20.9	24.1	28.3	35.8	44.3
堵转电流 LRA (A)		103.4	103.4	117	117	117	267.9	267.9
最大运行电流 MOC (A)		23.3	26.4	29.3	33.7	39.6	50.2	62.0
曲轴箱加热器功率 Crankcase Heater (W)		70		90				
接管尺寸 Fitting ID Size (mm)	排气管Dis.Tube	12.94-13.10		22.37-22.51			28.81-28.95	
	吸气管 Suc.Tube	22.37-22.51		34.97-35.10			34.97-35.10	
外形尺寸 Dimension (mm)	长(L)	257.01		283.04			270.81	
	宽(W)	230.5		240.5			240.5	
	高(H)	442.7		522.7			663.7	
底脚安装尺寸 Mounting Dim. (mm)		190.5x190.5						
润滑油类型 Lubrication Oil		POE						
润滑油初次充注量 Lubrication Oil Initial Charge (L)		1.8	1.8	3	3	3	5	5
润滑油重新充注量 Lubrication Oil Recharge (L)		1.6	1.6	2.8	2.8	2.8	4.8	4.8
最大工作压力 Maxium Operating Pressure (MPa)	高压侧 High Pressure Side	4.3						
	低压侧 Low Pressure Side	2.0						
重量 Weight (kg)		43	43	66	66	66	92	92

注：蒸发5. 0˚C, 冷凝55. 0˚C, 过热11. 1K, 过冷8. 3K, 环温35. 0˚C, EVI打开
Note: Evaporating Temperature 5.0˚C, Condensing Temperating 55.0˚C, Superheating 11.1K, Subcooling 8.3K, Ambient Temperating 35.0˚C, EVI Open.

型号 Model	项目 Item (KW)	Tc\Te	-30℃	-25℃	-20℃	-15℃	-10℃	-5℃	0℃	5℃	10℃	15℃	20℃	25℃
WW28KE-TFD-GN1	Q	75℃								6.55	7.52	8.61	9.83	11.16
	P									2.6	2.62	2.63	2.63	2.63
	Q	70℃						4.99	5.77	6.68	7.71	8.87	10.16	11.58
	P							2.35	2.38	2.41	2.43	2.44	2.45	2.46
	Q	65℃					4.35	5.05	5.89	6.86	7.96	9.19	10.55	12.04
	P						2.11	2.15	2.19	2.22	2.25	2.27	2.29	2.29
	Q	60℃				3.79	4.41	5.16	6.05	7.08	8.25	9.55	10.99	12.57
	P					1.86	1.92	1.97	2.01	2.05	2.09	2.11	2.13	2.14
	Q	55℃			3.31	3.83	4.5	5.31	6.27	7.36	8.6	9.97	11.49	13.15
	P				1.61	1.68	1.74	1.8	1.86	1.9	1.94	1.96	1.98	1.99
	Q	50℃		2.92	3.35	3.92	4.64	5.51	6.52	7.68	8.99	10.44	12.04	13.78
	P			1.35	1.44	1.52	1.59	1.65	1.71	1.76	1.8	1.82	1.84	1.85
	Q	45℃	2.63	2.95	3.42	4.04	4.82	5.75	6.83	8.05	9.43	10.96	12.64	14.47
	P		1.09	1.19	1.29	1.37	1.45	1.52	1.58	1.63	1.67	1.7	1.71	1.71
	Q	40℃	2.65	3.01	3.53	4.21	5.04	6.03	7.17	8.47	9.92	11.53	13.29	15.2
	P		0.95	1.06	1.16	1.25	1.33	1.4	1.46	1.51	1.55	1.58	1.59	1.58
	Q	35℃	2.71	3.11	3.68	4.41	5.29	6.34	7.56	8.92	10.45	12.14		
	P		0.83	0.94	1.05	1.14	1.23	1.3	1.36	1.41	1.44	1.46		
	Q	30℃	2.79	3.24	3.85	4.64	5.59	6.7	7.98	9.42	11.03			
	P		0.73	0.85	0.96	1.06	1.14	1.21	1.27	1.31	1.34			
	Q	25℃	2.9	3.39	4.06	4.91	5.92	7.1	8.44	9.96				
	P		0.66	0.78	0.89	0.98	1.07	1.14	1.19	1.23				
	Q	20℃	3.03	3.58	4.3	5.2	6.28	7.53	8.95					
	P		0.6	0.72	0.83	0.93	1.01	1.07	1.12					
WW34KE-TFD-GN1	Q	75℃								8.91	10.23	11.71	13.37	15.19
	P									3.54	3.56	3.57	3.58	3.57
	Q	70℃						6.79	7.85	9.08	10.49	12.07	13.82	15.75
	P							3.2	3.24	3.27	3.3	3.32	3.34	3.34
	Q	65℃					5.92	6.87	8.01	9.32	10.82	12.5	14.35	16.38
	P						2.87	2.93	2.98	3.02	3.06	3.09	3.11	3.12
	Q	60℃				5.15	5.99	7.02	8.23	9.64	11.22	13	14.95	17.1
	P					2.53	2.61	2.68	2.74	2.79	2.84	2.87	2.9	2.91
	Q	55℃			4.5	5.22	6.12	7.23	8.52	10.01	11.69	13.57	15.63	17.88
	P				2.18	2.28	2.37	2.45	2.52	2.58	2.63	2.67	2.69	2.71
	Q	50℃		3.98	4.55	5.33	6.31	7.49	8.87	10.45	12.23	14.21	16.38	18.74
	P			1.84	1.95	2.06	2.16	2.25	2.33	2.39	2.44	2.48	2.51	2.51
	Q	45℃	3.58	4.01	4.65	5.5	6.56	7.82	9.28	10.96	12.83	14.91	17.19	19.68
	P		1.48	1.62	1.75	1.87	1.98	2.07	2.15	2.22	2.27	2.31	2.33	2.33
	Q	40℃	3.61	4.1	4.8	5.72	6.85	8.2	9.75	11.52	13.49	15.68	18.07	20.68
	P		1.29	1.44	1.58	1.7	1.81	1.91	1.99	2.06	2.11	2.14	2.16	2.15
	Q	35℃	3.68	4.23	5	5.99	7.2	8.63	10.28	12.14	14.22	16.51		
	P		1.13	1.29	1.43	1.56	1.67	1.77	1.85	1.92	1.96	1.99		
	Q	30℃	3.79	4.4	5.24	6.31	7.6	9.12	10.86	12.82	15			
	P		1	1.16	1.31	1.44	1.55	1.65	1.73	1.79	1.83			
	Q	25℃	3.94	4.62	5.53	6.67	8.05	9.65	11.49	13.55				
	P		0.89	1.06	1.21	1.34	1.45	1.55	1.62	1.67				
	Q	20℃	4.12	4.87	5.86	7.08	8.54	10.24	12.17					
	P		0.82	0.99	1.13	1.26	1.37	1.46	1.53					

注：以上数据基于 11.1K 吸气过热度，8.3K 过冷度
Note: The above data are based on 11.1K superheating and 8.3K subcooling

型号 Model	项目 Item (KW)	Tc\Te	-30℃	-25℃	-20℃	-15℃	-10℃	-5℃	0℃	5℃	10℃	15℃	20℃	25℃
WW48KE-TFD-GN1	Q	75℃								12.01	13.93	16.1	18.51	21.16
	P									5	5.13	5.25	5.36	5.46
	Q	70℃						8.92	10.4	12.13	14.12	16.36	18.85	21.58
	P							4.28	4.41	4.54	4.65	4.75	4.84	4.92
	Q	65℃					7.72	9	10.55	12.36	14.42	16.74	19.3	22.1
	P						3.75	3.88	4	4.11	4.21	4.29	4.37	4.43
	Q	60℃				6.74	7.83	9.18	10.8	12.68	14.82	17.21	19.86	22.75
	P					3.28	3.4	3.52	3.62	3.72	3.8	3.87	3.93	3.98
	Q	55℃			5.97	6.86	8.01	9.44	11.14	13.1	15.32	17.8	20.53	23.51
	P				2.86	2.98	3.09	3.19	3.28	3.36	3.43	3.49	3.54	3.57
	Q	50℃		5.42	6.09	7.05	8.28	9.79	11.56	13.61	15.91	18.48	21.3	24.38
	P			2.48	2.59	2.7	2.8	2.89	2.97	3.04	3.1	3.14	3.18	3.2
	Q	45℃	5.06	5.52	6.28	7.31	8.62	10.21	12.08	14.21	16.61	19.27	22.19	25.36
	P		2.14	2.25	2.36	2.45	2.54	2.62	2.69	2.75	2.8	2.84	2.86	2.88
	Q	40℃	5.15	5.7	6.53	7.64	9.04	10.72	12.67	14.9	17.39	20.15	23.17	26.45
	P		1.95	2.05	2.15	2.24	2.32	2.39	2.45	2.5	2.54	2.57	2.58	2.59
	Q	35℃	5.3	5.92	6.84	8.05	9.53	11.31	13.36	15.68	18.27	21.14		
	P		1.78	1.88	1.97	2.05	2.12	2.19	2.24	2.28	2.32	2.34		
	Q	30℃	5.5	6.21	7.22	8.51	10.1	11.97	14.12	16.55	19.25			
	P		1.64	1.73	1.82	1.89	1.96	2.02	2.06	2.1	2.13			
	Q	25℃	5.75	6.56	7.66	9.05	10.73	12.71	14.96	17.5				
	P		1.53	1.61	1.69	1.76	1.82	1.88	1.92	1.95				
	Q	20℃	6.05	6.95	8.15	9.65	11.44	13.52	15.88					
	P		1.43	1.52	1.59	1.66	1.72	1.77	1.81					
WW61KE-TFD-GN1	Q	75℃								15.68	18.01	20.6	23.45	26.56
	P									6.4	6.55	6.67	6.77	6.84
	Q	70℃						11.82	13.68	15.82	18.23	20.9	23.85	27.05
	P							5.48	5.65	5.79	5.92	6.02	6.1	6.16
	Q	65℃					10.26	11.91	13.85	16.06	18.56	21.32	24.36	27.68
	P						4.79	4.96	5.1	5.23	5.34	5.42	5.49	5.54
	Q	60℃				8.93	10.37	12.09	14.11	16.41	18.99	21.86	25	28.43
	P					4.18	4.34	4.48	4.61	4.71	4.8	4.88	4.93	4.97
	Q	55℃			7.85	9.05	10.56	12.36	14.46	16.85	19.53	22.5	25.76	29.3
	P				3.64	3.79	3.93	4.05	4.15	4.24	4.32	4.38	4.43	4.46
	Q	50℃		7.01	7.97	9.25	10.83	12.72	14.91	17.39	20.18	23.26	26.64	30.31
	P			3.18	3.32	3.44	3.56	3.66	3.75	3.82	3.89	3.94	3.98	4.01
	Q	45℃	6.41	7.13	8.17	9.52	11.19	13.16	15.45	18.04	20.94	24.14	27.64	31.44
	P		2.79	2.91	3.03	3.13	3.22	3.31	3.38	3.44	3.5	3.55	3.58	3.61
	Q	40℃	6.54	7.32	8.44	9.87	11.62	13.7	16.09	18.79	21.81	25.13	28.77	32.71
	P		2.58	2.68	2.77	2.86	2.93	3	3.06	3.11	3.16	3.2	3.24	3.26
	Q	35℃	6.71	7.58	8.77	10.3	12.15	14.32	16.82	19.64	22.78	26.24		
	P		2.41	2.48	2.55	2.62	2.68	2.73	2.78	2.83	2.87	2.91		
	Q	30℃	6.95	7.89	9.18	10.8	12.75	15.04	17.66	20.6	23.87			
	P		2.26	2.32	2.37	2.42	2.46	2.51	2.55	2.59	2.63			
	Q	25℃	7.24	8.28	9.65	11.38	13.44	15.84	18.59	21.66				
	P		2.15	2.18	2.22	2.25	2.29	2.32	2.36	2.39				
	Q	20℃	7.59	8.72	10.2	12.04	14.22	16.74	19.61					
	P		2.06	2.08	2.1	2.12	2.15	2.18	2.21					

注：以上数据基于 11.1K 吸气过热度，8.3K 过冷度
Note: The above data are based on 11.1K superheating and 8.3K subcooling

型号 Model	项目 Item (KW)	Tc\Te	-30℃	-25℃	-20℃	-15℃	-10℃	-5℃	0℃	5℃	10℃	15℃	20℃	25℃
WW72KE-TFD-GN1	Q	75℃								18.04	20.68	23.65	26.94	30.55
	P									7.58	7.76	7.9	8	8.06
	Q	70℃						13.78	15.84	18.23	20.95	23.98	27.34	31.01
	P							6.47	6.68	6.87	7.01	7.12	7.2	7.24
	Q	65℃					12.1	13.93	16.08	18.55	21.35	24.46	27.89	31.64
	P						5.66	5.87	6.06	6.21	6.32	6.41	6.46	6.48
	Q	60℃				10.64	12.24	14.17	16.42	18.99	21.88	25.09	28.61	32.43
	P					4.94	5.15	5.33	5.48	5.6	5.69	5.75	5.79	5.79
	Q	55℃			9.37	10.76	12.48	14.52	16.89	19.56	22.56	25.86	29.48	33.4
	P				4.3	4.5	4.67	4.82	4.95	5.04	5.12	5.16	5.18	5.17
	Q	50℃		8.23	9.44	10.96	12.81	14.98	17.46	20.26	23.37	26.79	30.51	34.54
	P			3.75	3.93	4.1	4.25	4.37	4.47	4.54	4.6	4.63	4.64	4.62
	Q	45℃	7.21	8.23	9.58	11.25	13.24	15.54	18.16	21.09	24.32	27.86	31.71	35.85
	P		3.28	3.45	3.61	3.74	3.86	3.96	4.04	4.1	4.14	4.16	4.16	4.14
	Q	40℃	7.11	8.3	9.8	11.63	13.76	16.22	18.98	22.04	25.42	29.09	33.07	37.34
	P		3.04	3.19	3.31	3.42	3.52	3.6	3.66	3.71	3.74	3.75	3.75	3.72
	Q	35℃	7.07	8.42	10.1	12.09	14.39	17	19.91	23.13	26.65	30.47		
	P		2.84	2.96	3.06	3.15	3.22	3.29	3.34	3.37	3.4	3.4		
	Q	30℃	7.08	8.62	10.47	12.64	15.11	17.89	20.97	24.35	28.03			
	P		2.67	2.76	2.84	2.91	2.97	3.02	3.06	3.09	3.11			
	Q	25℃	7.15	8.88	10.92	13.27	15.93	18.89	22.15	25.7				
	P		2.53	2.6	2.66	2.71	2.76	2.8	2.84	2.87				
	Q	20℃	7.27	9.21	11.46	14	16.86	20.01	23.45					
	P		2.42	2.47	2.52	2.56	2.6	2.64	2.67					
WW79KE-TFD-GN1	Q	75℃								19.66	22.52	25.74	29.32	33.25
	P									8.33	8.52	8.67	8.78	8.84
	Q	70℃						15.05	17.27	19.85	22.79	26.09	29.74	33.74
	P							7.11	7.34	7.53	7.69	7.81	7.89	7.93
	Q	65℃					13.22	15.18	17.5	20.18	23.21	26.6	30.33	34.41
	P						6.22	6.45	6.64	6.8	6.92	7.02	7.07	7.1
	Q	60℃				11.64	13.36	15.43	17.87	20.65	23.79	27.27	31.1	35.27
	P					5.43	5.65	5.84	6	6.13	6.22	6.29	6.33	6.34
	Q	55℃			10.25	11.75	13.6	15.81	18.36	21.27	24.52	28.11	32.04	36.32
	P				4.73	4.94	5.12	5.28	5.41	5.51	5.59	5.64	5.66	5.66
	Q	50℃		9.02	10.31	11.96	13.95	16.3	18.99	22.02	25.4	29.11	33.16	37.55
	P			4.13	4.32	4.5	4.65	4.77	4.88	4.96	5.02	5.06	5.07	5.06
	Q	45℃	7.9	9	10.46	12.26	14.41	16.91	19.75	22.92	26.44	30.28	34.46	38.97
	P		3.61	3.79	3.95	4.09	4.22	4.32	4.41	4.47	4.52	4.54	4.55	4.54
	Q	40℃	7.77	9.06	10.69	12.67	14.98	17.64	20.64	23.97	27.63	31.62	35.93	40.57
	P		3.35	3.5	3.63	3.74	3.84	3.92	3.99	4.04	4.08	4.1	4.11	4.1
	Q	35℃	7.71	9.19	11.01	13.17	15.66	18.49	21.66	25.15	28.97	33.11		
	P		3.12	3.24	3.34	3.43	3.51	3.58	3.64	3.68	3.72	3.74		
	Q	30℃	7.72	9.4	11.41	13.77	16.45	19.46	22.81	26.47	30.46			
	P		2.93	3.02	3.1	3.18	3.24	3.3	3.35	3.39	3.42			
	Q	25℃	7.79	9.68	11.91	14.46	17.35	20.56	24.09	27.94				
	P		2.77	2.84	2.91	2.96	3.02	3.07	3.11	3.16				
	Q	20℃	7.93	10.04	12.49	15.26	18.35	21.77	25.5					
	P		2.66	2.71	2.76	2.8	2.85	2.9	2.95					

注：以上数据基于 11.1K 吸气过热度，8.3K 过冷度
Note: The above data are based on 11.1K superheating and 8.3K subcooling

型号 Model	项目 Item (KW)	Tc\Te	-30℃	-25℃	-20℃	-15℃	-10℃	-5℃	0℃	5℃	10℃	15℃	20℃	25℃
WW94KE-TFD-GN1	Q	75℃								23.12	26.48	30.27	34.47	39.1
	P									9.79	10.02	10.19	10.32	10.4
	Q	70℃						17.7	20.31	23.34	26.8	30.67	34.97	39.67
	P							8.36	8.63	8.86	9.04	9.18	9.28	9.33
	Q	65℃					15.55	17.86	20.58	23.73	27.3	31.27	35.67	40.46
	P						7.32	7.58	7.81	8	8.14	8.25	8.32	8.35
	Q	60℃				13.69	15.71	18.15	21.01	24.29	27.97	32.07	36.57	41.47
	P					6.39	6.64	6.87	7.05	7.2	7.32	7.4	7.45	7.46
	Q	55℃			12.05	13.81	15.99	18.59	21.59	25.01	28.83	33.06	37.68	42.7
	P				5.57	5.81	6.02	6.21	6.36	6.48	6.57	6.63	6.66	6.66
	Q	50℃		10.61	12.12	14.06	16.41	19.17	22.33	25.9	29.87	34.24	39	44.15
	P			4.85	5.08	5.29	5.46	5.61	5.74	5.83	5.9	5.95	5.96	5.95
	Q	45℃	9.28	10.58	12.3	14.42	16.95	19.89	23.22	26.96	31.09	35.61	40.52	45.82
	P		4.25	4.46	4.65	4.82	4.96	5.08	5.18	5.26	5.31	5.34	5.35	5.34
	Q	40℃	9.14	10.65	12.57	14.89	17.62	20.75	24.27	28.18	32.49	37.18	42.25	47.71
	P		3.94	4.11	4.26	4.4	4.52	4.61	4.69	4.76	4.8	4.83	4.83	4.82
	Q	35℃	9.07	10.81	12.95	15.48	18.42	21.75	25.47	29.57	34.06	38.94		
	P		3.67	3.81	3.93	4.04	4.13	4.21	4.28	4.33	4.37	4.39		
	Q	30℃	9.08	11.05	13.42	16.19	19.34	22.89	26.82	31.13	35.82			
	P		3.45	3.55	3.65	3.73	3.81	3.88	3.93	3.98	4.02			
	Q	25℃	9.16	11.39	14	17.01	20.4	24.17	28.32	32.85				
	P		3.26	3.34	3.42	3.49	3.55	3.61	3.66	3.71				
	Q	20℃	9.32	11.81	14.68	17.94	21.58	25.59	29.98					
	P		3.12	3.18	3.24	3.3	3.35	3.41	3.46					
WW108KE-TFD-GN1	Q	75℃								26.89	30.8	35.2	40.09	45.47
	P									11.39	11.65	11.85	12	12.09
	Q	70℃						20.59	23.62	27.15	31.17	35.67	40.67	46.14
	P							9.73	10.04	10.3	10.52	10.68	10.79	10.85
	Q	65℃					18.09	20.77	23.94	27.6	31.74	36.37	41.48	47.06
	P						8.51	8.82	9.08	9.3	9.47	9.6	9.67	9.71
	Q	60℃				15.92	18.27	21.11	24.44	28.24	32.53	37.3	42.53	48.23
	P					7.43	7.73	7.98	8.2	8.38	8.51	8.61	8.66	8.67
	Q	55℃			14.02	16.07	18.6	21.62	25.11	29.09	33.53	38.44	43.82	49.66
	P				6.47	6.76	7.01	7.22	7.4	7.54	7.64	7.71	7.75	7.74
	Q	50℃		12.33	14.1	16.35	19.08	22.29	25.97	30.12	34.74	39.82	45.36	51.35
	P			5.65	5.91	6.15	6.35	6.53	6.67	6.78	6.87	6.92	6.93	6.92
	Q	45℃	10.8	12.31	14.3	16.77	19.71	23.13	27.01	31.35	36.15	41.41	47.13	53.29
	P		4.94	5.19	5.41	5.6	5.77	5.91	6.02	6.11	6.18	6.22	6.23	6.21
	Q	40℃	10.63	12.39	14.62	17.32	20.49	24.13	28.22	32.78	37.78	43.24	49.14	55.48
	P		4.58	4.78	4.96	5.12	5.25	5.37	5.46	5.53	5.58	5.61	5.62	5.61
	Q	35℃	10.55	12.57	15.06	18.01	21.42	25.29	29.62	34.39	39.62	45.28		
	P		4.27	4.43	4.57	4.7	4.81	4.9	4.98	5.04	5.08	5.11		
	Q	30℃	10.56	12.85	15.61	18.83	22.5	26.62	31.19	36.2	41.66			
	P		4.01	4.13	4.24	4.34	4.43	4.51	4.58	4.63	4.68			
	Q	25℃	10.66	13.24	16.28	19.78	23.72	28.11	32.94	38.21				
	P		3.79	3.89	3.97	4.05	4.13	4.2	4.26	4.32				
	Q	20℃	10.84	13.73	17.08	20.86	25.1	29.77	34.87					
	P		3.63	3.7	3.77	3.84	3.9	3.97	4.03					

注：以上数据基于 11.1K 吸气过热度，8.3K 过冷度
Note: The above data are based on 11.1K superheating and 8.3K subcooling

制热量 | Heating Capacity R454C

型号 Model	项目 Item (KW)	Tc\Te	-30℃	-25℃	-20℃	-15℃	-10℃	-5℃	0℃	5℃	10℃	15℃	20℃	25℃
WW125KE-TFD-GN1	Q	75℃								30.24	34.64	39.59	45.09	51.14
	P									12.81	13.1	13.33	13.5	13.6
	Q	70℃						23.15	26.56	30.53	35.05	40.12	45.73	51.89
	P							10.94	11.29	11.59	11.83	12.01	12.13	12.2
	Q	65℃					20.34	23.35	26.92	31.04	35.7	40.9	46.65	52.92
	P						9.57	9.92	10.21	10.46	10.65	10.79	10.88	10.92
	Q	60℃				17.9	20.54	23.74	27.48	31.76	36.59	41.94	47.83	54.24
	P					8.35	8.69	8.98	9.22	9.42	9.57	9.68	9.74	9.75
	Q	55℃			15.77	18.07	20.92	24.31	28.24	32.71	37.71	43.23	49.28	55.85
	P				7.28	7.6	7.88	8.12	8.32	8.48	8.6	8.67	8.71	8.71
	Q	50℃		13.87	15.86	18.39	21.46	25.07	29.21	33.87	39.07	44.78	51.01	57.75
	P			6.35	6.65	6.91	7.14	7.34	7.5	7.63	7.72	7.78	7.8	7.79
	Q	45℃	12.14	13.84	16.08	18.86	22.17	26.01	30.37	35.26	40.66	46.57	53	59.93
	P		5.56	5.83	6.08	6.3	6.49	6.65	6.78	6.88	6.95	6.99	7	6.98
	Q	40℃	11.95	13.93	16.44	19.48	23.04	27.13	31.74	36.86	42.49	48.62	55.26	62.4
	P		5.16	5.38	5.58	5.75	5.91	6.03	6.14	6.22	6.28	6.31	6.32	6.31
	Q	35℃	11.86	14.13	16.93	20.25	24.09	28.44	33.31	38.68	44.55	50.92		
	P		4.8	4.98	5.14	5.28	5.4	5.51	5.6	5.66	5.71	5.75		
	Q	30℃	11.87	14.46	17.56	21.17	25.3	29.94	35.08	40.71	46.85			
	P		4.51	4.65	4.77	4.88	4.98	5.07	5.15	5.21	5.26			
	Q	25℃	11.98	14.89	18.31	22.24	26.68	31.61	37.05	42.97				
	P		4.27	4.37	4.47	4.56	4.64	4.72	4.79	4.85				
	Q	20℃	12.19	15.44	19.2	23.46	28.22	33.47	39.22					
	P		4.08	4.16	4.24	4.31	4.39	4.46	4.53					
WW138KE-TFD-GN1	Q	75℃								34.74	39.79	45.47	51.79	58.74
	P									14.71	15.05	15.31	15.5	15.62
	Q	70℃						26.59	30.51	35.07	40.26	46.08	52.53	59.6
	P							12.57	12.97	13.31	13.59	13.79	13.94	14.01
	Q	65℃					23.36	26.82	30.92	35.65	41.01	46.99	53.58	60.79
	P						11	11.39	11.73	12.01	12.23	12.4	12.5	12.54
	Q	60℃				20.56	23.6	27.27	31.57	36.49	42.03	48.18	54.94	62.31
	P					9.6	9.98	10.31	10.59	10.82	11	11.12	11.19	11.2
	Q	55℃			18.11	20.75	24.03	27.92	32.44	37.57	43.31	49.66	56.61	64.16
	P				8.36	8.73	9.05	9.33	9.56	9.74	9.87	9.96	10.01	10
	Q	50℃		15.93	18.21	21.12	24.65	28.79	33.55	38.91	44.87	51.44	58.59	66.33
	P			7.29	7.64	7.94	8.21	8.43	8.62	8.76	8.87	8.93	8.96	8.94
	Q	45℃	13.95	15.9	18.47	21.66	25.46	29.87	34.89	40.5	46.71	53.5	60.88	68.84
	P		6.39	6.7	6.98	7.23	7.45	7.63	7.78	7.9	7.98	8.03	8.04	8.02
	Q	40℃	13.73	16	18.88	22.38	26.47	31.17	36.46	42.34	48.81	55.85	63.48	71.67
	P		5.92	6.18	6.41	6.61	6.78	6.93	7.05	7.15	7.21	7.25	7.26	7.24
	Q	35℃	13.63	16.24	19.45	23.26	27.67	32.67	38.26	44.43	51.18	58.5		
	P		5.52	5.72	5.9	6.07	6.21	6.33	6.43	6.51	6.56	6.6		
	Q	30℃	13.64	16.6	20.17	24.32	29.06	34.39	40.29	46.77	53.82			
	P		5.18	5.34	5.48	5.61	5.72	5.82	5.91	5.98	6.04			
	Q	25℃	13.77	17.11	21.04	25.55	30.65	36.31	42.55	49.36				
	P		4.9	5.02	5.13	5.24	5.33	5.42	5.5	5.57				
	Q	20℃	14	17.74	22.06	26.95	32.42	38.45	45.05					
	P		4.69	4.78	4.87	4.95	5.04	5.12	5.2					

注：以上数据基于 11.1K 吸气过热度，8.3K 过冷度
Note: The above data are based on 11.1K superheating and 8.3K subcooling

Heating Capacity R454C | 制热量

型号 Model	项目 Item (KW)	Tc\Te	-30℃	-25℃	-20℃	-15℃	-10℃	-5℃	0℃	5℃	10℃	15℃	20℃	25℃
WW154KE-TFD-GN1	Q	75℃								38.05	43.58	49.81	56.73	64.35
	P									16.12	16.48	16.77	16.98	17.11
	Q	70℃						29.13	33.42	38.41	44.1	50.48	57.54	65.29
	P							13.77	14.21	14.58	14.88	15.11	15.27	15.35
	Q	65℃					25.59	29.38	33.87	39.05	44.92	51.47	58.69	66.59
	P						12.05	12.48	12.85	13.16	13.4	13.58	13.69	13.74
	Q	60℃				22.52	25.85	29.87	34.58	39.97	46.03	52.77	60.18	68.25
	P					10.51	10.93	11.3	11.6	11.85	12.05	12.18	12.25	12.27
	Q	55℃			19.84	22.73	26.32	30.59	35.54	41.16	47.45	54.4	62.01	70.28
	P				9.16	9.56	9.91	10.22	10.47	10.67	10.82	10.91	10.96	10.96
	Q	50℃		17.45	19.95	23.14	27	31.54	36.75	42.62	49.16	56.34	64.18	72.66
	P			7.99	8.37	8.7	8.99	9.24	9.44	9.6	9.71	9.79	9.81	9.8
	Q	45℃	15.28	17.42	20.23	23.73	27.89	32.72	38.22	44.36	51.16	58.6	66.69	75.41
	P		6.99	7.34	7.65	7.92	8.16	8.36	8.53	8.65	8.74	8.79	8.81	8.79
	Q	40℃	15.04	17.53	20.69	24.51	29	34.14	39.94	46.38	53.46	61.18	69.53	78.51
	P		6.49	6.77	7.02	7.24	7.43	7.59	7.73	7.83	7.9	7.94	7.95	7.94
	Q	35℃	14.93	17.78	21.3	25.48	30.31	35.79	41.91	48.67	56.06	64.08		
	P		6.05	6.27	6.47	6.65	6.8	6.93	7.04	7.13	7.19	7.23		
	Q	30℃	14.94	18.19	22.09	26.64	31.83	37.67	44.13	51.23	58.95			
	P		5.67	5.85	6	6.14	6.27	6.38	6.47	6.55	6.62			
	Q	25℃	15.08	18.74	23.04	27.99	33.57	39.78	46.61	54.07				
	P		5.37	5.5	5.62	5.74	5.84	5.94	6.03	6.11				
	Q	20℃	15.34	19.43	24.16	29.52	35.51	42.12	49.34					
	P		5.14	5.24	5.33	5.43	5.52	5.61	5.7					
WW170KE-TFD-GN1	Q	75℃								45.32	51.9	59.32	67.57	76.63
	P									19.19	19.63	19.97	20.22	20.38
	Q	70℃						34.69	39.8	45.75	52.52	60.12	68.53	77.75
	P							16.39	16.92	17.36	17.72	17.99	18.18	18.28
	Q	65℃					30.48	34.99	40.34	46.51	53.5	61.29	69.9	79.3
	P						14.35	14.86	15.31	15.67	15.96	16.17	16.3	16.36
	Q	60℃				26.82	30.78	35.57	41.18	47.6	54.82	62.85	71.67	81.28
	P					12.52	13.02	13.45	13.82	14.12	14.35	14.5	14.59	14.61
	Q	55℃			23.63	27.07	31.34	36.43	42.32	49.01	56.5	64.79	73.85	83.69
	P				10.91	11.39	11.81	12.17	12.46	12.7	12.88	13	13.05	13.05
	Q	50℃		20.78	23.76	27.55	32.16	37.56	43.76	50.76	58.54	67.1	76.43	86.53
	P			9.51	9.96	10.36	10.71	11	11.24	11.43	11.57	11.65	11.69	11.67
	Q	45℃	18.2	20.74	24.1	28.26	33.22	38.97	45.51	52.83	60.93	69.79	79.42	89.8
	P		8.33	8.74	9.11	9.44	9.72	9.96	10.15	10.3	10.41	10.47	10.49	10.47
	Q	40℃	17.91	20.87	24.63	29.19	34.53	40.66	47.56	55.23	63.67	72.86	82.81	93.5
	P		7.73	8.06	8.36	8.62	8.85	9.04	9.2	9.32	9.41	9.46	9.47	9.45
	Q	35℃	17.78	21.18	25.37	30.35	36.1	42.62	49.91	57.96	66.76	76.31		
	P		7.2	7.46	7.7	7.91	8.1	8.26	8.39	8.49	8.56	8.61		
	Q	30℃	17.79	21.66	26.31	31.73	37.91	44.86	52.56	61.01	70.2			
	P		6.76	6.96	7.15	7.32	7.47	7.6	7.71	7.8	7.88			
	Q	25℃	17.96	22.32	27.44	33.33	39.98	47.37	55.51	64.39				
	P		6.39	6.55	6.7	6.83	6.96	7.07	7.18	7.27				
	Q	20℃	18.27	23.14	28.78	35.16	42.29	50.16	58.76					
	P		6.12	6.24	6.35	6.46	6.57	6.68	6.79					

注：以上数据基于 11.1K 吸气过热度，8.3K 过冷度
Note: The above data are based on 11.1K superheating and 8.3K subcooling

制热量 Heating Capacity R454C

型号 Model	项目 Item (KW)	Tc\Te	-30℃	-25℃	-20℃	-15℃	-10℃	-5℃	0℃	5℃	10℃	15℃	20℃	25℃
WW250KE-TWD-GN1	Q	75℃								59.17	67.77	77.46	88.22	100.06
	P									25.06	25.63	26.08	26.41	26.61
	Q	70℃						45.3	51.97	59.74	68.58	78.5	89.48	101.52
	P							21.41	22.1	22.67	23.14	23.5	23.74	23.87
	Q	65℃					39.8	45.69	52.67	60.73	69.85	80.03	91.27	103.55
	P						18.73	19.41	19.99	20.46	20.84	21.11	21.29	21.36
	Q	60℃				35.02	40.2	46.45	53.77	62.15	71.59	82.07	93.58	106.13
	P					16.35	17	17.57	18.05	18.43	18.73	18.94	19.06	19.08
	Q	55℃			30.85	35.35	40.93	47.57	55.26	64	73.78	84.59	96.43	109.28
	P				14.24	14.87	15.42	15.89	16.28	16.59	16.82	16.97	17.05	17.04
	Q	50℃		27.14	31.03	35.98	41.99	49.05	57.15	66.28	76.44	87.61	99.8	112.99
	P			12.42	13.01	13.53	13.98	14.36	14.68	14.93	15.11	15.22	15.26	15.23
	Q	45℃	23.76	27.08	31.47	36.9	43.38	50.89	59.43	68.99	79.56	91.13	103.7	117.26
	P		10.88	11.42	11.9	12.32	12.69	13	13.26	13.45	13.59	13.68	13.7	13.67
	Q	40℃	23.39	27.26	32.17	38.11	45.09	53.09	62.1	72.12	83.13	95.14	108.13	122.09
	P		10.09	10.52	10.91	11.26	11.55	11.81	12.01	12.17	12.28	12.35	12.37	12.34
	Q	35℃	23.21	27.66	33.13	39.62	47.13	55.65	65.17	75.68	87.17	99.64		
	P		9.4	9.75	10.06	10.33	10.57	10.78	10.95	11.08	11.18	11.24		
	Q	30℃	23.23	28.28	34.35	41.43	49.5	58.57	68.63	79.66	91.67			
	P		8.82	9.09	9.33	9.55	9.75	9.92	10.07	10.19	10.29			
	Q	25℃	23.45	29.14	35.83	43.52	52.2	61.86	72.48	84.08				
	P		8.35	8.55	8.74	8.92	9.09	9.24	9.37	9.5				
	Q	20℃	23.85	30.22	37.57	45.91	55.22	65.5	76.73					
	P		7.99	8.14	8.29	8.44	8.58	8.73	8.87					
WW300KE-TWD-GN1	Q	75℃								72.83	83.41	95.33	108.58	123.15
	P									30.85	31.55	32.1	32.5	32.75
	Q	70℃						55.75	63.97	73.52	84.41	96.61	110.13	124.95
	P							26.35	27.19	27.91	28.48	28.92	29.22	29.38
	Q	65℃					48.98	56.24	64.83	74.74	85.97	98.5	112.33	127.44
	P						23.05	23.89	24.6	25.19	25.65	25.99	26.2	26.29
	Q	60℃				43.11	49.47	57.17	66.18	76.49	88.1	101	115.18	130.63
	P					20.12	20.93	21.62	22.21	22.69	23.05	23.31	23.45	23.49
	Q	55℃			37.97	43.51	50.37	58.54	68.01	78.77	90.81	104.11	118.68	134.5
	P				17.53	18.3	18.97	19.55	20.03	20.41	20.7	20.89	20.98	20.97
	Q	50℃		33.4	38.19	44.28	51.68	60.36	70.33	81.57	94.08	107.83	122.83	139.06
	P			15.29	16.01	16.65	17.2	17.68	18.07	18.37	18.59	18.73	18.78	18.75
	Q	45℃	29.24	33.33	38.73	45.41	53.38	62.63	73.14	84.9	97.91	112.16	127.63	144.32
	P		13.39	14.05	14.64	15.17	15.62	16	16.32	16.56	16.73	16.83	16.86	16.82
	Q	40℃	28.79	33.55	39.59	46.91	55.5	65.34	76.43	88.76	102.32	117.09	133.08	150.26
	P		12.42	12.95	13.43	13.85	14.22	14.53	14.78	14.98	15.12	15.2	15.22	15.19
	Q	35℃	28.57	34.04	40.77	48.77	58.01	68.49	80.21	93.14	107.29	122.63		
	P		11.57	12	12.38	12.72	13.01	13.27	13.48	13.64	13.76	13.84		
	Q	30℃	28.6	34.81	42.28	50.99	60.93	72.09	84.47	98.05	112.82			
	P		10.86	11.19	11.49	11.76	12	12.21	12.39	12.54	12.66			
	Q	25℃	28.86	35.86	44.1	53.57	64.25	76.13	89.21	103.48				
	P		10.28	10.53	10.76	10.98	11.18	11.37	11.54	11.69				
	Q	20℃	29.36	37.19	46.25	56.51	67.96	80.61	94.44					
	P		9.83	10.02	10.21	10.39	10.57	10.74	10.91					

注：以上数据基于 11.1K 吸气过热度，8.3K 过冷度
Note: The above data are based on 11.1K superheating and 8.3K subcooling

Heating Capacity R455A 制热量

型号 Model	项目 Item (KW)	Tc\Te	-30℃	-25℃	-20℃	-15℃	-10℃	-5℃	0℃	5℃	10℃	15℃	20℃	25℃
WW28KE-TFD-GN1	Q	72℃								7.02	8.09	9.29	10.62	12.08
	P									2.58	2.6	2.61	2.62	2.63
	Q	70℃								7.08	8.17	9.4	10.76	12.26
	P									2.5	2.52	2.54	2.55	2.55
	Q	65℃						5.35	6.24	7.26	8.42	9.72	11.16	12.75
	P							2.24	2.27	2.31	2.34	2.36	2.38	2.38
	Q	60℃					4.67	5.47	6.42	7.5	8.73	10.11	11.63	13.3
	P						1.99	2.04	2.09	2.13	2.17	2.19	2.21	2.22
	Q	55℃				4.06	4.78	5.64	6.64	7.8	9.1	10.55	12.16	13.91
	P					1.74	1.81	1.87	1.93	1.97	2.01	2.04	2.06	2.07
	Q	50℃			3.55	4.17	4.93	5.85	6.92	8.14	9.52	11.05	12.74	14.59
	P				1.49	1.57	1.65	1.72	1.78	1.83	1.86	1.89	1.91	1.92
	Q	45℃		3.14	3.65	4.31	5.13	6.11	7.24	8.53	9.99	11.6	13.38	15.33
	P			1.24	1.34	1.42	1.51	1.58	1.64	1.69	1.73	1.76	1.77	1.78
	Q	40℃	2.82	3.22	3.77	4.49	5.37	6.4	7.61	8.98	10.51	12.21	14.08	16.12
	P		0.98	1.1	1.2	1.3	1.38	1.46	1.52	1.57	1.61	1.63	1.64	1.64
	Q	35℃	2.89	3.33	3.93	4.7	5.64	6.74	8.02	9.46	11.08	12.87		
	P		0.86	0.98	1.09	1.19	1.27	1.35	1.41	1.46	1.5	1.52		
	Q	30℃	2.98	3.47	4.12	4.95	5.95	7.12	8.47	9.99	11.7			
	P		0.76	0.88	1	1.1	1.18	1.26	1.32	1.36	1.39			
	Q	25℃	3.1	3.63	4.34	5.23	6.29	7.53	8.96	10.57				
	P		0.68	0.81	0.92	1.02	1.11	1.18	1.24	1.28				
	Q	20℃	3.24	3.82	4.59	5.53	6.66	7.98	9.49					
	P		0.62	0.75	0.87	0.96	1.05	1.11	1.16					
WW34KE-TFD-GN1	Q	72℃								9.55	11	12.63	14.45	16.44
	P									3.51	3.54	3.56	3.57	3.57
	Q	70℃								9.63	11.12	12.79	14.64	16.68
	P									3.4	3.43	3.45	3.47	3.47
	Q	65℃						7.28	8.49	9.88	11.46	13.23	15.19	17.34
	P							3.04	3.09	3.14	3.18	3.21	3.23	3.24
	Q	60℃					6.35	7.44	8.73	10.21	11.88	13.75	15.82	18.09
	P						2.71	2.78	2.85	2.9	2.95	2.98	3.01	3.02
	Q	55℃				5.53	6.5	7.67	9.04	10.6	12.38	14.35	16.53	18.92
	P					2.37	2.46	2.55	2.62	2.68	2.73	2.77	2.8	2.81
	Q	50℃			4.83	5.67	6.71	7.96	9.41	11.07	12.95	15.03	17.33	19.85
	P				2.03	2.14	2.24	2.33	2.41	2.48	2.54	2.58	2.6	2.61
	Q	45℃		4.26	4.96	5.86	6.98	8.31	9.85	11.61	13.59	15.78	18.21	20.85
	P			1.68	1.82	1.94	2.05	2.15	2.23	2.3	2.36	2.39	2.41	2.42
	Q	40℃	3.84	4.38	5.13	6.11	7.3	8.71	10.35	12.21	14.3	16.61	19.16	21.93
	P		1.34	1.49	1.63	1.76	1.88	1.98	2.07	2.14	2.19	2.22	2.24	2.23
	Q	35℃	3.93	4.53	5.35	6.4	7.67	9.17	10.91	12.87	15.07	17.51		
	P		1.17	1.33	1.48	1.62	1.73	1.84	1.92	1.99	2.04	2.06		
	Q	30℃	4.06	4.72	5.61	6.73	8.09	9.68	11.52	13.59	15.91			
	P		1.03	1.2	1.35	1.49	1.61	1.71	1.79	1.85	1.89			
	Q	25℃	4.22	4.94	5.9	7.11	8.56	10.25	12.19	14.37				
	P		0.93	1.1	1.25	1.39	1.51	1.61	1.68	1.73				
	Q	20℃	4.4	5.2	6.24	7.53	9.07	10.86	12.9					
	P		0.85	1.02	1.18	1.31	1.43	1.52	1.58					

注：以上数据基于 11.1K 吸气过热度，8.3K 过冷度
Note: The above data are based on 11.1K superheating and 8.3K subcooling

制热量 Heating Capacity R455A

型号 Model	项目 Item (KW)	Tc\Te	-30℃	-25℃	-20℃	-15℃	-10℃	-5℃	0℃	5℃	10℃	15℃	20℃	25℃
WW48KE-TFD-GN1	Q	72℃								12.76	14.86	17.21	19.84	22.71
	P									4.9	5.03	5.15	5.25	5.34
	Q	70℃								12.84	14.96	17.34	19.99	22.9
	P									4.72	4.84	4.94	5.04	5.12
	Q	65℃						9.53	11.17	13.09	15.28	17.74	20.46	23.44
	P							4.03	4.16	4.27	4.38	4.47	4.55	4.61
	Q	60℃					8.3	9.73	11.44	13.44	15.7	18.24	21.04	24.1
	P						3.54	3.66	3.77	3.87	3.95	4.03	4.09	4.14
	Q	55℃				7.29	8.51	10.01	11.8	13.88	16.23	18.85	21.73	24.88
	P					3.09	3.21	3.31	3.41	3.5	3.57	3.63	3.68	3.72
	Q	50℃			6.49	7.49	8.79	10.38	12.25	14.41	16.85	19.56	22.54	25.77
	P				2.7	2.81	2.91	3	3.09	3.16	3.22	3.28	3.31	3.34
	Q	45℃		5.89	6.67	7.76	9.15	10.83	12.8	15.05	17.58	20.38	23.45	26.78
	P			2.34	2.45	2.55	2.64	2.73	2.8	2.86	2.92	2.96	2.98	2.99
	Q	40℃	5.49	6.05	6.93	8.11	9.59	11.36	13.43	15.77	18.4	21.3	24.47	27.91
	P		2.03	2.14	2.24	2.33	2.41	2.48	2.55	2.6	2.65	2.68	2.69	2.69
	Q	35℃	5.62	6.28	7.25	8.53	10.11	11.98	14.15	16.6	19.33	22.34		
	P		1.86	1.96	2.05	2.13	2.21	2.28	2.33	2.38	2.41	2.43		
	Q	30℃	5.81	6.58	7.65	9.03	10.71	12.69	14.96	17.52	20.36			
	P		1.71	1.8	1.89	1.97	2.04	2.1	2.15	2.19	2.21			
	Q	25℃	6.07	6.93	8.12	9.6	11.4	13.49	15.87	18.54				
	P		1.59	1.68	1.76	1.83	1.9	1.95	2	2.03				
	Q	20℃	6.38	7.36	8.65	10.25	12.16	14.37	16.86					
	P		1.49	1.58	1.66	1.73	1.79	1.84	1.88					
WW61KE-TFD-GN1	Q	72℃								16.64	19.17	21.98	25.07	28.45
	P									6.27	6.41	6.53	6.62	6.68
	Q	70℃								16.73	19.29	22.14	25.27	28.68
	P									6.03	6.16	6.26	6.35	6.41
	Q	65℃						12.6	14.66	17.01	19.66	22.6	25.84	29.35
	P							5.16	5.31	5.44	5.55	5.64	5.71	5.76
	Q	60℃					10.99	12.82	14.95	17.39	20.13	23.17	26.51	30.15
	P						4.51	4.66	4.79	4.9	5	5.07	5.13	5.17
	Q	55℃				9.61	11.2	13.11	15.33	17.86	20.7	23.85	27.3	31.06
	P					3.95	4.09	4.21	4.32	4.41	4.49	4.56	4.61	4.64
	Q	50℃			8.47	9.82	11.49	13.48	15.79	18.42	21.37	24.64	28.22	32.1
	P				3.45	3.58	3.7	3.8	3.9	3.97	4.04	4.1	4.14	4.17
	Q	45℃		7.59	8.68	10.1	11.85	13.93	16.35	19.09	22.15	25.54	29.25	33.28
	P			3.03	3.15	3.26	3.35	3.44	3.52	3.58	3.64	3.69	3.72	3.75
	Q	40℃	6.96	7.78	8.94	10.45	12.29	14.48	17	19.86	23.05	26.56	30.41	34.59
	P		2.69	2.79	2.89	2.97	3.05	3.12	3.18	3.24	3.29	3.33	3.37	3.4
	Q	35℃	7.13	8.03	9.28	10.88	12.82	15.12	17.75	20.73	24.05	27.71		
	P		2.51	2.58	2.66	2.72	2.79	2.84	2.89	2.94	2.99	3.03		
	Q	30℃	7.36	8.35	9.69	11.39	13.44	15.85	18.61	21.72	25.18			
	P		2.35	2.41	2.46	2.51	2.56	2.61	2.65	2.69	2.73			
	Q	25℃	7.66	8.73	10.17	11.98	14.15	16.68	19.58	22.83				
	P		2.23	2.27	2.31	2.34	2.38	2.42	2.45	2.49				
	Q	20℃	8.01	9.19	10.74	12.66	14.96	17.62	20.65					
	P		2.14	2.16	2.18	2.21	2.23	2.26	2.3					

注：以上数据基于 11.1K 吸气过热度，8.3K 过冷度
Note: The above data are based on 11.1K superheating and 8.3K subcooling

Heating Capacity R455A 制热量

型号 Model	项目 Item (KW)	Tc\Te	-30℃	-25℃	-20℃	-15℃	-10℃	-5℃	0℃	5℃	10℃	15℃	20℃	25℃
WW72KE-TFD-GN1	Q	72℃								19.22	22.06	25.25	28.79	32.68
	P									7.43	7.59	7.72	7.81	7.86
	Q	70℃								19.32	22.19	25.41	28.98	32.89
	P									7.14	7.29	7.41	7.49	7.53
	Q	65℃						14.76	17.04	19.65	22.61	25.92	29.57	33.56
	P							6.11	6.3	6.45	6.58	6.67	6.72	6.74
	Q	60℃					12.99	15.02	17.4	20.12	23.18	26.58	30.32	34.4
	P						5.35	5.54	5.69	5.82	5.92	5.99	6.02	6.03
	Q	55℃				11.42	13.23	15.39	17.89	20.72	23.89	27.4	31.24	35.42
	P					4.68	4.86	5.02	5.14	5.25	5.32	5.37	5.39	5.38
	Q	50℃			10.01	11.63	13.58	15.87	18.5	21.45	24.75	28.37	32.33	36.62
	P				4.09	4.27	4.41	4.54	4.65	4.73	4.78	4.82	4.83	4.81
	Q	45℃		8.73	10.16	11.93	14.03	16.47	19.23	22.33	25.75	29.51	33.59	38.01
	P			3.59	3.75	3.89	4.01	4.12	4.2	4.26	4.31	4.33	4.33	4.31
	Q	40℃	7.52	8.79	10.39	12.33	14.59	17.18	20.09	23.34	26.91	30.81	35.03	39.57
	P		3.17	3.31	3.45	3.56	3.66	3.74	3.81	3.86	3.89	3.9	3.9	3.87
	Q	35℃	7.48	8.93	10.71	12.81	15.25	18	21.08	24.49	28.22	32.27		
	P		2.96	3.07	3.18	3.27	3.35	3.42	3.47	3.51	3.53	3.54		
	Q	30℃	7.49	9.14	11.11	13.4	16.01	18.95	22.21	25.78	29.68			
	P		2.78	2.87	2.95	3.03	3.09	3.14	3.18	3.21	3.23			
	Q	25℃	7.57	9.42	11.59	14.08	16.89	20.02	23.46	27.22				
	P		2.63	2.7	2.77	2.82	2.87	2.92	2.95	2.98				
	Q	20℃	7.72	9.78	12.16	14.86	17.88	21.2	24.84					
	P		2.52	2.57	2.62	2.66	2.71	2.74	2.78					
WW79KE-TFD-GN1	Q	72℃								20.98	24.06	27.51	31.33	35.54
	P									8.16	8.33	8.47	8.56	8.61
	Q	70℃								21.06	24.17	27.65	31.51	35.75
	P									7.84	8	8.12	8.2	8.24
	Q	65℃						16.09	18.56	21.39	24.59	28.15	32.1	36.41
	P							6.71	6.91	7.07	7.2	7.3	7.36	7.38
	Q	60℃					14.15	16.36	18.94	21.87	25.17	28.84	32.88	37.3
	P						5.87	6.07	6.23	6.37	6.48	6.55	6.59	6.6
	Q	55℃				12.44	14.42	16.76	19.45	22.51	25.93	29.71	33.87	38.39
	P					5.14	5.32	5.49	5.62	5.73	5.82	5.87	5.9	5.9
	Q	50℃			10.91	12.69	14.81	17.28	20.11	23.3	26.85	30.77	35.05	39.7
	P				4.49	4.67	4.83	4.96	5.07	5.16	5.23	5.27	5.29	5.28
	Q	45℃		9.51	11.1	13.03	15.3	17.93	20.91	24.25	27.94	32	36.43	41.22
	P			3.95	4.11	4.25	4.38	4.49	4.58	4.66	4.71	4.74	4.75	4.74
	Q	40℃	8.18	9.6	11.36	13.46	15.91	18.7	21.85	25.35	29.2	33.42	38.01	42.95
	P		3.49	3.64	3.77	3.89	3.99	4.08	4.15	4.21	4.26	4.28	4.29	4.28
	Q	35℃	8.15	9.75	11.7	13.99	16.62	19.59	22.92	26.6	30.63	35.02		
	P		3.26	3.37	3.47	3.57	3.65	3.72	3.79	3.84	3.88	3.9		
	Q	30℃	8.16	9.97	12.12	14.6	17.43	20.6	24.12	27.99	32.22			
	P		3.06	3.14	3.22	3.3	3.37	3.43	3.48	3.53	3.56			
	Q	25℃	8.21	10.25	12.61	15.31	18.35	21.74	25.46	29.54				
	P		2.89	2.96	3.02	3.08	3.13	3.19	3.24	3.28				
	Q	20℃	8.32	10.58	13.18	16.11	19.38	22.98	26.94					
	P		2.77	2.81	2.86	2.91	2.96	3	3.05					

注：以上数据基于 11.1K 吸气过热度，8.3K 过冷度
Note: The above data are based on 11.1K superheating and 8.3K subcooling

制热量 Heating Capacity R455A

型号 Model	项目 Item (KW)	Tc\Te	-30℃	-25℃	-20℃	-15℃	-10℃	-5℃	0℃	5℃	10℃	15℃	20℃	25℃
WW94KE-TFD-GN1	Q	72℃								24.67	28.29	32.35	36.85	41.79
	P									9.6	9.8	9.96	10.07	10.13
	Q	70℃								24.77	28.42	32.52	37.05	42.04
	P									9.22	9.4	9.55	9.64	9.69
	Q	65℃						18.93	21.82	25.15	28.91	33.11	37.74	42.82
	P							7.89	8.12	8.32	8.47	8.58	8.65	8.68
	Q	60℃					16.64	19.24	22.27	25.72	29.6	33.91	38.67	43.86
	P						6.91	7.14	7.33	7.49	7.62	7.7	7.75	7.76
	Q	55℃				14.63	16.96	19.71	22.88	26.47	30.49	34.94	39.82	45.15
	P					6.04	6.26	6.45	6.61	6.74	6.84	6.91	6.94	6.94
	Q	50℃			12.83	14.92	17.41	20.32	23.65	27.4	31.58	36.18	41.22	46.69
	P				5.28	5.49	5.68	5.83	5.97	6.07	6.15	6.2	6.22	6.21
	Q	45℃		11.19	13.05	15.32	18	21.08	24.59	28.51	32.86	37.63	42.84	48.48
	P			4.64	4.83	5	5.15	5.28	5.39	5.47	5.54	5.57	5.59	5.58
	Q	40℃	9.62	11.29	13.36	15.83	18.7	21.99	25.69	29.81	34.34	39.3	44.69	50.51
	P		4.11	4.28	4.43	4.57	4.69	4.8	4.89	4.96	5.01	5.04	5.05	5.04
	Q	35℃	9.58	11.47	13.76	16.45	19.54	23.04	26.95	31.27	36.02	41.18		
	P		3.83	3.96	4.08	4.19	4.29	4.38	4.45	4.51	4.56	4.59		
	Q	30℃	9.59	11.72	14.25	17.17	20.5	24.23	28.37	32.92	37.89			
	P		3.59	3.7	3.79	3.88	3.96	4.03	4.09	4.15	4.19			
	Q	25℃	9.66	12.05	14.83	18.01	21.58	25.56	29.94	34.74				
	P		3.4	3.48	3.55	3.62	3.69	3.75	3.81	3.86				
	Q	20℃	9.78	12.44	15.5	18.94	22.78	27.03	31.67					
	P		3.25	3.31	3.36	3.42	3.48	3.53	3.59					
WW108KE-TFD-GN1	Q	72℃								28.69	32.9	37.62	42.85	48.61
	P									11.16	11.4	11.58	11.71	11.78
	Q	70℃								28.81	33.06	37.82	43.09	48.89
	P									10.72	10.94	11.1	11.22	11.27
	Q	65℃						22.01	25.38	29.25	33.62	38.5	43.89	49.8
	P							9.17	9.45	9.67	9.85	9.98	10.06	10.1
	Q	60℃					19.35	22.38	25.9	29.91	34.42	39.44	44.97	51.01
	P						8.03	8.3	8.53	8.71	8.86	8.96	9.01	9.03
	Q	55℃				17.02	19.73	22.92	26.61	30.78	35.46	40.63	46.32	52.51
	P					7.02	7.28	7.5	7.69	7.84	7.96	8.03	8.07	8.07
	Q	50℃			14.93	17.35	20.25	23.64	27.51	31.87	36.72	42.08	47.93	54.3
	P				6.15	6.39	6.6	6.78	6.94	7.06	7.15	7.21	7.23	7.22
	Q	45℃		13.01	15.18	17.81	20.93	24.52	28.6	33.16	38.22	43.77	49.82	56.38
	P			5.4	5.62	5.82	5.99	6.14	6.27	6.37	6.44	6.48	6.5	6.48
	Q	40℃	11.19	13.13	15.54	18.41	21.75	25.57	29.88	34.66	39.94	45.71	51.98	58.74
	P		4.78	4.97	5.15	5.31	5.46	5.58	5.68	5.76	5.82	5.86	5.87	5.86
	Q	35℃	11.14	13.34	16	19.13	22.72	26.79	31.34	36.37	41.89	47.9		
	P		4.45	4.61	4.75	4.88	4.99	5.09	5.18	5.25	5.3	5.33		
	Q	30℃	11.16	13.63	16.57	19.97	23.84	28.18	32.99	38.28	44.06			
	P		4.18	4.3	4.41	4.51	4.6	4.69	4.76	4.82	4.87			
	Q	25℃	11.23	14.01	17.25	20.94	25.1	29.72	34.82	40.4				
	P		3.96	4.04	4.13	4.21	4.29	4.36	4.43	4.49				
	Q	20℃	11.37	14.47	18.02	22.03	26.5	31.43	36.84					
	P		3.79	3.85	3.91	3.97	4.04	4.11	4.18					

注：以上数据基于 11. 1K 吸气过热度，8. 3K 过冷度
Note: The above data are based on 11.1K superheating and 8.3K subcooling

Heating Capacity R455A 制热量

型号 Model	项目 Item (KW)	Tc\Te	-30℃	-25℃	-20℃	-15℃	-10℃	-5℃	0℃	5℃	10℃	15℃	20℃	25℃
WW125KE-TFD-GN1	Q	72℃								32.26	37	42.3	48.19	54.66
	P									12.55	12.82	13.02	13.17	13.24
	Q	70℃								32.39	37.18	42.53	48.46	54.98
	P									12.05	12.3	12.49	12.61	12.68
	Q	65℃						24.75	28.54	32.89	37.81	43.3	49.36	56
	P							10.32	10.62	10.88	11.08	11.22	11.32	11.35
	Q	60℃					21.76	25.17	29.12	33.64	38.71	44.36	50.57	57.36
	P						9.03	9.33	9.59	9.8	9.96	10.07	10.14	10.15
	Q	55℃				19.14	22.18	25.78	29.92	34.62	39.87	45.7	52.09	59.05
	P					7.9	8.19	8.44	8.65	8.82	8.95	9.03	9.08	9.07
	Q	50℃			16.79	19.51	22.78	26.58	30.93	35.84	41.3	47.32	53.91	61.06
	P				6.91	7.18	7.42	7.63	7.8	7.94	8.04	8.11	8.13	8.12
	Q	45℃		14.63	17.07	20.03	23.54	27.58	32.16	37.29	42.98	49.22	56.03	63.4
	P			6.07	6.32	6.54	6.74	6.91	7.05	7.16	7.24	7.29	7.31	7.29
	Q	40℃	12.59	14.77	17.47	20.7	24.46	28.76	33.6	38.98	44.92	51.4	58.45	66.06
	P		5.37	5.59	5.8	5.98	6.14	6.27	6.39	6.48	6.55	6.59	6.6	6.59
	Q	35℃	12.53	15	17.99	21.51	25.55	30.13	35.25	40.9	47.11	53.86		
	P		5.01	5.18	5.34	5.49	5.62	5.73	5.82	5.9	5.96	6		
	Q	30℃	12.55	15.33	18.64	22.46	26.81	31.69	37.1	43.05	49.55			
	P		4.7	4.83	4.96	5.07	5.18	5.27	5.35	5.42	5.48			
	Q	25℃	12.63	15.76	19.39	23.55	28.22	33.43	39.16	45.43				
	P		4.45	4.55	4.64	4.73	4.82	4.9	4.98	5.05				
	Q	20℃	12.79	16.27	20.27	24.77	29.8	35.35	41.43					
	P		4.26	4.32	4.4	4.47	4.55	4.62	4.7					
WW138KE-TFD-GN1	Q	72℃								37.06	42.5	48.59	55.36	62.79
	P									14.42	14.72	14.96	15.12	15.21
	Q	70℃								37.21	42.7	48.86	55.67	63.15
	P									13.85	14.13	14.34	14.49	14.56
	Q	65℃						28.43	32.79	37.79	43.44	49.74	56.7	64.33
	P							11.85	12.2	12.49	12.72	12.89	13	13.04
	Q	60℃					25	28.91	33.45	38.64	44.47	50.95	58.09	65.89
	P						10.38	10.72	11.01	11.26	11.44	11.57	11.64	11.66
	Q	55℃				21.98	25.48	29.61	34.37	39.77	45.8	52.49	59.83	67.83
	P					9.07	9.41	9.69	9.94	10.13	10.28	10.38	10.43	10.42
	Q	50℃			19.28	22.41	26.16	30.53	35.53	41.17	47.44	54.36	61.92	70.14
	P				7.94	8.25	8.53	8.76	8.96	9.12	9.24	9.31	9.34	9.33
	Q	45℃		16.81	19.61	23.01	27.04	31.68	36.94	42.84	49.37	56.54	64.36	72.83
	P			6.97	7.26	7.51	7.74	7.94	8.1	8.23	8.32	8.38	8.39	8.38
	Q	40℃	14.46	16.96	20.07	23.78	28.1	33.04	38.59	44.78	51.59	59.05	67.14	75.89
	P		6.17	6.43	6.66	6.86	7.05	7.21	7.34	7.45	7.52	7.57	7.58	7.57
	Q	35℃	14.39	17.23	20.67	24.71	29.35	34.61	40.49	46.99	54.11	61.87		
	P		5.75	5.95	6.14	6.3	6.45	6.58	6.69	6.78	6.85	6.89		
	Q	30℃	14.41	17.61	21.41	25.8	30.8	36.4	42.62	49.46	56.92			
	P		5.4	5.55	5.69	5.83	5.95	6.05	6.15	6.23	6.3			
	Q	25℃	14.51	18.1	22.28	27.05	32.42	38.4	44.99	52.19				
	P		5.11	5.22	5.33	5.44	5.54	5.63	5.72	5.8				
	Q	20℃	14.69	18.69	23.28	28.46	34.23	40.61	47.59					
	P		4.89	4.97	5.05	5.13	5.22	5.31	5.4					

注：以上数据基于 11. 1K 吸气过热度，8. 3K 过冷度
Note: The above data are based on 11.1K superheating and 8.3K subcooling

制热量 Heating Capacity R455A

型号 Model	项目 Item (KW)	Tc\Te	-30℃	-25℃	-20℃	-15℃	-10℃	-5℃	0℃	5℃	10℃	15℃	20℃	25℃
WW154KE-TFD-GN1	Q	72℃								40.6	46.55	53.23	60.64	68.78
	P									15.79	16.13	16.39	16.57	16.66
	Q	70℃								40.76	46.78	53.52	60.98	69.18
	P									15.17	15.48	15.71	15.87	15.95
	Q	65℃						31.14	35.91	41.39	47.58	54.48	62.11	70.47
	P							12.98	13.37	13.68	13.94	14.12	14.24	14.29
	Q	60℃					27.39	31.67	36.64	42.32	48.71	55.81	63.63	72.18
	P						11.37	11.74	12.07	12.33	12.53	12.67	12.76	12.77
	Q	55℃				24.08	27.91	32.44	37.65	43.56	50.17	57.5	65.54	74.3
	P					9.94	10.3	10.62	10.88	11.1	11.26	11.37	11.42	11.42
	Q	50℃			21.12	24.55	28.66	33.45	38.92	45.09	51.96	59.54	67.83	76.83
	P				8.7	9.04	9.34	9.6	9.82	9.99	10.12	10.2	10.23	10.22
	Q	45℃		18.41	21.48	25.21	29.61	34.7	40.47	46.92	54.08	61.93	70.5	79.78
	P			7.64	7.95	8.23	8.48	8.69	8.87	9.01	9.11	9.17	9.2	9.17
	Q	40℃	15.84	18.58	21.98	26.05	30.78	36.19	42.28	49.05	56.52	64.68	73.55	83.13
	P		6.76	7.04	7.29	7.52	7.72	7.89	8.04	8.16	8.24	8.29	8.31	8.29
	Q	35℃	15.76	18.88	22.64	27.07	32.15	37.91	44.35	51.47	59.27	67.77		
	P		6.3	6.52	6.72	6.9	7.07	7.21	7.33	7.43	7.5	7.55		
	Q	30℃	15.79	19.29	23.45	28.26	33.73	39.87	46.68	54.17	62.35			
	P		5.92	6.08	6.24	6.38	6.51	6.63	6.74	6.83	6.9			
	Q	25℃	15.9	19.83	24.4	29.63	35.51	42.06	49.28	57.17				
	P		5.6	5.72	5.84	5.95	6.06	6.17	6.26	6.35				
	Q	20℃	16.1	20.48	25.5	31.17	37.5	44.48	52.13					
	P		5.36	5.44	5.53	5.62	5.72	5.82	5.91					
WW170KE-TFD-GN1	Q	72℃								48.35	55.44	63.39	72.21	81.91
	P									18.81	19.21	19.51	19.73	19.85
	Q	70℃								48.54	55.71	63.73	72.62	82.38
	P									18.06	18.43	18.71	18.9	19
	Q	65℃						37.09	42.77	49.29	56.66	64.88	73.97	83.92
	P							15.46	15.92	16.3	16.6	16.82	16.96	17.01
	Q	60℃					32.61	37.71	43.64	50.4	58.01	66.47	75.78	85.96
	P						13.54	13.99	14.37	14.68	14.92	15.09	15.19	15.21
	Q	55℃				28.68	33.24	38.63	44.84	51.87	59.75	68.48	78.05	88.48
	P					11.84	12.27	12.64	12.96	13.22	13.41	13.54	13.6	13.6
	Q	50℃			25.15	29.24	34.13	39.83	46.35	53.7	61.88	70.91	80.78	91.5
	P				10.36	10.76	11.12	11.43	11.69	11.9	12.05	12.15	12.19	12.17
	Q	45℃		21.92	25.58	30.02	35.27	41.32	48.19	55.88	64.4	73.76	83.96	95.01
	P			9.1	9.47	9.8	10.1	10.35	10.56	10.73	10.85	10.93	10.95	10.93
	Q	40℃	18.86	22.13	26.18	31.02	36.66	43.1	50.35	58.41	67.31	77.03	87.59	98.99
	P		8.05	8.38	8.68	8.96	9.2	9.4	9.58	9.71	9.81	9.87	9.89	9.87
	Q	35℃	18.77	22.48	26.96	32.23	38.29	45.15	52.82	61.29	70.59	80.71		
	P		7.51	7.77	8	8.22	8.41	8.58	8.73	8.84	8.93	8.99		
	Q	30℃	18.8	22.98	27.93	33.66	40.17	47.48	55.6	64.52	74.25			
	P		7.05	7.24	7.43	7.6	7.76	7.9	8.02	8.13	8.21			
	Q	25℃	18.93	23.61	29.06	35.29	42.29	50.09	58.68	68.08				
	P		6.67	6.81	6.95	7.09	7.22	7.35	7.46	7.56				
	Q	20℃	19.17	24.39	30.37	37.12	44.65	52.97	62.08					
	P		6.38	6.48	6.59	6.7	6.81	6.93	7.04					

注：以上数据基于 11. 1K 吸气过热度，8. 3K 过冷度
Note: The above data are based on 11.1K superheating and 8.3K subcooling

Heating Capacity R455A 制热量

型号 Model	项目 Item (KW)	Tc\Te	-30℃	-25℃	-20℃	-15℃	-10℃	-5℃	0℃	5℃	10℃	15℃	20℃	25℃
WW250KE-TWD-GN1	Q	72℃								63.13	72.39	82.77	94.29	106.95
	P									24.56	25.08	25.48	25.76	25.91
	Q	70℃								63.39	72.74	83.22	94.83	107.57
	P									23.58	24.07	24.43	24.68	24.81
	Q	65℃						48.43	55.85	64.36	73.99	84.72	96.59	109.58
	P							20.18	20.78	21.28	21.67	21.96	22.14	22.21
	Q	60℃					42.58	49.24	56.98	65.81	75.75	86.79	98.95	112.24
	P						17.67	18.26	18.76	19.17	19.49	19.71	19.83	19.86
	Q	55℃				37.44	43.41	50.44	58.54	67.74	78.02	89.41	101.91	115.54
	P					15.45	16.02	16.51	16.92	17.26	17.51	17.68	17.76	17.75
	Q	50℃			32.84	38.18	44.56	52.01	60.53	70.12	80.8	92.59	105.47	119.48
	P				13.52	14.05	14.52	14.93	15.27	15.54	15.73	15.86	15.91	15.89
	Q	45℃		28.63	33.39	39.2	46.05	53.96	62.93	72.97	84.09	96.31	109.63	124.05
	P			11.88	12.36	12.8	13.19	13.52	13.79	14.01	14.17	14.27	14.3	14.27
	Q	40℃	24.63	28.89	34.18	40.5	47.86	56.27	65.74	76.27	87.88	100.58	114.37	129.26
	P		10.52	10.95	11.34	11.69	12.01	12.28	12.5	12.68	12.81	12.89	12.92	12.89
	Q	35℃	24.51	29.35	35.21	42.09	50	58.96	68.96	80.03	92.17	105.39		
	P		9.8	10.14	10.45	10.73	10.99	11.21	11.4	11.55	11.66	11.74		
	Q	30℃	24.55	30	36.46	43.95	52.46	62	72.59	84.24	96.95			
	P		9.2	9.46	9.7	9.92	10.13	10.31	10.48	10.61	10.72			
	Q	25℃	24.72	30.83	37.95	46.08	55.23	65.41	76.63	88.9				
	P		8.71	8.9	9.08	9.26	9.43	9.59	9.74	9.88				
	Q	20℃	25.03	31.84	39.66	48.47	58.31	69.17	81.06					
	P		8.33	8.46	8.6	8.75	8.89	9.04	9.19					
WW300KE-TWD-GN1	Q	72℃								77.7	89.09	101.87	116.05	131.63
	P									30.23	30.87	31.36	31.7	31.89
	Q	70℃								78.01	89.53	102.42	116.71	132.4
	P									29.03	29.62	30.07	30.38	30.53
	Q	65℃						59.61	68.74	79.22	91.06	104.27	118.87	134.87
	P							24.84	25.58	26.19	26.68	27.03	27.25	27.34
	Q	60℃					52.41	60.61	70.13	81	93.23	106.82	121.78	138.14
	P						21.75	22.48	23.09	23.6	23.98	24.26	24.41	24.45
	Q	55℃				46.08	53.42	62.08	72.05	83.37	96.03	110.04	125.43	142.2
	P					19.02	19.72	20.32	20.83	21.24	21.55	21.75	21.86	21.85
	Q	50℃			40.42	46.99	54.85	64.01	74.49	86.3	99.45	113.95	129.81	147.05
	P				16.64	17.3	17.88	18.37	18.79	19.12	19.37	19.52	19.58	19.55
	Q	45℃		35.23	41.1	48.25	56.68	66.41	77.45	89.81	103.5	118.54	134.93	152.68
	P			14.62	15.22	15.75	16.23	16.64	16.98	17.24	17.44	17.56	17.6	17.56
	Q	40℃	30.31	35.56	42.07	49.85	58.91	69.26	80.91	93.87	108.16	123.79	140.76	159.09
	P		12.94	13.47	13.96	14.39	14.78	15.11	15.39	15.61	15.77	15.87	15.9	15.87
	Q	35℃	30.17	36.13	43.33	51.8	61.54	72.56	84.88	98.5	113.44	129.71		
	P		12.06	12.48	12.86	13.21	13.52	13.8	14.03	14.21	14.35	14.45		
	Q	30℃	30.21	36.92	44.88	54.09	64.56	76.31	89.35	103.68	119.33			
	P		11.32	11.64	11.94	12.21	12.47	12.69	12.89	13.06	13.2			
	Q	25℃	30.42	37.95	46.71	56.71	67.97	80.5	94.31	109.41				
	P		10.72	10.95	11.18	11.4	11.61	11.8	11.99	12.15				
	Q	20℃	30.8	39.19	48.81	59.66	71.76	85.13	99.76					
	P		10.25	10.41	10.59	10.76	10.95	11.13	11.31					

注：以上数据基于 11. 1K 吸气过热度，8. 3K 过冷度
Note: The above data are based on 11.1K superheating and 8.3K subcooling

制热量 Heating Capacity R454B

型号 Model	项目 Item (KW)	Tc\Te	-25℃	-20℃	-15℃	-10℃	-5℃	0℃	5℃	10℃	15℃	20℃	25℃	30℃
WW28KP-TFD-GN1	Q	65℃						6.99	7.91	9.04	10.42	12.09	14.09	16.46
	P							2.76	2.73	2.71	2.68	2.66	2.64	2.62
	Q	60℃					6.22	7.02	8.01	9.21	10.68	12.45	14.56	17.06
	P						2.50	2.48	2.46	2.44	2.42	2.40	2.38	2.37
	Q	55℃				5.53	6.24	7.10	8.15	9.43	10.99	12.86	15.09	17.72
	P					2.25	2.24	2.22	2.21	2.19	2.17	2.16	2.15	2.14
	Q	50℃			4.90	5.53	6.29	7.21	8.33	9.70	11.35	13.33	15.68	18.43
	P				2.02	2.01	2.00	1.99	1.98	1.96	1.95	1.94	1.93	1.92
	Q	45℃		4.32	4.90	5.58	6.38	7.37	8.56	10.01	11.76	13.85	16.32	19.20
	P			1.80	1.80	1.80	1.79	1.78	1.77	1.76	1.75	1.74	1.73	1.73
	Q	40℃	3.78	4.33	4.94	5.66	6.52	7.56	8.84	10.38	12.23	14.43	17.02	
	P		1.60	1.61	1.61	1.60	1.60	1.59	1.58	1.57	1.57	1.56	1.56	
	Q	35℃	3.80	4.37	5.01	5.77	6.69	7.80	9.16	10.79	12.74	15.06		
	P		1.43	1.44	1.44	1.44	1.43	1.42	1.42	1.41	1.41	1.40		
	Q	30℃	3.84	4.44	5.12	5.93	6.90	8.09	9.52	11.25	13.31			
	P		1.28	1.29	1.29	1.29	1.29	1.28	1.28	1.27	1.27			
	Q	25℃	3.92	4.54	5.26	6.12	7.16	8.42	9.94	11.77				
	P		1.16	1.17	1.17	1.17	1.17	1.16	1.16	1.15				
	Q	20℃	4.03	4.68	5.44	6.36	7.46	8.80	10.41					
	P		1.07	1.07	1.07	1.07	1.07	1.07	1.06					
	Q	15℃	4.17	4.86	5.66	6.63	7.81	9.22						
	P		1.00	1.00	1.00	1.00	1.00	0.99						
	Q	10℃	4.35	5.07	5.93	6.96	8.20							
	P		0.95	0.96	0.96	0.96	0.95							
WW34KP-TFD-GN1	Q	65℃						8.45	9.56	10.93	12.6	14.62	17.04	19.92
	P							3.33	3.3	3.27	3.24	3.21	3.19	3.17
	Q	60℃					7.52	8.49	9.69	11.14	12.92	15.06	17.62	20.64
	P						3.02	3	2.97	2.95	2.92	2.9	2.88	2.87
	Q	55℃				6.68	7.54	8.58	9.86	11.41	13.3	15.56	18.26	21.43
	P					2.72	2.71	2.69	2.67	2.65	2.63	2.61	2.6	2.59
	Q	50℃			5.93	6.69	7.61	8.72	10.08	11.74	13.73	16.13	18.97	22.3
	P				2.44	2.43	2.42	2.41	2.39	2.37	2.36	2.35	2.33	2.33
	Q	45℃		5.23	5.93	6.75	7.72	8.91	10.36	12.11	14.23	16.76	19.74	23.23
	P			2.18	2.18	2.17	2.16	2.15	2.14	2.13	2.11	2.1	2.1	2.1
	Q	40℃	4.57	5.24	5.98	6.84	7.88	9.15	10.69	12.55	14.79	17.45	20.58	
	P		1.94	1.94	1.94	1.94	1.93	1.92	1.91	1.9	1.89	1.89	1.88	
	Q	35℃	4.59	5.28	6.06	6.98	8.09	9.44	11.08	13.05	15.41	18.21		
	P		1.73	1.74	1.74	1.74	1.73	1.72	1.72	1.71	1.7	1.7		
	Q	30℃	4.65	5.37	6.19	7.17	8.35	9.78	11.52	13.61	16.1			
	P		1.55	1.56	1.56	1.56	1.56	1.55	1.54	1.54	1.53			
	Q	25℃	4.74	5.5	6.37	7.4	8.66	10.19	12.03	14.23				
	P		1.4	1.41	1.42	1.42	1.41	1.41	1.4	1.39				
	Q	20℃	4.88	5.66	6.59	7.69	9.03	10.64	12.59					
	P		1.29	1.3	1.3	1.3	1.3	1.29	1.28					
	Q	15℃	5.05	5.88	6.85	8.03	9.44	11.16						
	P		1.21	1.21	1.21	1.21	1.21	1.2						
	Q	10℃	5.26	6.13	7.17	8.41	9.92							
	P		1.15	1.16	1.16	1.16	1.15							

注：以上数据基于 11.1K 吸气过热度，8.3K 过冷度
Note: The above data are based on 11.1K superheating and 8.3K subcooling

Heating Capacity R454B 制热量

型号 Model	项目 Item (KW)	Tc\Te	-25℃	-20℃	-15℃	-10℃	-5℃	0℃	5℃	10℃	15℃	20℃	25℃	30℃
WW48KP-TFD-GN1	Q	65℃						12.52	14.16	16.18	18.65	21.65	25.24	29.49
	P							4.88	4.84	4.79	4.74	4.69	4.64	4.59
	Q	60℃					11.13	12.56	14.32	16.48	19.11	22.28	26.07	30.55
	P						4.42	4.38	4.35	4.31	4.27	4.23	4.18	4.14
	Q	55℃				9.89	11.14	12.68	14.56	16.87	19.66	23.02	27.01	31.71
	P					3.98	3.96	3.93	3.9	3.86	3.83	3.8	3.76	3.73
	Q	50℃			8.77	9.89	11.24	12.88	14.89	17.34	20.31	23.85	28.05	32.98
	P				3.57	3.55	3.53	3.51	3.49	3.46	3.43	3.41	3.38	3.36
	Q	45℃		7.74	8.77	9.96	11.4	13.16	15.31	17.91	21.05	24.79	29.2	34.36
	P			3.2	3.18	3.17	3.15	3.13	3.11	3.09	3.07	3.05	3.04	3.02
	Q	40℃	6.8	7.75	8.83	10.11	11.65	13.52	15.81	18.57	21.88	25.82	30.45	
	P		2.86	2.85	2.84	2.83	2.81	2.8	2.78	2.77	2.75	2.74	2.73	
	Q	35℃	6.82	7.83	8.97	10.32	11.97	13.96	16.39	19.32	22.82	26.96		
	P		2.55	2.54	2.54	2.53	2.52	2.51	2.5	2.48	2.47	2.46		
	Q	30℃	6.91	7.96	9.17	10.61	12.36	14.49	17.06	20.16	23.84			
	P		2.29	2.29	2.28	2.27	2.26	2.26	2.25	2.24	2.23			
	Q	25℃	7.05	8.16	9.44	10.97	12.84	15.09	17.82	21.09				
	P		2.08	2.07	2.07	2.06	2.05	2.05	2.04	2.03				
	Q	20℃	7.26	8.41	9.77	11.41	13.39	15.78	18.67					
	P		1.91	1.91	1.9	1.89	1.89	1.88	1.88					
	Q	15℃	7.52	8.74	10.18	11.91	14.01	16.55						
	P		1.79	1.78	1.78	1.77	1.76	1.76						
	Q	10℃	7.83	9.12	10.65	12.49	14.72							
	P		1.72	1.71	1.7	1.69	1.68							
WW61KP-TFD-GN1	Q	65℃						17.19	19.18	21.53	24.32	27.64	31.57	36.2
	P							6.25	6.27	6.3	6.33	6.36	6.39	6.42
	Q	60℃					15.39	17.21	19.36	21.9	24.94	28.54	32.79	37.79
	P						5.6	5.62	5.63	5.64	5.65	5.66	5.67	5.68
	Q	55℃				13.68	15.36	17.31	19.63	22.39	25.68	29.58	34.17	39.54
	P					5.01	5.03	5.04	5.05	5.05	5.04	5.03	5.02	5
	Q	50℃			12.07	13.62	15.39	17.49	19.99	22.98	26.54	30.75	35.7	41.48
	P				4.47	4.5	4.52	4.52	4.52	4.51	4.49	4.46	4.43	4.39
	Q	45℃		10.56	11.99	13.6	15.5	17.76	20.46	23.69	27.54	32.08	37.4	43.58
	P			3.97	4.02	4.04	4.06	4.06	4.04	4.02	3.99	3.95	3.9	3.85
	Q	40℃	9.15	10.47	11.94	13.64	15.67	18.1	21.02	24.52	28.66	33.55	39.25	
	P		3.49	3.56	3.6	3.63	3.65	3.64	3.62	3.59	3.55	3.5	3.44	
	Q	35℃	9.05	10.39	11.93	13.74	15.92	18.54	21.69	25.45	29.92	35.16		
	P		3.11	3.19	3.24	3.27	3.28	3.28	3.26	3.22	3.17	3.11		
	Q	30℃	8.97	10.35	11.96	13.89	16.23	19.06	22.46	26.51	31.31			
	P		2.78	2.86	2.92	2.96	2.97	2.97	2.94	2.9	2.85			
	Q	25℃	8.9	10.33	12.03	14.1	16.62	19.67	23.33	27.69				
	P		2.49	2.58	2.65	2.69	2.71	2.71	2.68	2.64				
	Q	20℃	8.84	10.33	12.15	14.37	17.08	20.36	24.3					
	P		2.24	2.34	2.42	2.47	2.5	2.5	2.48					
	Q	15℃	8.8	10.37	12.31	14.7	17.62	21.15						
	P		2.03	2.15	2.24	2.3	2.33	2.34						
	Q	10℃	8.77	10.44	12.52	15.09	18.23							
	P		1.86	1.99	2.1	2.17	2.21							

注：以上数据基于 11.1K 吸气过热度，8.3K 过冷度
Note: The above data are based on 11.1K superheating and 8.3K subcooling

制热量 Heating Capacity R454B

型号 Model	项目 Item (KW)	Tc\Te	-25℃	-20℃	-15℃	-10℃	-5℃	0℃	5℃	10℃	15℃	20℃	25℃	30℃
WW72KP-TFD-GN1	Q	65℃						18.05	20.14	22.61	25.54	29.03	33.15	38.01
	P							6.56	6.59	6.62	6.64	6.67	6.71	6.74
	Q	60℃					16.16	18.07	20.33	23	26.19	29.97	34.44	39.68
	P						5.88	5.9	5.91	5.93	5.94	5.95	5.95	5.96
	Q	55℃				14.37	16.13	18.18	20.61	23.51	26.96	31.06	35.88	41.52
	P					5.26	5.28	5.3	5.3	5.3	5.29	5.28	5.27	5.26
	Q	50℃			12.68	14.3	16.17	18.37	21	24.13	27.87	32.29	37.49	43.55
	P				4.7	4.73	4.74	4.75	4.74	4.73	4.71	4.68	4.65	4.61
	Q	45℃		11.09	12.59	14.28	16.28	18.65	21.48	24.88	28.92	33.68	39.27	45.76
	P			4.17	4.22	4.25	4.26	4.26	4.25	4.22	4.19	4.15	4.1	4.04
	Q	40℃	9.61	10.99	12.53	14.33	16.46	19.01	22.08	25.74	30.1	35.23	41.22	
	P		3.67	3.74	3.78	3.82	3.83	3.82	3.81	3.77	3.73	3.67	3.61	
	Q	35℃	9.51	10.91	12.52	14.43	16.71	19.47	22.78	26.73	31.42	36.92		
	P		3.27	3.35	3.4	3.44	3.45	3.44	3.42	3.38	3.33	3.26		
	Q	30℃	9.42	10.86	12.56	14.59	17.04	20.01	23.58	27.84	32.87			
	P		2.92	3.01	3.07	3.11	3.12	3.12	3.09	3.05	2.99			
	Q	25℃	9.35	10.84	12.63	14.81	17.45	20.65	24.5	29.07				
	P		2.61	2.71	2.78	2.83	2.85	2.84	2.82	2.77				
	Q	20℃	9.28	10.85	12.76	15.09	17.93	21.38	25.52					
	P		2.35	2.46	2.54	2.6	2.62	2.62	2.6					
	Q	15℃	9.24	10.89	12.93	15.43	18.5	22.21						
	P		2.13	2.25	2.35	2.41	2.45	2.45						
	Q	10℃	9.21	10.97	13.15	15.84	19.14							
	P		1.95	2.09	2.2	2.28	2.32							
WW81KP-TFD-GN1	Q	65℃						21.22	23.81	26.89	30.55	34.83	39.83	45.6
	P							8.02	8.02	8.05	8.1	8.17	8.28	8.42
	Q	60℃					18.89	21.2	23.98	27.28	31.18	35.75	41.06	47.17
	P						7.18	7.17	7.18	7.2	7.24	7.3	7.39	7.51
	Q	55℃				16.76	18.82	21.3	24.27	27.8	31.96	36.82	42.45	48.92
	P					6.41	6.4	6.39	6.4	6.42	6.45	6.5	6.57	6.67
	Q	50℃			14.84	16.65	18.85	21.51	24.68	28.45	32.88	38.05	44.01	50.85
	P				5.69	5.69	5.69	5.69	5.7	5.71	5.73	5.77	5.83	5.9
	Q	45℃		13.1	14.69	16.63	18.98	21.82	25.22	29.23	33.95	39.42	45.74	52.95
	P			5.02	5.04	5.05	5.06	5.06	5.07	5.08	5.09	5.12	5.16	5.21
	Q	40℃	11.55	12.93	14.63	16.7	19.21	22.25	25.87	30.15	35.16	40.96	47.63	
	P		4.38	4.42	4.46	4.48	4.49	4.5	4.51	4.51	4.52	4.54	4.56	
	Q	35℃	11.37	12.84	14.64	16.85	19.55	22.79	26.65	31.2	36.51	42.65		
	P		3.83	3.9	3.95	3.99	4.01	4.02	4.03	4.03	4.03	4.03		
	Q	30℃	11.25	12.81	14.73	17.1	19.98	23.44	27.56	32.39	38.01			
	P		3.36	3.45	3.52	3.57	3.6	3.61	3.62	3.62	3.61			
	Q	25℃	11.2	12.85	14.91	17.44	20.52	24.21	28.59	33.71				
	P		2.97	3.08	3.16	3.22	3.26	3.28	3.29	3.28				
	Q	20℃	11.2	12.97	15.17	17.88	21.17	25.1	29.74					
	P		2.65	2.78	2.88	2.95	3	3.02	3.03					
	Q	15℃	11.26	13.16	15.51	18.41	21.92	26.1						
	P		2.41	2.56	2.67	2.76	2.81	2.84						
	Q	10℃	11.39	13.42	15.94	19.04	22.77							
	P		2.24	2.41	2.54	2.64	2.7							

注：以上数据基于 11.1K 吸气过热度，8.3K 过冷度
Note: The above data are based on 11.1K superheating and 8.3K subcooling

Heating Capacity R454B 制热量

型号 Model	项目 Item (KW)	Tc\Te	-25℃	-20℃	-15℃	-10℃	-5℃	0℃	5℃	10℃	15℃	20℃	25℃	30℃
WW94KP-TFD-GN1	Q	65℃						24.68	27.69	31.28	35.53	40.52	46.33	53.04
	P							9.33	9.33	9.36	9.42	9.51	9.63	9.79
	Q	60℃					21.97	24.67	27.89	31.73	36.27	41.59	47.76	54.87
	P						8.35	8.34	8.35	8.37	8.42	8.49	8.6	8.73
	Q	55℃				19.5	21.89	24.78	28.23	32.34	37.18	42.83	49.38	56.91
	P					7.45	7.44	7.44	7.44	7.46	7.5	7.56	7.65	7.76
	Q	50℃			17.26	19.37	21.93	25.02	28.71	33.09	38.25	44.25	51.19	59.15
	P				6.62	6.62	6.62	6.62	6.63	6.64	6.67	6.72	6.78	6.87
	Q	45℃		15.24	17.09	19.34	22.08	25.38	29.33	34	39.49	45.86	53.2	61.59
	P			5.84	5.86	5.87	5.88	5.89	5.89	5.9	5.92	5.95	6	6.06
	Q	40℃	13.43	15.04	17.01	19.42	22.35	25.88	30.09	35.07	40.89	47.64	55.4	
	P		5.09	5.15	5.19	5.21	5.23	5.24	5.24	5.25	5.26	5.28	5.31	
	Q	35℃	13.23	14.93	17.03	19.6	22.74	26.51	31	36.29	42.47	49.61		
	P		4.46	4.54	4.6	4.64	4.66	4.68	4.68	4.69	4.69	4.69		
	Q	30℃	13.09	14.9	17.14	19.89	23.24	27.27	32.05	37.67	44.22			
	P		3.91	4.01	4.09	4.15	4.18	4.2	4.21	4.21	4.2			
	Q	25℃	13.02	14.95	17.35	20.29	23.87	28.16	33.25	39.22				
	P		3.45	3.58	3.68	3.75	3.79	3.81	3.82	3.81				
	Q	20℃	13.03	15.08	17.65	20.8	24.62	29.19	34.6					
	P		3.08	3.23	3.35	3.43	3.49	3.52	3.52					
	Q	15℃	13.1	15.3	18.05	21.42	25.49	30.36						
	P		2.8	2.98	3.11	3.21	3.27	3.3						
	Q	10℃	13.25	15.61	18.54	22.14	26.49							
	P		2.61	2.81	2.96	3.07	3.14							
WW108KP-TFD-GN1	Q	65℃						27.18	30.5	34.45	39.13	44.63	51.02	58.42
	P							10.27	10.28	10.31	10.38	10.47	10.61	10.78
	Q	60℃					24.2	27.17	30.72	34.95	39.95	45.8	52.6	60.43
	P						9.2	9.19	9.19	9.22	9.27	9.35	9.47	9.62
	Q	55℃				21.48	24.11	27.29	31.09	35.61	40.94	47.17	54.39	62.68
	P					8.21	8.2	8.19	8.2	8.22	8.26	8.33	8.42	8.54
	Q	50℃			19.01	21.33	24.15	27.55	31.62	36.45	42.12	48.74	56.38	65.14
	P				7.29	7.29	7.29	7.29	7.3	7.31	7.35	7.4	7.47	7.56
	Q	45℃		16.78	18.82	21.3	24.32	27.96	32.3	37.45	43.49	50.51	58.59	67.84
	P			6.43	6.46	6.47	6.48	6.48	6.49	6.5	6.52	6.56	6.61	6.68
	Q	40℃	14.79	16.57	18.74	21.39	24.61	28.5	33.14	38.62	45.04	52.47	61.01	
	P		5.61	5.67	5.71	5.74	5.76	5.77	5.78	5.78	5.79	5.81	5.84	
	Q	35℃	14.57	16.44	18.76	21.59	25.04	29.2	34.14	39.97	46.77	54.64		
	P		4.91	5	5.06	5.11	5.13	5.15	5.16	5.16	5.16	5.16		
	Q	30℃	14.42	16.41	18.88	21.91	25.6	30.03	35.3	41.49	48.7			
	P		4.31	4.42	4.51	4.57	4.61	4.63	4.64	4.63	4.62			
	Q	25℃	14.34	16.46	19.1	22.35	26.29	31.02	36.62	43.19				
	P		3.8	3.94	4.05	4.13	4.17	4.2	4.21	4.2				
	Q	20℃	14.35	16.61	19.44	22.91	27.12	32.15	38.1					
	P		3.4	3.56	3.69	3.78	3.84	3.87	3.88					
	Q	15℃	14.43	16.85	19.88	23.59	28.08	33.43						
	P		3.08	3.28	3.42	3.53	3.6	3.64						
	Q	10℃	14.59	17.19	20.42	24.39	29.17							
	P		2.87	3.09	3.26	3.38	3.46							

注：以上数据基于 11.1K 吸气过热度，8.3K 过冷度
Note: The above data are based on 11.1K superheating and 8.3K subcooling

制热量 Heating Capacity R454B

型号 Model	项目 Item (KW)	Tc\Te	-25℃	-20℃	-15℃	-10℃	-5℃	0℃	5℃	10℃	15℃	20℃	25℃	30℃
WW120KP-TFD-GN1	Q	65℃						30.78	34.54	39.02	44.32	50.54	57.78	66.15
	P							11.63	11.64	11.68	11.75	11.86	12.01	12.21
	Q	60℃					27.4	30.76	34.79	39.58	45.24	51.87	59.57	68.44
	P						10.41	10.4	10.41	10.44	10.5	10.59	10.72	10.89
	Q	55℃				24.32	27.31	30.9	35.21	40.33	46.37	53.42	61.59	70.98
	P					9.3	9.28	9.28	9.28	9.31	9.36	9.43	9.54	9.68
	Q	50℃			21.52	24.16	27.35	31.2	35.81	41.28	47.7	55.2	63.85	73.77
	P				8.26	8.26	8.25	8.26	8.26	8.28	8.32	8.38	8.46	8.57
	Q	45℃		19	21.31	24.13	27.54	31.66	36.58	42.41	49.25	57.2	66.35	76.82
	P			7.28	7.31	7.33	7.33	7.34	7.35	7.36	7.39	7.43	7.48	7.56
	Q	40℃	16.75	18.76	21.22	24.22	27.88	32.28	37.53	43.74	51	59.42	69.1	
	P		6.35	6.42	6.47	6.5	6.52	6.53	6.54	6.55	6.56	6.58	6.62	
	Q	35℃	16.5	18.62	21.24	24.45	28.36	33.06	38.66	45.27	52.97	61.87		
	P		5.56	5.66	5.73	5.78	5.81	5.83	5.84	5.84	5.84	5.85		
	Q	30℃	16.33	18.58	21.38	24.81	28.99	34.01	39.98	46.99	55.15			
	P		4.88	5.01	5.1	5.17	5.22	5.24	5.25	5.25	5.23			
	Q	25℃	16.24	18.65	21.63	25.31	29.77	35.13	41.47	48.91				
	P		4.31	4.47	4.59	4.67	4.73	4.76	4.77	4.76				
	Q	20℃	16.25	18.81	22.01	25.94	30.71	36.41	43.15					
	P		3.84	4.03	4.18	4.28	4.35	4.38	4.39					
	Q	15℃	16.34	19.09	22.51	26.71	31.8	37.86						
	P		3.49	3.71	3.88	4	4.08	4.12						
	Q	10℃	16.53	19.47	23.13	27.62	33.04							
	P		3.25	3.5	3.69	3.83	3.92							
WW144KP-TFD-GN1	Q	65℃						34.11	38.27	43.23	49.1	56	64.03	73.3
	P							12.89	12.9	12.94	13.02	13.14	13.31	13.53
	Q	60℃					30.36	34.09	38.55	43.86	50.13	57.47	66	75.83
	P						11.54	11.53	11.54	11.57	11.64	11.74	11.88	12.07
	Q	55℃				26.95	30.26	34.24	39.01	44.69	51.38	59.19	68.24	78.65
	P					10.3	10.28	10.28	10.29	10.32	10.37	10.45	10.57	10.72
	Q	50℃			23.85	26.77	30.31	34.57	39.68	45.73	52.86	61.16	70.75	81.74
	P				9.15	9.15	9.15	9.15	9.16	9.18	9.22	9.28	9.37	9.49
	Q	45℃		21.06	23.62	26.73	30.52	35.08	40.53	46.99	54.57	63.37	73.52	85.12
	P			8.07	8.1	8.12	8.13	8.13	8.14	8.16	8.19	8.23	8.29	8.38
	Q	40℃	18.56	20.79	23.51	26.84	30.89	35.77	41.59	48.47	56.51	65.84	76.56	
	P		7.03	7.11	7.17	7.2	7.22	7.24	7.25	7.26	7.27	7.29	7.33	
	Q	35℃	18.28	20.63	23.53	27.09	31.42	36.63	42.84	50.16	58.69	68.56		
	P		6.16	6.27	6.35	6.41	6.44	6.46	6.47	6.48	6.48	6.48		
	Q	30℃	18.09	20.59	23.69	27.49	32.12	37.69	44.3	52.07	61.11			
	P		5.4	5.55	5.66	5.73	5.78	5.81	5.82	5.81	5.8			
	Q	25℃	18	20.66	23.97	28.04	32.99	38.92	45.95	54.19				
	P		4.77	4.95	5.08	5.18	5.24	5.27	5.28	5.27				
	Q	20℃	18	20.85	24.39	28.74	34.02	40.34	47.81					
	P		4.26	4.47	4.63	4.74	4.82	4.86	4.87					
	Q	15℃	18.11	21.15	24.94	29.6	35.23	41.95						
	P		3.87	4.11	4.3	4.43	4.52	4.57						
	Q	10℃	18.31	21.57	25.63	30.6	36.61							
	P		3.6	3.88	4.09	4.24	4.34							

注：以上数据基于 11. 1K 吸气过热度，8. 3K 过冷度
Note: The above data are based on 11.1K superheating and 8.3K subcooling

Heating Capacity R454B 制热量

型号 Model	项目 Item (KW)	Tc\Te	-25℃	-20℃	-15℃	-10℃	-5℃	0℃	5℃	10℃	15℃	20℃	25℃	30℃
WW154KP-TFD-GN1	Q	65℃						39.33	44.13	49.85	56.62	64.57	73.83	84.52
	P							14.87	14.87	14.92	15.01	15.15	15.35	15.6
	Q	60℃					35.01	39.31	44.45	50.57	57.8	66.27	76.11	87.44
	P						13.31	13.29	13.3	13.34	13.42	13.54	13.7	13.91
	Q	55℃				31.07	34.89	39.48	44.99	51.53	59.24	68.25	78.69	90.69
	P					11.88	11.86	11.85	11.86	11.9	11.96	12.05	12.18	12.36
	Q	50℃			27.5	30.87	34.95	39.86	45.75	52.74	60.95	70.52	81.58	94.26
	P				10.55	10.55	10.55	10.55	10.56	10.58	10.63	10.7	10.81	10.94
	Q	45℃		24.28	27.23	30.82	35.19	40.45	46.74	54.19	62.92	73.08	84.78	98.15
	P			9.31	9.34	9.36	9.37	9.38	9.39	9.41	9.44	9.49	9.56	9.66
	Q	40℃	21.4	23.97	27.11	30.95	35.62	41.24	47.96	55.89	65.17	75.92	88.28	
	P		8.11	8.2	8.26	8.3	8.33	8.35	8.36	8.37	8.38	8.41	8.45	
	Q	35℃	21.08	23.79	27.14	31.24	36.23	42.24	49.4	57.84	67.68	79.06		
	P		7.1	7.23	7.32	7.39	7.43	7.45	7.46	7.47	7.47	7.47		
	Q	30℃	20.86	23.74	27.31	31.7	37.04	43.46	51.08	60.04	70.46			
	P		6.23	6.4	6.52	6.61	6.67	6.7	6.71	6.7	6.69			
	Q	25℃	20.75	23.82	27.64	32.34	38.04	44.88	52.99	62.49				
	P		5.5	5.71	5.86	5.97	6.04	6.08	6.09	6.08				
	Q	20℃	20.76	24.04	28.12	33.14	39.23	46.52	55.13					
	P		4.91	5.15	5.34	5.47	5.56	5.6	5.61					
	Q	15℃	20.88	24.39	28.76	34.13	40.62	48.38						
	P		4.46	4.74	4.96	5.11	5.21	5.26						
	Q	10℃	21.12	24.87	29.55	35.29	42.21							
	P		4.16	4.47	4.72	4.89	5.01							
WW170KP-TFD-GN1	Q	65℃						46.12	51.75	58.46	66.39	75.72	86.57	99.11
	P							17.43	17.44	17.5	17.6	17.77	18	18.29
	Q	60℃					41.06	46.09	52.12	59.3	67.78	77.71	89.24	102.54
	P						15.6	15.59	15.6	15.64	15.73	15.87	16.06	16.32
	Q	55℃				36.44	40.91	46.3	52.75	60.43	69.47	80.03	92.27	106.34
	P					13.93	13.91	13.9	13.91	13.95	14.02	14.13	14.29	14.5
	Q	50℃			32.25	36.19	40.98	46.74	53.65	61.84	71.47	82.69	95.66	110.52
	P				12.38	12.37	12.37	12.37	12.38	12.41	12.47	12.55	12.67	12.83
	Q	45℃		28.47	31.93	36.15	41.26	47.43	54.81	63.54	73.79	85.69	99.41	115.09
	P			10.91	10.95	10.97	10.99	11	11.01	11.03	11.07	11.13	11.21	11.33
	Q	40℃	25.1	28.11	31.79	36.29	41.76	48.36	56.23	65.53	76.41	89.03	103.52	
	P		9.51	9.61	9.69	9.74	9.77	9.79	9.8	9.81	9.83	9.86	9.91	
	Q	35℃	24.72	27.9	31.82	36.63	42.49	49.53	57.93	67.82	79.36	92.7		
	P		8.33	8.48	8.59	8.66	8.71	8.74	8.75	8.76	8.76	8.76		
	Q	30℃	24.46	27.84	32.03	37.17	43.43	50.96	59.89	70.4	82.62			
	P		7.31	7.5	7.65	7.75	7.82	7.85	7.86	7.86	7.84			
	Q	25℃	24.34	27.94	32.41	37.92	44.61	52.63	62.13	73.28				
	P		6.45	6.69	6.87	7	7.08	7.13	7.14	7.13				
	Q	20℃	24.34	28.19	32.98	38.87	46.01	54.55	64.65					
	P		5.76	6.04	6.26	6.41	6.51	6.57	6.58					
	Q	15℃	24.48	28.59	33.72	40.02	47.64	56.73						
	P		5.23	5.56	5.81	5.99	6.11	6.17						
	Q	10℃	24.76	29.16	34.65	41.38	49.5							
	P		4.87	5.24	5.53	5.74	5.87							

注：以上数据基于 11. 1K 吸气过热度，8. 3K 过冷度
Note: The above data are based on 11.1K superheating and 8.3K subcooling

制热量 Heating Capacity R454B

型号 Model	项目 Item (KW)	Tc\Te	-25℃	-20℃	-15℃	-10℃	-5℃	0℃	5℃	10℃	15℃	20℃	25℃	30℃
WW235KP-TWD-GN1	Q	65℃						58.46	65.59	74.1	84.16	95.98	109.74	125.63
	P							22.1	22.11	22.18	22.32	22.52	22.81	23.19
	Q	60℃					52.04	58.42	66.07	75.17	85.91	98.5	113.12	129.97
	P						19.78	19.76	19.77	19.83	19.94	20.12	20.36	20.68
	Q	55℃				46.19	51.86	58.69	66.87	76.59	88.06	101.45	116.96	134.79
	P					17.66	17.63	17.62	17.63	17.68	17.77	17.91	18.11	18.37
	Q	50℃			40.87	45.88	51.94	59.25	68	78.39	90.6	104.82	121.26	140.1
	P				15.69	15.68	15.68	15.68	15.69	15.73	15.8	15.91	16.06	16.27
	Q	45℃		36.09	40.48	45.82	52.3	60.12	69.47	80.54	93.53	108.62	126.01	145.89
	P			13.83	13.88	13.91	13.93	13.94	13.96	13.98	14.03	14.1	14.21	14.36
	Q	40℃	31.81	35.63	40.3	46	52.94	61.3	71.28	83.07	96.86	112.85	131.22	
	P		12.06	12.19	12.28	12.34	12.38	12.41	12.42	12.44	12.46	12.5	12.57	
	Q	35℃	31.33	35.36	40.34	46.44	53.86	62.79	73.43	85.97	100.59	117.51		
	P		10.56	10.75	10.88	10.98	11.04	11.08	11.09	11.1	11.1	11.1		
	Q	30℃	31.01	35.29	40.6	47.12	55.06	64.59	75.92	89.24	104.73			
	P		9.26	9.51	9.69	9.82	9.91	9.95	9.97	9.96	9.94			
	Q	25℃	30.85	35.41	41.08	48.06	56.54	66.71	78.76	92.88				
	P		8.18	8.48	8.71	8.87	8.98	9.04	9.05	9.03				
	Q	20℃	30.86	35.73	41.8	49.26	58.32	69.15	81.95					
	P		7.3	7.66	7.93	8.13	8.26	8.33	8.34					
	Q	15℃	31.04	36.25	42.74	50.73	60.38	71.91						
	P		6.63	7.05	7.37	7.6	7.75	7.83						
	Q	10℃	31.39	36.97	43.92	52.45	62.74							
	P		6.18	6.65	7.01	7.27	7.45							
WW292KP-TWD-GN1	Q	65℃						72.23	81.04	91.55	103.98	118.58	135.58	155.22
	P							27.3	27.32	27.4	27.57	27.83	28.18	28.65
	Q	60℃					64.3	72.18	81.63	92.87	106.15	121.7	139.77	160.59
	P						24.44	24.41	24.43	24.5	24.64	24.86	25.16	25.55
	Q	55℃				57.07	64.07	72.51	82.62	94.64	108.8	125.35	144.52	166.54
	P					21.82	21.78	21.77	21.78	21.85	21.96	22.13	22.38	22.7
	Q	50℃			50.5	56.69	64.18	73.21	84.02	96.85	111.93	129.51	149.82	173.1
	P				19.38	19.38	19.37	19.37	19.39	19.44	19.52	19.65	19.84	20.1
	Q	45℃		44.59	50.01	56.61	64.62	74.28	85.84	99.51	115.56	134.2	155.69	180.25
	P			17.09	17.15	17.19	17.21	17.22	17.24	17.28	17.34	17.43	17.56	17.75
	Q	40℃	39.31	44.02	49.79	56.84	65.41	75.74	88.07	102.64	119.68	139.43	162.13	
	P		14.89	15.06	15.17	15.25	15.3	15.33	15.35	15.37	15.4	15.45	15.53	
	Q	35℃	38.71	43.69	49.84	57.37	66.54	77.58	90.72	106.21	124.29	145.18		
	P		13.04	13.28	13.45	13.57	13.64	13.69	13.71	13.71	13.71	13.72		
	Q	30℃	38.31	43.6	50.16	58.22	68.02	79.8	93.8	110.26	129.4			
	P		11.45	11.75	11.98	12.14	12.24	12.3	12.32	12.31	12.28			
	Q	25℃	38.11	43.75	50.76	59.39	69.86	82.42	97.31	114.76				
	P		10.1	10.48	10.76	10.96	11.09	11.16	11.18	11.16				
	Q	20℃	38.13	44.14	51.64	60.87	72.05	85.43	101.25					
	P		9.02	9.46	9.8	10.04	10.2	10.29	10.31					
	Q	15℃	38.35	44.78	52.81	62.67	74.6	88.84						
	P		8.2	8.71	9.1	9.39	9.57	9.67						
	Q	10℃	38.78	45.67	54.27	64.81	77.52							
	P		7.63	8.21	8.66	8.99	9.2							

注：以上数据基于 11.1K 吸气过热度，8.3K 过冷度
Note: The above data are based on 11.1K superheating and 8.3K subcooling

Heating Capacity R32 制热量

型号 Model	项目 Item (KW)	Tc\Te	-25℃	-20℃	-15℃	-10℃	-5℃	0℃	5℃	10℃	15℃	20℃
WW28KR-TFD-GN1	Q	65℃							9.31	9.86	10.89	
	P								3.1	3.08	3.07	
	Q	60℃						8.31	8.64	9.34	10.5	12.22
	P							2.8	2.78	2.76	2.75	2.76
	Q	55℃					7.59	7.81	8.29	9.12	10.4	12.22
	P						2.52	2.5	2.48	2.47	2.46	2.46
	Q	50℃				7.01	7.24	7.61	8.21	9.16	10.53	12.45
	P					2.24	2.23	2.23	2.22	2.21	2.19	2.18
	Q	45℃			6.43	6.78	7.15	7.65	8.36	9.4	10.87	12.85
	P				1.94	1.97	1.98	1.99	1.98	1.97	1.95	1.93
	Q	40℃		5.71	6.29	6.78	7.27	7.88	8.69	9.81	11.34	13.38
	P			1.63	1.69	1.73	1.76	1.78	1.78	1.76	1.74	1.7
	Q	35℃	4.71	5.63	6.35	6.96	7.56	8.26	9.15	10.34	11.92	14
	P		1.27	1.38	1.47	1.54	1.58	1.6	1.6	1.58	1.55	1.5
	Q	30℃	4.66	5.72	6.55	7.27	7.96	8.74	9.7	10.93	12.55	
	P		1.04	1.18	1.29	1.37	1.42	1.45	1.45	1.43	1.39	
	Q	25℃	4.75	5.92	6.86	7.67	8.44	9.27	10.28	11.55		
	P		0.85	1.01	1.14	1.24	1.3	1.33	1.34	1.31		
	Q	20℃	4.92	6.2	7.22	8.1	8.93	9.81	10.85			
	P		0.69	0.88	1.03	1.14	1.21	1.25	1.25			
	Q	15℃	5.14	6.5	7.59	8.53	9.4	10.31				
	P		0.58	0.79	0.96	1.08	1.16	1.19				
	Q	10℃	5.34	6.77	7.92	8.9	9.8	10.72				
	P		0.5	0.74	0.92	1.05	1.13	1.16				
WW34KR-TFD-GN1	Q	65℃							11.27	11.93	13.17	
	P								3.75	3.73	3.72	
	Q	60℃						10.05	10.45	11.3	12.7	14.79
	P							3.39	3.36	3.34	3.33	3.33
	Q	55℃					9.18	9.45	10.03	11.03	12.58	14.79
	P						3.05	3.02	3	2.99	2.97	2.97
	Q	50℃				8.48	8.76	9.21	9.94	11.08	12.74	15.06
	P					2.71	2.7	2.7	2.68	2.67	2.65	2.64
	Q	45℃			7.78	8.2	8.65	9.25	10.12	11.38	13.15	15.55
	P				2.35	2.38	2.4	2.4	2.4	2.38	2.36	2.33
	Q	40℃		6.91	7.61	8.2	8.8	9.53	10.52	11.87	13.72	16.19
	P			1.97	2.04	2.1	2.13	2.15	2.15	2.13	2.1	2.06
	Q	35℃	5.7	6.81	7.68	8.42	9.15	9.99	11.07	12.51	14.42	16.93
	P		1.54	1.67	1.78	1.86	1.91	1.93	1.94	1.92	1.88	1.82
	Q	30℃	5.64	6.92	7.93	8.79	9.63	10.57	11.73	13.23	15.18	
	P		1.26	1.43	1.56	1.66	1.72	1.76	1.76	1.73	1.68	
	Q	25℃	5.75	7.16	8.3	9.27	10.21	11.22	12.43	13.97		
	P		1.03	1.23	1.38	1.5	1.58	1.61	1.62	1.58		
	Q	20℃	5.96	7.5	8.74	9.8	10.8	11.87	13.12			
	P		0.84	1.07	1.25	1.38	1.47	1.51	1.51			
	Q	15℃	6.22	7.86	9.18	10.32	11.37	12.47				
	P		0.7	0.96	1.16	1.3	1.4	1.44				
	Q	10℃	6.47	8.19	9.58	10.76	11.85	12.97				
	P		0.61	0.89	1.11	1.27	1.37	1.41				

注：以上数据基于 11.1K 吸气过热度，8.3K 过冷度
Note: The above data are based on 11.1K superheating and 8.3K subcooling

制热量 Heating Capacity R32

型号 Model	项目 Item (KW)	Tc\Te	-25℃	-20℃	-15℃	-10℃	-5℃	0℃	5℃	10℃	15℃	20℃
WW48KR-TFD-GN1	Q	65℃							16.74	17.73	19.58	
	P								5.58	5.54	5.52	
	Q	60℃						14.94	15.54	16.79	18.87	21.98
	P							5.04	4.99	4.96	4.95	4.95
	Q	55℃					13.64	14.05	14.91	16.39	18.69	21.98
	P						4.53	4.5	4.46	4.44	4.42	4.41
	Q	50℃				12.6	13.02	13.68	14.77	16.46	18.94	22.38
	P					4.02	4.02	4.01	3.99	3.97	3.94	3.92
	Q	45℃			11.56	12.19	12.86	13.75	15.04	16.91	19.54	23.1
	P				3.49	3.54	3.56	3.57	3.56	3.54	3.51	3.47
	Q	40℃		10.27	11.31	12.19	13.08	14.16	15.63	17.64	20.4	24.06
	P			2.92	3.04	3.12	3.17	3.2	3.19	3.17	3.13	3.06
	Q	35℃	8.47	10.13	11.41	12.51	13.59	14.85	16.45	18.59	21.43	25.17
	P		2.29	2.49	2.64	2.76	2.84	2.87	2.88	2.85	2.79	2.7
	Q	30℃	8.38	10.28	11.78	13.07	14.32	15.71	17.43	19.66	22.56	
	P		1.87	2.12	2.32	2.46	2.56	2.61	2.61	2.58	2.5	
	Q	25℃	8.54	10.65	12.33	13.78	15.17	16.67	18.48	20.76		
	P		1.52	1.82	2.06	2.23	2.34	2.4	2.4	2.35		
	Q	20℃	8.85	11.14	12.98	14.56	16.06	17.64	19.5			
	P		1.25	1.59	1.86	2.05	2.18	2.24	2.24			
	Q	15℃	9.24	11.68	13.65	15.33	16.9	18.54				
	P		1.04	1.42	1.72	1.94	2.08	2.14				
	Q	10℃	9.61	12.17	14.24	16	17.61	19.27				
	P		0.91	1.32	1.65	1.88	2.03	2.09				
WW61KR-TFD-GN1	Q	65℃							22.11	24.55	27.63	
	P								7.45	7.31	7.23	
	Q	60℃						19.99	22.2	24.97	28.4	32.57
	P							6.71	6.58	6.51	6.47	6.43
	Q	55℃					17.9	19.93	22.45	25.54	29.31	33.82
	P						6.01	5.91	5.86	5.83	5.81	5.74
	Q	50℃				15.83	17.72	20.03	22.84	26.25	30.34	35.18
	P					5.33	5.26	5.25	5.26	5.26	5.22	5.1
	Q	45℃			13.74	15.55	17.69	20.28	23.37	27.08	31.47	36.63
	P				4.63	4.62	4.66	4.71	4.76	4.75	4.67	4.48
	Q	40℃		11.62	13.39	15.42	17.81	20.65	24.02	28	32.68	38.14
	P			3.89	3.95	4.06	4.18	4.28	4.33	4.3	4.15	3.86
	Q	35℃	9.44	11.21	13.18	15.43	18.06	21.14	24.75	29	33.96	39.71
	P		3.09	3.24	3.43	3.62	3.8	3.92	3.95	3.86	3.63	3.2
	Q	30℃	9	10.95	13.11	15.57	18.41	21.71	25.57	30.06	35.28	
	P		2.45	2.73	3.03	3.29	3.49	3.6	3.59	3.43	3.07	
	Q	25℃	8.71	10.82	13.16	15.81	18.84	22.36	26.44	31.17		
	P		1.96	2.36	2.72	3.03	3.23	3.31	3.23	2.96		
	Q	20℃	8.55	10.81	13.31	16.13	19.35	23.06	27.35			
	P		1.59	2.08	2.5	2.81	3	3.02	2.84			
	Q	15℃	8.49	10.89	13.54	16.51	19.91	23.8				
	P		1.33	1.87	2.32	2.62	2.76	2.69				
	Q	10℃	8.53	11.05	13.83	16.95	20.5	24.56				
	P		1.14	1.72	2.16	2.43	2.49	2.31				

注：以上数据基于 11.1K 吸气过热度，8.3K 过冷度
Note: The above data are based on 11.1K superheating and 8.3K subcooling

Heating Capacity R32 制热量

型号 Model	项目 Item (KW)	Tc\Te	-25℃	-20℃	-15℃	-10℃	-5℃	0℃	5℃	10℃	15℃	20℃
WW72KR-TFD-GN1	Q	65℃							22.79	25.67	29.13	
	P								7.7	7.74	7.79	
	Q	60℃						20.26	22.87	26.01	29.79	34.3
	P							6.83	6.85	6.86	6.88	6.89
	Q	55℃					17.9	20.25	23.09	26.52	30.63	35.52
	P						6.07	6.08	6.08	6.07	6.06	6.04
	Q	50℃				15.7	17.82	20.37	23.45	27.18	31.64	36.93
	P					5.38	5.4	5.4	5.39	5.36	5.32	5.28
	Q	45℃			13.67	15.56	17.84	20.6	23.95	27.99	32.82	38.53
	P				4.76	4.79	4.8	4.8	4.77	4.73	4.67	4.6
	Q	40℃		11.79	13.47	15.49	17.95	20.95	24.58	28.96	34.17	40.32
	P			4.16	4.23	4.27	4.28	4.27	4.24	4.18	4.11	4.01
	Q	35℃	10.06	11.56	13.34	15.51	18.17	21.41	25.34	30.07	35.68	42.29
	P		3.56	3.68	3.76	3.81	3.83	3.82	3.79	3.72	3.63	3.52
	Q	30℃	9.81	11.37	13.26	15.6	18.47	21.98	26.23	31.32	37.36	
	P		3.13	3.27	3.37	3.43	3.46	3.45	3.42	3.35	3.25	
	Q	25℃	9.58	11.21	13.24	15.75	18.86	22.65	27.24	32.72		
	P		2.75	2.92	3.04	3.12	3.16	3.16	3.13	3.05		
	Q	20℃	9.36	11.09	13.27	15.98	19.34	23.43	28.37			
	P		2.44	2.63	2.78	2.88	2.94	2.95	2.92			
	Q	15℃	9.15	11	13.34	16.27	19.9	24.31				
	P		2.19	2.42	2.59	2.72	2.79	2.82				
	Q	10℃	8.96	10.94	13.46	16.63	20.53	25.28				
	P		2.01	2.27	2.48	2.63	2.72	2.76				
WW81KR-TFD-GN1	Q	65℃							26.22	29.53	33.51	
	P								8.86	8.91	8.96	
	Q	60℃						23.31	26.31	29.93	34.27	39.46
	P							7.86	7.88	7.9	7.91	7.93
	Q	55℃					20.6	23.3	26.57	30.51	35.24	40.87
	P						6.98	6.99	6.99	6.98	6.97	6.95
	Q	50℃				18.07	20.5	23.43	26.99	31.27	36.4	42.49
	P					6.2	6.21	6.21	6.2	6.17	6.12	6.07
	Q	45℃			15.72	17.9	20.52	23.7	27.56	32.2	37.76	44.33
	P				5.47	5.51	5.53	5.52	5.49	5.44	5.38	5.29
	Q	40℃		13.56	15.5	17.83	20.66	24.1	28.28	33.31	39.31	46.39
	P			4.78	4.86	4.91	4.93	4.92	4.88	4.81	4.73	4.62
	Q	35℃	11.57	13.3	15.35	17.84	20.9	24.63	29.16	34.59	41.05	48.65
	P		4.1	4.23	4.33	4.39	4.41	4.4	4.36	4.28	4.18	4.05
	Q	30℃	11.28	13.08	15.26	17.94	21.25	25.29	30.18	36.04	42.98	
	P		3.6	3.76	3.87	3.95	3.98	3.97	3.93	3.85	3.73	
	Q	25℃	11.02	12.9	15.23	18.13	21.7	26.06	31.34	37.64		
	P		3.16	3.36	3.5	3.59	3.64	3.64	3.6	3.51		
	Q	20℃	10.77	12.76	15.26	18.39	22.25	26.96	32.64			
	P		2.81	3.03	3.2	3.32	3.38	3.39	3.36			
	Q	15℃	10.53	12.66	15.35	18.72	22.89	27.97				
	P		2.52	2.78	2.99	3.13	3.21	3.24				
	Q	10℃	10.31	12.59	15.49	19.13	23.62	29.09				
	P		2.31	2.61	2.85	3.02	3.13	3.18				

注：以上数据基于 11.1K 吸气过热度，8.3K 过冷度
Note: The above data are based on 11.1K superheating and 8.3K subcooling

制热量 Heating Capacity R32

型号 Model	项目 Item (KW)	Tc\Te	-25℃	-20℃	-15℃	-10℃	-5℃	0℃	5℃	10℃	15℃	20℃
WW94KR-TFD-GN1	Q	65℃							30.5	34.35	38.98	
	P								10.3	10.36	10.42	
	Q	60℃						27.12	30.61	34.81	39.87	45.9
	P							9.14	9.17	9.19	9.21	9.23
	Q	55℃					23.96	27.11	30.91	35.49	40.99	47.54
	P						8.12	8.13	8.13	8.12	8.11	8.08
	Q	50℃				21.02	23.85	27.26	31.39	36.37	42.34	49.43
	P					7.21	7.23	7.23	7.21	7.17	7.12	7.06
	Q	45℃			18.29	20.82	23.87	27.57	32.06	37.46	43.92	51.57
	P				6.37	6.41	6.43	6.42	6.39	6.33	6.25	6.16
	Q	40℃		15.77	18.03	20.74	24.03	28.04	32.9	38.75	45.73	53.96
	P			5.56	5.65	5.71	5.73	5.72	5.67	5.6	5.5	5.37
	Q	35℃	13.46	15.47	17.85	20.75	24.31	28.65	33.92	40.24	47.75	56.59
	P		4.77	4.92	5.03	5.1	5.13	5.12	5.07	4.98	4.86	4.71
	Q	30℃	13.13	15.21	17.75	20.87	24.72	29.42	35.1	41.92	49.99	
	P		4.18	4.37	4.51	4.59	4.63	4.62	4.57	4.48	4.34	
	Q	25℃	12.81	15.01	17.72	21.08	25.24	30.32	36.46	43.79		
	P		3.68	3.9	4.07	4.18	4.23	4.23	4.18	4.09		
	Q	20℃	12.52	14.85	17.76	21.39	25.88	31.36	37.97			
	P		3.26	3.53	3.72	3.86	3.93	3.95	3.91			
	Q	15℃	12.25	14.73	17.86	21.78	26.63	32.53				
	P		2.93	3.24	3.47	3.64	3.74	3.77				
	Q	10℃	11.99	14.64	18.02	22.25	27.48	33.84				
	P		2.68	3.04	3.31	3.52	3.64	3.7				
WW108KR-TFD-GN1	Q	65℃							33.59	37.83	42.93	
	P								11.35	11.41	11.48	
	Q	60℃						29.87	33.71	38.34	43.9	50.56
	P							10.07	10.1	10.12	10.14	10.16
	Q	55℃					26.39	29.85	34.04	39.08	45.14	52.36
	P						8.94	8.96	8.96	8.95	8.93	8.9
	Q	50℃				23.15	26.26	30.02	34.57	40.06	46.63	54.44
	P					7.94	7.96	7.96	7.94	7.9	7.84	7.78
	Q	45℃			20.14	22.93	26.29	30.37	35.3	41.26	48.37	56.8
	P				7.01	7.06	7.08	7.07	7.03	6.97	6.89	6.78
	Q	40℃		17.37	19.86	22.84	26.46	30.88	36.23	42.68	50.36	59.43
	P			6.13	6.23	6.29	6.31	6.3	6.25	6.17	6.06	5.92
	Q	35℃	14.83	17.03	19.66	22.86	26.77	31.56	37.36	44.32	52.59	62.33
	P		5.25	5.42	5.54	5.62	5.65	5.64	5.58	5.49	5.36	5.19
	Q	30℃	14.46	16.75	19.55	22.99	27.22	32.4	38.66	46.17	55.06	
	P		4.61	4.81	4.96	5.06	5.1	5.09	5.03	4.93	4.78	
	Q	25℃	14.11	16.53	19.51	23.22	27.8	33.39	40.15	48.22		
	P		4.05	4.3	4.48	4.6	4.66	4.66	4.61	4.5		
	Q	20℃	13.79	16.35	19.56	23.56	28.5	34.54	41.82			
	P		3.59	3.88	4.1	4.25	4.33	4.35	4.3			
	Q	15℃	13.49	16.22	19.67	23.99	29.32	35.83				
	P		3.23	3.57	3.82	4.01	4.12	4.15				
	Q	10℃	13.21	16.13	19.84	24.51	30.26	37.27				
	P		2.96	3.35	3.65	3.87	4.01	4.07				

注：以上数据基于 11.1K 吸气过热度，8.3K 过冷度
Note: The above data are based on 11.1K superheating and 8.3K subcooling

Heating Capacity R32 制热量

型号 Model	项目 Item (KW)	Tc\Te	-25℃	-20℃	-15℃	-10℃	-5℃	0℃	5℃	10℃	15℃	20℃
WW120KR-TFD-GN1	Q	65℃							34.79	39.21	44.47	
	P								12	12.08	12.13	
	Q	60℃						30.88	34.93	39.73	45.44	52.24
	P							10.66	10.71	10.71	10.66	10.56
	Q	55℃					27.23	30.94	35.32	40.53	46.75	54.13
	P						9.48	9.54	9.54	9.47	9.33	9.13
	Q	50℃				23.8	27.2	31.2	35.95	41.62	48.37	56.37
	P					8.38	8.5	8.54	8.49	8.36	8.14	7.85
	Q	45℃			20.54	23.68	27.33	31.66	36.82	42.98	50.31	58.96
	P				7.27	7.51	7.63	7.65	7.57	7.38	7.1	6.72
	Q	40℃		17.43	20.34	23.68	27.61	32.3	37.91	44.61	52.55	61.9
	P			6.09	6.48	6.73	6.86	6.87	6.76	6.54	6.19	5.74
	Q	35℃	14.41	17.13	20.19	23.77	28.03	33.12	39.22	46.49	55.08	65.17
	P		4.74	5.32	5.76	6.05	6.2	6.21	6.08	5.82	5.43	4.91
	Q	30℃	14.01	16.84	20.1	23.96	28.58	34.12	40.74	48.61	57.9	
	P		3.96	4.62	5.12	5.45	5.63	5.65	5.51	5.23	4.8	
	Q	25℃	13.59	16.57	20.06	24.24	29.25	35.27	42.46	50.98		
	P		3.25	4	4.56	4.95	5.16	5.2	5.07	4.77		
	Q	20℃	13.12	16.29	20.06	24.58	30.04	36.58	44.37			
	P		2.6	3.44	4.08	4.53	4.79	4.86	4.74			
	Q	15℃	12.61	16	20.08	25	30.93	38.03				
	P		2.01	2.95	3.68	4.2	4.52	4.62				
	Q	10℃	12.03	15.7	20.12	25.48	31.92	39.61				
	P		1.48	2.54	3.36	3.97	4.34	4.5				
WW144KR-TFD-GN1	Q	65℃							43.13	48.58	55.13	
	P								14.57	14.65	14.74	
	Q	60℃						38.35	43.29	49.23	56.38	64.92
	P							12.93	12.96	12.99	13.02	13.05
	Q	55℃					33.88	38.34	43.71	50.19	57.96	67.23
	P						11.49	11.5	11.5	11.49	11.47	11.43
	Q	50℃				29.72	33.73	38.55	44.39	51.44	59.88	69.9
	P					10.19	10.22	10.22	10.19	10.14	10.07	9.98
	Q	45℃			25.87	29.45	33.76	38.99	45.34	52.98	62.12	72.93
	P				9	9.07	9.09	9.08	9.03	8.95	8.84	8.71
	Q	40℃		22.31	25.5	29.33	33.98	39.65	46.53	54.81	64.67	76.31
	P			7.87	8	8.08	8.1	8.09	8.02	7.92	7.78	7.6
	Q	35℃	19.04	21.87	25.25	29.35	34.38	40.52	47.97	56.91	67.53	80.03
	P		6.74	6.96	7.12	7.22	7.26	7.24	7.17	7.05	6.88	6.66
	Q	30℃	18.56	21.51	25.1	29.52	34.95	41.6	49.65	59.28	70.7	
	P		5.91	6.18	6.37	6.49	6.55	6.54	6.46	6.33	6.14	
	Q	25℃	18.12	21.22	25.06	29.82	35.7	42.88	51.56	61.93		
	P		5.21	5.52	5.75	5.91	5.98	5.99	5.92	5.78		
	Q	20℃	17.71	21	25.11	30.25	36.6	44.35	53.7			
	P		4.62	4.99	5.27	5.46	5.56	5.58	5.52			
	Q	15℃	17.33	20.83	25.25	30.8	37.66	46.01				
	P		4.15	4.58	4.91	5.15	5.28	5.33				
	Q	10℃	16.96	20.71	25.48	31.47	38.86	47.85				
	P		3.8	4.3	4.69	4.97	5.15	5.23				

注：以上数据基于 11.1K 吸气过热度，8.3K 过冷度
Note: The above data are based on 11.1K superheating and 8.3K subcooling

制热量 Heating Capacity R32

型号 Model	项目 Item (KW)	Tc\Te	-25℃	-20℃	-15℃	-10℃	-5℃	0℃	5℃	10℃	15℃	20℃
WW154KR-TFD-GN1	Q	65℃							48.6	54.74	62.12	
	P								16.42	16.51	16.6	
	Q	60℃						43.21	48.77	55.47	63.53	73.15
	P							14.57	14.61	14.64	14.67	14.7
	Q	55℃					38.18	43.2	49.25	56.55	65.31	75.75
	P						12.94	12.96	12.96	12.95	12.92	12.88
	Q	50℃				33.49	38	43.44	50.02	57.96	67.47	78.77
	P					11.48	11.52	11.51	11.49	11.43	11.35	11.25
	Q	45℃			29.14	33.18	38.04	43.94	51.08	59.7	69.99	82.18
	P				10.14	10.22	10.25	10.23	10.18	10.09	9.96	9.81
	Q	40℃		25.13	28.73	33.04	38.29	44.68	52.43	61.75	72.87	85.99
	P			8.86	9.01	9.1	9.13	9.11	9.04	8.92	8.76	8.56
	Q	35℃	21.45	24.65	28.45	33.07	38.74	45.66	54.05	64.12	76.09	90.18
	P		7.59	7.84	8.02	8.13	8.18	8.16	8.08	7.94	7.75	7.51
	Q	30℃	20.92	24.24	28.28	33.26	39.39	46.87	55.94	66.8	79.67	
	P		6.66	6.96	7.18	7.32	7.38	7.37	7.28	7.13	6.92	
	Q	25℃	20.42	23.91	28.24	33.6	40.22	48.31	58.09	69.78		
	P		5.87	6.22	6.48	6.66	6.74	6.74	6.67	6.51		
	Q	20℃	19.96	23.66	28.3	34.08	41.24	49.97	60.5			
	P		5.2	5.62	5.93	6.15	6.27	6.29	6.22			
	Q	15℃	19.52	23.47	28.46	34.71	42.43	51.84				
	P		4.67	5.16	5.53	5.8	5.95	6.01				
	Q	10℃	19.11	23.33	28.71	35.46	43.79	53.92				
	P		4.28	4.84	5.28	5.6	5.81	5.89				
WW170KR-TFD-GN1	Q	65℃							56.79	63.96	72.58	
	P								19.19	19.29	19.4	
	Q	60℃						50.49	56.99	64.82	74.23	85.47
	P							17.02	17.07	17.11	17.14	17.18
	Q	55℃					44.61	50.47	57.54	66.07	76.31	88.51
	P						15.12	15.14	15.15	15.13	15.1	15.05
	Q	50℃				39.13	44.4	50.76	58.44	67.72	78.83	92.03
	P					13.42	13.45	13.45	13.42	13.35	13.26	13.15
	Q	45℃			34.05	38.77	44.45	51.34	59.69	69.75	81.78	96.02
	P				11.85	11.94	11.97	11.95	11.89	11.79	11.64	11.46
	Q	40℃		29.37	33.57	38.61	44.74	52.2	61.26	72.15	85.14	100.47
	P			10.36	10.53	10.63	10.67	10.65	10.56	10.43	10.24	10
	Q	35℃	25.07	28.8	33.24	38.64	45.26	53.35	63.15	74.92	88.91	105.37
	P		8.87	9.17	9.37	9.5	9.55	9.53	9.44	9.28	9.05	8.77
	Q	30℃	24.44	28.32	33.05	38.86	46.02	54.77	65.36	78.05	93.08	
	P		7.79	8.14	8.39	8.55	8.62	8.61	8.51	8.34	8.09	
	Q	25℃	23.86	27.94	32.99	39.26	46.99	56.45	67.88	81.53		
	P		6.85	7.27	7.58	7.78	7.88	7.88	7.79	7.61		
	Q	20℃	23.32	27.64	33.06	39.82	48.18	58.39	70.69			
	P		6.08	6.57	6.93	7.18	7.32	7.35	7.27			
	Q	15℃	22.81	27.42	33.25	40.55	49.58	60.58				
	P		5.46	6.03	6.47	6.77	6.96	7.02				
	Q	10℃	22.33	27.26	33.55	41.43	51.17	63				
	P		5	5.66	6.17	6.55	6.78	6.89				

注：以上数据基于 11.1K 吸气过热度，8.3K 过冷度
Note: The above data are based on 11.1K superheating and 8.3K subcooling

Heating Capacity R32 制热量

型号 Model	项目 Item (KW)	Tc\Te	-25℃	-20℃	-15℃	-10℃	-5℃	0℃	5℃	10℃	15℃	20℃
WW235KR-TWD-GN1	Q	65℃							74.72	84.15	95.5	
	P								25.24	25.38	25.53	
	Q	60℃						66.43	74.98	85.28	97.67	112.46
	P							22.4	22.46	22.51	22.55	22.6
	Q	55℃					58.69	66.41	75.71	86.94	100.41	116.46
	P						19.9	19.93	19.93	19.9	19.86	19.8
	Q	50℃				51.49	58.42	66.78	76.9	89.11	103.73	121.09
	P					17.66	17.7	17.7	17.66	17.57	17.45	17.3
	Q	45℃			44.81	51.01	58.48	67.55	78.53	91.78	107.6	126.34
	P				15.59	15.71	15.75	15.73	15.65	15.51	15.32	15.08
	Q	40℃		38.64	44.17	50.8	58.86	68.69	80.6	94.94	112.02	132.19
	P			13.63	13.85	13.99	14.04	14.01	13.9	13.72	13.47	13.16
	Q	35℃	32.98	37.89	43.73	50.85	59.56	70.2	83.1	98.58	116.99	138.64
	P		11.68	12.06	12.33	12.5	12.57	12.54	12.42	12.21	11.91	11.54
	Q	30℃	32.16	37.27	43.48	51.13	60.55	72.06	86	102.7	122.48	
	P		10.25	10.71	11.04	11.25	11.34	11.33	11.2	10.97	10.64	
	Q	25℃	31.39	36.77	43.41	51.66	61.84	74.28	89.31	107.27		
	P		9.02	9.56	9.97	10.23	10.37	10.37	10.25	10.01		
	Q	20℃	30.68	36.37	43.5	52.4	63.4	76.83	93.02			
	P		8	8.64	9.12	9.45	9.63	9.67	9.57			
	Q	15℃	30.01	36.08	43.75	53.36	65.23	79.71				
	P		7.18	7.93	8.51	8.91	9.15	9.24				
	Q	10℃	29.38	35.87	44.14	54.51	67.32	82.9				
	P		6.58	7.44	8.12	8.61	8.93	9.06				
WW292KR-TWD-GN1	Q	65℃							89.25	100.52	114.08	
	P								30.15	30.32	30.49	
	Q	60℃						79.36	89.57	101.87	116.67	134.34
	P							26.76	26.83	26.89	26.94	27
	Q	55℃					70.11	79.33	90.44	103.85	119.95	139.12
	P						23.77	23.8	23.8	23.78	23.73	23.66
	Q	50℃				61.5	69.79	79.78	91.86	106.44	123.91	144.65
	P					21.09	21.15	21.15	21.09	20.99	20.84	20.66
	Q	45℃			53.52	60.94	69.86	80.69	93.81	109.63	128.53	150.92
	P				18.63	18.76	18.81	18.79	18.69	18.53	18.3	18.02
	Q	40℃		46.16	52.76	60.69	70.32	82.05	96.28	113.41	133.82	157.91
	P			16.28	16.55	16.71	16.77	16.73	16.6	16.39	16.09	15.72
	Q	35℃	39.4	45.26	52.24	60.74	71.14	83.85	99.26	117.76	139.75	165.61
	P		13.95	14.41	14.73	14.93	15.01	14.98	14.83	14.58	14.23	13.79
	Q	30℃	38.41	44.52	51.94	61.08	72.33	86.08	102.73	122.68	146.31	
	P		12.24	12.79	13.19	13.44	13.55	13.53	13.38	13.1	12.71	
	Q	25℃	37.5	43.92	51.85	61.7	73.86	88.73	106.69	128.14		
	P		10.77	11.42	11.91	12.22	12.38	12.39	12.24	11.96		
	Q	20℃	36.65	43.45	51.96	62.59	75.73	91.77	111.12			
	P		9.55	10.32	10.9	11.29	11.51	11.55	11.43			
	Q	15℃	35.85	43.1	52.26	63.74	77.92	95.21				
	P		8.58	9.47	10.16	10.65	10.94	11.03				
	Q	10℃	35.09	42.85	52.73	65.12	80.42	99.02				
	P		7.85	8.89	9.7	10.29	10.66	10.82				

注：以上数据基于 11.1K 吸气过热度，8.3K 过冷度
Note: The above data are based on 11.1K superheating and 8.3K subcooling

制热量 Heating Capacity R454C - EVI

型号 Model	项目 Item (KW)	Tc\Te	-35℃	-30℃	-25℃	-20℃	-15℃	-10℃	-5℃	0℃	5℃	10℃	15℃	20℃	25℃
WW28KE-TFD-GV1	Q	75℃									7.47	8.49	9.64	10.9	12.28
	P										3.06	3.05	3.03	2.99	2.95
	Q	70℃							5.84	6.68	7.65	8.75	9.96	11.3	12.75
	P								2.7	2.75	2.77	2.77	2.76	2.74	2.72
	Q	65℃						5.17	5.95	6.86	7.89	9.05	10.34	11.75	13.28
	P							2.38	2.46	2.5	2.53	2.54	2.54	2.54	2.54
	Q	60℃					4.58	5.28	6.11	7.08	8.18	9.41	10.76	12.25	13.86
	P						2.07	2.18	2.25	2.3	2.33	2.35	2.37	2.38	2.4
	Q	55℃				4.06	4.67	5.42	6.32	7.34	8.51	9.81	11.24	12.8	14.5
	P					1.77	1.9	2	2.07	2.12	2.16	2.2	2.23	2.26	2.31
	Q	50℃			3.62	4.14	4.8	5.61	6.56	7.65	8.89	10.26	11.76	13.41	15.18
	P				1.48	1.63	1.75	1.84	1.92	1.98	2.03	2.07	2.12	2.18	2.25
	Q	45℃	2.99	3.26	3.68	4.25	4.97	5.84	6.85	8.01	9.31	10.75	12.33	14.06	15.92
	P		0.96	1.18	1.36	1.5	1.61	1.71	1.79	1.85	1.91	1.98	2.04	2.13	2.22
	Q	40℃	3.01	3.32	3.79	4.41	5.18	6.11	7.18	8.4	9.77	11.29	12.95	14.76	16.71
	P		0.88	1.08	1.24	1.38	1.49	1.59	1.67	1.74	1.82	1.9	1.99	2.1	2.23
	Q	35℃	3.05	3.41	3.92	4.6	5.43	6.41	7.55	8.84	10.28	11.87	13.62		
	P		0.79	0.98	1.13	1.26	1.37	1.47	1.56	1.65	1.74	1.84	1.95		
	Q	30℃	3.13	3.53	4.09	4.82	5.71	6.75	7.95	9.31	10.83	12.5			
	P		0.7	0.87	1.02	1.15	1.26	1.36	1.46	1.56	1.67	1.79			
	Q	25℃	3.23	3.68	4.29	5.07	6.02	7.13	8.4	9.83	11.42				
	P		0.6	0.76	0.9	1.03	1.14	1.25	1.36	1.47	1.6				
	Q	20℃	3.36	3.86	4.52	5.36	6.37	7.54	8.88	10.38					
	P		0.48	0.63	0.77	0.9	1.01	1.13	1.25	1.38					
WW34KE-TFD-GV1	Q	75℃									10.16	11.55	13.11	14.83	16.7
	P										4.16	4.15	4.12	4.07	4.01
	Q	70℃							7.94	9.09	10.41	11.9	13.55	15.37	17.34
	P								3.67	3.74	3.77	3.77	3.76	3.73	3.7
	Q	65℃						7.04	8.1	9.33	10.73	12.31	14.06	15.98	18.06
	P							3.24	3.34	3.41	3.44	3.46	3.46	3.45	3.45
	Q	60℃					6.23	7.18	8.31	9.63	11.12	12.79	14.64	16.66	18.85
	P						2.82	2.96	3.06	3.13	3.17	3.2	3.22	3.24	3.27
	Q	55℃				5.52	6.35	7.38	8.59	9.99	11.57	13.34	15.29	17.41	19.72
	P					2.41	2.59	2.72	2.82	2.89	2.94	2.99	3.03	3.08	3.14
	Q	50℃			4.92	5.63	6.53	7.63	8.93	10.41	12.09	13.95	16	18.23	20.65
	P				2.01	2.22	2.38	2.51	2.61	2.69	2.76	2.82	2.89	2.96	3.06
	Q	45℃	4.07	4.44	5.01	5.79	6.77	7.94	9.32	10.89	12.66	14.62	16.78	19.12	21.66
	P		1.31	1.6	1.84	2.04	2.2	2.32	2.43	2.52	2.6	2.69	2.78	2.89	3.03
	Q	40℃	4.09	4.52	5.15	6	7.05	8.31	9.77	11.43	13.29	15.36	17.62	20.08	22.73
	P		1.19	1.47	1.69	1.88	2.03	2.16	2.27	2.37	2.47	2.58	2.71	2.85	3.03
	Q	35℃	4.15	4.64	5.34	6.25	7.38	8.72	10.27	12.02	13.99	16.15	18.52		
	P		1.08	1.33	1.54	1.72	1.87	2	2.12	2.24	2.37	2.5	2.66		
	Q	30℃	4.25	4.8	5.57	6.56	7.76	9.18	10.82	12.67	14.73	17			
	P		0.95	1.19	1.39	1.56	1.71	1.85	1.99	2.12	2.27	2.43			
	Q	25℃	4.39	5	5.84	6.9	8.19	9.7	11.42	13.37	15.53				
	P		0.81	1.03	1.23	1.4	1.55	1.7	1.85	2	2.18				
	Q	20℃	4.57	5.25	6.15	7.29	8.66	10.26	12.08	14.12					
	P		0.65	0.86	1.05	1.22	1.38	1.54	1.7	1.88					

注：以上数据基于 11. 1K 吸气过热度，8. 3K 过冷度
Note: The above data are based on 11.1K superheating and 8.3K subcooling

Heating Capacity R454C - EVI 制热量

型号 Model	项目 Item (KW)	Tc\Te	-35℃	-30℃	-25℃	-20℃	-15℃	-10℃	-5℃	0℃	5℃	10℃	15℃	20℃	25℃
WW48KE-TFD-GV1	Q	75℃									15.49	17.06	18.86	20.92	23.22
	P										5.72	5.77	5.82	5.87	5.92
	Q	70℃							12.35	13.62	15.11	16.85	18.83	21.06	23.55
	P								4.97	5.03	5.09	5.15	5.21	5.27	5.34
	Q	65℃						10.72	11.9	13.31	14.96	16.86	19	21.41	24.09
	P							4.36	4.43	4.5	4.57	4.64	4.71	4.78	4.85
	Q	60℃					9.27	10.35	11.67	13.22	15.02	17.07	19.38	21.96	24.81
	P						3.81	3.9	3.98	4.06	4.14	4.21	4.29	4.37	4.46
	Q	55℃				8.02	9	10.2	11.65	13.34	15.28	17.47	19.94	22.68	25.7
	P					3.33	3.43	3.52	3.61	3.7	3.78	3.87	3.95	4.05	4.14
	Q	50℃			6.99	7.84	8.93	10.25	11.82	13.64	15.71	18.05	20.66	23.56	26.74
	P				2.9	3.01	3.12	3.22	3.31	3.4	3.5	3.59	3.68	3.78	3.88
	Q	45℃	5.68	6.19	6.92	7.87	9.06	10.49	12.17	14.1	16.31	18.78	21.54	24.59	27.93
	P		2.36	2.5	2.63	2.75	2.86	2.96	3.06	3.16	3.26	3.36	3.46	3.56	3.68
	Q	40℃	5.64	6.22	7.03	8.07	9.35	10.88	12.67	14.73	17.05	19.66	22.55	25.74	29.23
	P		2.13	2.28	2.41	2.53	2.64	2.75	2.86	2.96	3.06	3.17	3.27	3.38	3.5
	Q	35℃	5.78	6.43	7.31	8.43	9.81	11.43	13.32	15.49	17.93	20.65	23.68		
	P		1.94	2.08	2.21	2.34	2.46	2.57	2.68	2.78	2.89	3	3.11		
	Q	30℃	6.09	6.8	7.75	8.95	10.4	12.11	14.1	16.37	18.92	21.76			
	P		1.76	1.9	2.04	2.16	2.28	2.4	2.51	2.62	2.73	2.84			
	Q	25℃	6.55	7.31	8.32	9.59	11.12	12.91	14.99	17.35	20				
	P		1.59	1.73	1.87	1.99	2.11	2.23	2.34	2.45	2.57				
	Q	20℃	7.14	7.95	9.02	10.34	11.94	13.81	15.97	18.42					
	P		1.41	1.55	1.69	1.81	1.93	2.05	2.16	2.27					
WW61KE-TFD-GV1	Q	75℃									20.01	21.83	23.92	26.31	29.02
	P										7.19	7.25	7.32	7.39	7.48
	Q	70℃							16.23	17.74	19.51	21.54	23.87	26.5	29.45
	P								6.35	6.41	6.48	6.55	6.63	6.72	6.81
	Q	65℃						14.17	15.62	17.31	19.28	21.52	24.06	26.92	30.1
	P							5.62	5.69	5.77	5.85	5.94	6.03	6.12	6.22
	Q	60℃					12.28	13.65	15.27	17.15	19.3	21.74	24.49	27.56	30.97
	P						4.96	5.04	5.13	5.21	5.31	5.4	5.5	5.6	5.7
	Q	55℃				10.59	11.88	13.4	15.18	17.22	19.55	22.18	25.12	28.4	32.02
	P					4.36	4.45	4.54	4.64	4.73	4.83	4.93	5.03	5.14	5.24
	Q	50℃			9.13	10.32	11.73	13.4	15.32	17.52	20.01	22.81	25.94	29.41	33.24
	P				3.83	3.92	4.02	4.12	4.22	4.32	4.42	4.52	4.62	4.73	4.83
	Q	45℃	7.04	7.91	8.99	10.28	11.82	13.61	15.67	18.01	20.66	23.62	26.92	30.57	34.59
	P		3.24	3.35	3.45	3.55	3.65	3.76	3.86	3.96	4.06	4.17	4.27	4.37	4.47
	Q	40℃	6.96	7.91	9.08	10.47	12.11	14.01	16.2	18.68	21.47	24.59	28.05	31.87	36.07
	P		2.92	3.03	3.14	3.24	3.35	3.45	3.56	3.66	3.76	3.86	3.96	4.05	4.15
	Q	35℃	7.12	8.13	9.37	10.85	12.59	14.6	16.89	19.5	22.42	25.68	29.29		
	P		2.66	2.78	2.89	2.99	3.1	3.2	3.3	3.4	3.5	3.59	3.68		
	Q	30℃	7.48	8.55	9.86	11.41	13.23	15.33	17.73	20.45	23.49	26.88			
	P		2.47	2.58	2.69	2.79	2.89	2.99	3.09	3.18	3.27	3.35			
	Q	25℃	8.02	9.14	10.5	12.12	14.01	16.2	18.69	21.5	24.66				
	P		2.32	2.43	2.53	2.63	2.73	2.82	2.91	2.99	3.07				
	Q	20℃	8.74	9.89	11.29	12.96	14.92	17.17	19.75	22.65					
	P		2.21	2.32	2.42	2.51	2.6	2.68	2.76	2.83					

注：以上数据基于 11. 1K 吸气过热度，8. 3K 过冷度
Note: The above data are based on 11.1K superheating and 8.3K subcooling

制热量 Heating Capacity R454C - EVI

型号 Model	项目 Item (KW)	Tc\Te	-35℃	-30℃	-25℃	-20℃	-15℃	-10℃	-5℃	0℃	5℃	10℃	15℃	20℃	25℃
WW72KE-TFD-GV1	Q	75℃									23.01	25.07	27.48	30.25	33.42
	P										8.56	8.64	8.73	8.83	8.94
	Q	70℃							18.86	20.52	22.48	24.77	27.4	30.4	33.78
	P								7.52	7.6	7.69	7.78	7.87	7.97	8.08
	Q	65℃						16.62	18.21	20.09	22.28	24.79	27.64	30.85	34.44
	P							6.65	6.74	6.84	6.93	7.02	7.12	7.22	7.33
	Q	60℃					14.52	16.07	17.88	19.98	22.38	25.09	28.15	31.57	35.36
	P						5.86	5.97	6.08	6.18	6.28	6.38	6.47	6.58	6.68
	Q	55℃				12.54	14.06	15.82	17.84	20.14	22.75	25.66	28.92	32.53	36.51
	P					5.15	5.28	5.41	5.52	5.63	5.73	5.82	5.92	6.02	6.12
	Q	50℃			10.65	12.15	13.88	15.84	18.07	20.57	23.36	26.47	29.92	33.71	37.88
	P				4.5	4.65	4.8	4.93	5.05	5.16	5.26	5.36	5.45	5.55	5.64
	Q	45℃	7.51	8.83	10.33	12.04	13.96	16.12	18.53	21.22	24.2	27.5	31.12	35.09	39.43
	P		3.68	3.89	4.08	4.24	4.4	4.53	4.65	4.76	4.87	4.96	5.05	5.14	5.23
	Q	40℃	7.04	8.56	10.26	12.16	14.27	16.61	19.21	22.08	25.24	28.7	32.5	36.64	41.15
	P		3.32	3.54	3.74	3.91	4.07	4.21	4.33	4.44	4.54	4.63	4.72	4.8	4.88
	Q	35℃	6.82	8.53	10.42	12.5	14.79	17.31	20.08	23.12	26.44	30.08	34.03		
	P		3.03	3.26	3.46	3.64	3.8	3.94	4.07	4.18	4.27	4.36	4.44		
	Q	30℃	6.82	8.71	10.77	13.02	15.48	18.17	21.11	24.31	27.79	31.58			
	P		2.8	3.03	3.24	3.43	3.59	3.73	3.85	3.96	4.05	4.13			
	Q	25℃	7.01	9.07	11.3	13.72	16.34	19.19	22.28	25.63	29.27				
	P		2.62	2.86	3.07	3.26	3.42	3.56	3.68	3.78	3.87				
	Q	20℃	7.37	9.59	11.98	14.55	17.32	20.32	23.56	27.06					
	P		2.48	2.72	2.94	3.13	3.29	3.42	3.54	3.63					
WW79KE-TFD-GV1	Q	75℃									24.72	26.91	29.55	32.66	36.29
	P										9.45	9.51	9.57	9.62	9.68
	Q	70℃							20.47	22.14	24.19	26.64	29.53	32.89	36.75
	P								8.29	8.38	8.46	8.53	8.6	8.66	8.73
	Q	65℃						18.15	19.76	21.7	24	26.7	29.83	33.42	37.5
	P							7.31	7.43	7.53	7.61	7.69	7.76	7.83	7.9
	Q	60℃					15.96	17.53	19.4	21.59	24.13	27.07	30.42	34.22	38.5
	P						6.43	6.57	6.69	6.8	6.88	6.96	7.04	7.12	7.2
	Q	55℃				13.84	15.42	17.25	19.36	21.79	24.56	27.71	31.26	35.26	39.74
	P					5.64	5.8	5.95	6.07	6.17	6.26	6.35	6.43	6.51	6.6
	Q	50℃			11.76	13.38	15.2	17.27	19.61	22.26	25.24	28.59	32.34	36.52	41.16
	P				4.91	5.1	5.27	5.41	5.54	5.64	5.74	5.83	5.91	6	6.09
	Q	45℃	8.1	9.66	11.36	13.22	15.28	17.57	20.12	22.97	26.15	29.68	33.61	37.95	42.75
	P		3.98	4.24	4.47	4.66	4.83	4.97	5.09	5.2	5.3	5.39	5.48	5.58	5.67
	Q	40℃	7.51	9.32	11.25	13.33	15.61	18.11	20.86	23.9	27.25	30.96	35.04	39.54	44.48
	P		3.62	3.88	4.1	4.29	4.46	4.6	4.73	4.84	4.94	5.03	5.13	5.22	5.33
	Q	35℃	7.21	9.25	11.4	13.69	16.17	18.86	21.8	25.01	28.52	32.38	36.61		
	P		3.33	3.58	3.8	3.99	4.16	4.3	4.42	4.53	4.64	4.73	4.83		
	Q	30℃	7.17	9.42	11.78	14.27	16.93	19.8	22.9	26.26	29.93	33.92			
	P		3.09	3.34	3.56	3.74	3.91	4.05	4.17	4.28	4.39	4.49			
	Q	25℃	7.36	9.81	12.35	15.02	17.86	20.88	24.13	27.64	31.44				
	P		2.9	3.14	3.35	3.54	3.7	3.84	3.96	4.07	4.18				
	Q	20℃	7.75	10.38	13.1	15.93	18.92	22.09	25.47	29.1					
	P		2.73	2.98	3.18	3.36	3.52	3.66	3.78	3.89					

注：以上数据基于 11.1K 吸气过热度，8.3K 过冷度
Note: The above data are based on 11.1K superheating and 8.3K subcooling

Heating Capacity R454C - EVI 制热量

型号 Model	项目 Item (KW)	Tc\Te	-35℃	-30℃	-25℃	-20℃	-15℃	-10℃	-5℃	0℃	5℃	10℃	15℃	20℃	25℃
WW94KE-TFD-GV1	Q	75℃									29.07	31.65	34.74	38.41	42.67
	P										11.11	11.18	11.25	11.32	11.38
	Q	70℃							24.07	26.03	28.44	31.32	34.72	38.67	43.21
	P								9.75	9.86	9.95	10.04	10.11	10.18	10.26
	Q	65℃						21.35	23.23	25.51	28.22	31.4	35.07	39.3	44.09
	P							8.6	8.74	8.85	8.95	9.04	9.13	9.21	9.29
	Q	60℃					18.77	20.62	22.81	25.39	28.38	31.83	35.77	40.24	45.28
	P						7.57	7.73	7.87	7.99	8.1	8.19	8.28	8.37	8.46
	Q	55℃				16.28	18.13	20.28	22.77	25.62	28.88	32.58	36.76	41.47	46.73
	P					6.63	6.82	6.99	7.13	7.26	7.36	7.46	7.56	7.66	7.76
	Q	50℃			13.82	15.73	17.88	20.31	23.06	26.17	29.68	33.62	38.03	42.94	48.4
	P				5.77	6	6.2	6.37	6.51	6.64	6.75	6.85	6.95	7.06	7.17
	Q	45℃	9.53	11.36	13.35	15.54	17.97	20.66	23.66	27.01	30.75	34.9	39.52	44.63	50.28
	P		4.68	4.99	5.25	5.48	5.68	5.84	5.99	6.12	6.23	6.34	6.45	6.56	6.67
	Q	40℃	8.83	10.95	13.22	15.68	18.36	21.3	24.53	28.1	32.05	36.4	41.21	46.49	52.3
	P		4.26	4.56	4.82	5.05	5.24	5.41	5.56	5.69	5.81	5.92	6.03	6.14	6.27
	Q	35℃	8.48	10.87	13.4	16.1	19.02	22.18	25.63	29.41	33.54	38.08	43.05		
	P		3.91	4.21	4.47	4.7	4.89	5.05	5.2	5.33	5.45	5.57	5.68		
	Q	30℃	8.43	11.08	13.85	16.78	19.91	23.28	26.93	30.89	35.19	39.89			
	P		3.63	3.93	4.18	4.4	4.59	4.76	4.9	5.04	5.16	5.28			
	Q	25℃	8.66	11.53	14.53	17.67	21	24.56	28.38	32.5	36.97				
	P		3.41	3.7	3.95	4.16	4.35	4.51	4.66	4.79	4.91				
	Q	20℃	9.11	12.21	15.4	18.73	22.25	25.97	29.95	34.22					
	P		3.22	3.5	3.74	3.96	4.14	4.3	4.44	4.58					
WW108KE-TFD-GV1	Q	75℃									33.81	36.8	40.41	44.67	49.63
	P										12.92	13.01	13.09	13.16	13.24
	Q	70℃							27.99	30.28	33.08	36.43	40.38	44.98	50.26
	P								11.34	11.47	11.58	11.67	11.76	11.84	11.93
	Q	65℃						24.83	27.02	29.67	32.82	36.51	40.79	45.7	51.28
	P							10	10.16	10.3	10.41	10.52	10.61	10.71	10.81
	Q	60℃					21.82	23.98	26.53	29.52	33	37.01	41.6	46.8	52.66
	P						8.8	8.99	9.15	9.29	9.42	9.52	9.63	9.73	9.84
	Q	55℃				18.93	21.09	23.59	26.48	29.79	33.58	37.89	42.76	48.23	54.34
	P					7.71	7.94	8.13	8.3	8.44	8.57	8.68	8.79	8.9	9.02
	Q	50℃			16.08	18.29	20.79	23.62	26.82	30.44	34.52	39.1	44.22	49.94	56.29
	P				6.71	6.98	7.21	7.4	7.57	7.72	7.85	7.97	8.09	8.21	8.33
	Q	45℃	11.08	13.21	15.53	18.08	20.89	24.03	27.52	31.42	35.76	40.59	45.96	51.9	58.47
	P		5.44	5.8	6.11	6.37	6.6	6.8	6.97	7.11	7.25	7.37	7.5	7.62	7.76
	Q	40℃	10.27	12.74	15.38	18.24	21.35	24.77	28.53	32.68	37.27	42.34	47.92	54.07	60.83
	P		4.95	5.3	5.61	5.87	6.1	6.29	6.46	6.61	6.75	6.88	7.01	7.14	7.29
	Q	35℃	9.86	12.64	15.59	18.73	22.12	25.8	29.81	34.2	39.01	44.28	50.06		
	P		4.55	4.9	5.2	5.46	5.68	5.88	6.05	6.2	6.34	6.47	6.61		
	Q	30℃	9.81	12.88	16.1	19.51	23.16	27.08	31.32	35.92	40.93	46.39			
	P		4.23	4.57	4.87	5.12	5.34	5.53	5.7	5.86	6	6.14			
	Q	25℃	10.07	13.41	16.89	20.55	24.42	28.56	33.01	37.8	42.99				
	P		3.96	4.3	4.59	4.84	5.06	5.25	5.42	5.57	5.71				
	Q	20℃	10.6	14.19	17.91	21.79	25.87	30.21	34.84	39.8					
	P		3.74	4.07	4.35	4.6	4.81	5	5.17	5.32					

注：以上数据基于 11.1K 吸气过热度，8.3K 过冷度
Note: The above data are based on 11.1K superheating and 8.3K subcooling

制热量 Heating Capacity R454C - EVI

型号 Model	项目 Item (KW)	Tc\Te	-35℃	-30℃	-25℃	-20℃	-15℃	-10℃	-5℃	0℃	5℃	10℃	15℃	20℃	25℃
WW125KE-TFD-GV1	Q	75℃									38.02	41.39	45.44	50.23	55.81
	P										14.53	14.63	14.72	14.8	14.89
	Q	70℃							31.48	34.05	37.2	40.97	45.41	50.58	56.52
	P								12.75	12.89	13.02	13.13	13.22	13.32	13.42
	Q	65℃						27.92	30.39	33.37	36.91	41.06	45.87	51.39	57.67
	P							11.25	11.43	11.58	11.71	11.83	11.93	12.04	12.15
	Q	60℃					24.54	26.96	29.83	33.2	37.12	41.63	46.78	52.63	59.22
	P						9.89	10.11	10.29	10.45	10.59	10.71	10.83	10.94	11.07
	Q	55℃				21.29	23.72	26.53	29.78	33.51	37.77	42.61	48.08	54.23	61.11
	P					8.67	8.92	9.14	9.33	9.49	9.63	9.76	9.89	10.01	10.15
	Q	50℃			18.08	20.57	23.38	26.56	30.16	34.23	38.82	43.97	49.73	56.16	63.31
	P				7.55	7.85	8.11	8.33	8.52	8.68	8.83	8.96	9.09	9.23	9.37
	Q	45℃	12.46	14.86	17.46	20.33	23.5	27.02	30.95	35.33	40.22	45.65	51.69	58.37	65.75
	P		6.12	6.52	6.87	7.17	7.42	7.64	7.83	8	8.15	8.29	8.43	8.57	8.73
	Q	40℃	11.55	14.33	17.3	20.51	24.01	27.85	32.09	36.76	41.92	47.61	53.89	60.81	68.41
	P		5.57	5.97	6.31	6.6	6.86	7.08	7.27	7.44	7.59	7.74	7.88	8.03	8.19
	Q	35℃	11.09	14.22	17.53	21.06	24.87	29.01	33.52	38.46	43.87	49.8	56.3		
	P		5.12	5.51	5.85	6.14	6.39	6.61	6.8	6.97	7.13	7.28	7.43		
	Q	30℃	11.03	14.49	18.11	21.94	26.04	30.45	35.22	40.39	46.03	52.17			
	P		4.75	5.14	5.47	5.76	6.01	6.22	6.41	6.59	6.75	6.9			
	Q	25℃	11.32	15.09	19	23.11	27.46	32.12	37.12	42.51	48.35				
	P		4.45	4.83	5.16	5.44	5.69	5.9	6.09	6.26	6.42				
	Q	20℃	11.92	15.96	20.14	24.5	29.09	33.97	39.18	44.76					
	P		4.21	4.58	4.9	5.17	5.41	5.62	5.81	5.98					
WW138KE-TFD-GV1	Q	75℃									43.68	47.54	52.2	57.7	64.11
	P										16.69	16.8	16.9	17	17.1
	Q	70℃							36.16	39.11	42.73	47.06	52.16	58.1	64.92
	P								14.64	14.81	14.95	15.08	15.19	15.3	15.42
	Q	65℃						32.07	34.91	38.33	42.4	47.17	52.69	59.04	66.25
	P							12.92	13.13	13.3	13.45	13.59	13.71	13.83	13.96
	Q	60℃					28.19	30.97	34.27	38.14	42.64	47.82	53.74	60.45	68.02
	P						11.37	11.62	11.83	12.01	12.16	12.3	12.44	12.57	12.71
	Q	55℃				24.45	27.24	30.47	34.2	38.49	43.38	48.95	55.23	62.3	70.2
	P					9.96	10.25	10.5	10.72	10.9	11.06	11.21	11.36	11.5	11.65
	Q	50℃			20.77	23.63	26.86	30.51	34.65	39.32	44.59	50.51	57.13	64.52	72.72
	P				8.67	9.02	9.31	9.57	9.78	9.97	10.14	10.29	10.45	10.6	10.77
	Q	45℃	14.31	17.07	20.06	23.35	26.99	31.04	35.55	40.59	46.2	52.44	59.37	67.05	75.53
	P		7.03	7.49	7.89	8.24	8.53	8.78	9	9.19	9.36	9.53	9.69	9.85	10.03
	Q	40℃	13.27	16.46	19.87	23.56	27.58	31.99	36.86	42.22	48.15	54.69	61.91	69.85	78.58
	P		6.39	6.85	7.25	7.59	7.88	8.13	8.35	8.54	8.72	8.89	9.06	9.23	9.41
	Q	35℃	12.74	16.33	20.13	24.19	28.57	33.33	38.51	44.18	50.39	57.21	64.67		
	P		5.88	6.33	6.72	7.05	7.34	7.59	7.81	8.01	8.19	8.36	8.53		
	Q	30℃	12.67	16.64	20.8	25.21	29.91	34.98	40.45	46.4	52.87	59.93			
	P		5.46	5.9	6.29	6.62	6.9	7.15	7.37	7.57	7.75	7.93			
	Q	25℃	13.01	17.33	21.82	26.54	31.55	36.89	42.64	48.83	55.54				
	P		5.12	5.55	5.93	6.25	6.53	6.78	7	7.19	7.38				
	Q	20℃	13.69	18.34	23.14	28.14	33.42	39.02	45	51.42					
	P		4.83	5.26	5.62	5.94	6.22	6.46	6.68	6.87					

注：以上数据基于 11. 1K 吸气过热度，8. 3K 过冷度
Note: The above data are based on 11.1K superheating and 8.3K subcooling

Heating Capacity R454C - EVI 制热量

型号 Model	项目 Item (KW)	Tc\Te	-35℃	-30℃	-25℃	-20℃	-15℃	-10℃	-5℃	0℃	5℃	10℃	15℃	20℃	25℃
WW154KE-TFD-GV1	Q	75℃									47.84	52.08	57.18	63.21	70.23
	P										18.28	18.41	18.52	18.62	18.73
	Q	70℃							39.61	42.84	46.8	51.55	57.14	63.64	71.12
	P								16.04	16.23	16.38	16.52	16.64	16.76	16.89
	Q	65℃						35.13	38.23	41.99	46.44	51.67	57.72	64.67	72.57
	P							14.15	14.38	14.57	14.74	14.88	15.02	15.15	15.29
	Q	60℃					30.88	33.93	37.54	41.78	46.7	52.38	58.86	66.22	74.51
	P						12.45	12.72	12.95	13.15	13.32	13.48	13.62	13.77	13.93
	Q	55℃				26.78	29.84	33.38	37.47	42.16	47.52	53.62	60.5	68.24	76.9
	P					10.91	11.23	11.5	11.74	11.94	12.12	12.28	12.44	12.6	12.77
	Q	50℃			22.75	25.88	29.42	33.42	37.95	43.07	48.84	55.32	62.58	70.67	79.66
	P				9.5	9.88	10.2	10.48	10.71	10.92	11.11	11.28	11.44	11.61	11.79
	Q	45℃	15.68	18.7	21.98	25.58	29.57	34	38.94	44.46	50.6	57.44	65.04	73.45	82.74
	P		7.7	8.21	8.64	9.02	9.34	9.62	9.86	10.07	10.26	10.44	10.61	10.79	10.98
	Q	40℃	14.54	18.03	21.76	25.8	30.21	35.05	40.37	46.25	52.74	59.91	67.81	76.51	86.07
	P		7	7.51	7.94	8.31	8.63	8.91	9.15	9.36	9.55	9.74	9.92	10.11	10.31
	Q	35℃	13.96	17.89	22.05	26.5	31.3	36.5	42.18	48.39	55.2	62.66	70.84		
	P		6.44	6.93	7.36	7.73	8.04	8.32	8.56	8.77	8.97	9.16	9.35		
	Q	30℃	13.88	18.23	22.79	27.61	32.77	38.31	44.31	50.83	57.92	65.65			
	P		5.98	6.47	6.88	7.25	7.56	7.83	8.07	8.29	8.49	8.68			
	Q	25℃	14.25	18.98	23.9	29.08	34.56	40.41	46.7	53.49	60.83				
	P		5.61	6.08	6.49	6.85	7.16	7.43	7.66	7.88	8.08				
	Q	20℃	15	20.09	25.34	30.83	36.61	42.74	49.29	56.32					
	P		5.29	5.76	6.16	6.51	6.81	7.08	7.31	7.53					
WW170KE-TFD-GV1	Q	75℃									56.98	62.02	68.09	75.27	83.63
	P										21.77	21.92	22.05	22.18	22.31
	Q	70℃							47.17	51.02	55.74	61.39	68.05	75.79	84.69
	P								19.1	19.32	19.51	19.67	19.82	19.96	20.11
	Q	65℃						41.84	45.53	50	55.31	61.53	68.74	77.01	86.42
	P							16.86	17.13	17.35	17.55	17.72	17.88	18.04	18.21
	Q	60℃					36.78	40.41	44.71	49.75	55.62	62.38	70.1	78.86	88.74
	P						14.83	15.15	15.43	15.66	15.87	16.05	16.23	16.4	16.58
	Q	55℃				31.9	35.54	39.75	44.62	50.21	56.59	63.85	72.05	81.27	91.58
	P					12.99	13.37	13.7	13.98	14.22	14.43	14.63	14.81	15	15.2
	Q	50℃			27.09	30.83	35.04	39.81	45.2	51.3	58.17	65.89	74.53	84.16	94.87
	P				11.31	11.76	12.15	12.48	12.76	13.01	13.23	13.43	13.63	13.83	14.04
	Q	45℃	18.67	22.27	26.17	30.46	35.21	40.49	46.38	52.94	60.26	68.41	77.45	87.47	98.53
	P		9.17	9.77	10.3	10.74	11.13	11.45	11.74	11.99	12.22	12.43	12.64	12.85	13.08
	Q	40℃	17.31	21.47	25.92	30.73	35.98	41.74	48.08	55.08	62.81	71.34	80.76	91.12	102.5
	P		8.34	8.94	9.45	9.9	10.28	10.61	10.89	11.15	11.38	11.6	11.81	12.04	12.28
	Q	35℃	16.62	21.31	26.26	31.56	37.27	43.47	50.24	57.63	65.74	74.62	84.37		
	P		7.67	8.26	8.76	9.2	9.58	9.91	10.19	10.45	10.68	10.91	11.13		
	Q	30℃	16.53	21.71	27.14	32.88	39.02	45.63	52.77	60.53	68.97	78.18			
	P		7.12	7.7	8.2	8.63	9	9.33	9.61	9.87	10.11	10.34			
	Q	25℃	16.97	22.61	28.47	34.63	41.16	48.13	55.62	63.7	72.45				
	P		6.68	7.24	7.73	8.16	8.52	8.84	9.13	9.39	9.63				
	Q	20℃	17.86	23.92	30.18	36.72	43.6	50.9	58.7	67.07					
	P		6.3	6.86	7.34	7.75	8.11	8.43	8.71	8.97					

注：以上数据基于 11. 1K 吸气过热度，8. 3K 过冷度
Note: The above data are based on 11.1K superheating and 8.3K subcooling

制热量 Heating Capacity R454C - EVI

型号 Model	项目 Item (KW)	Tc\Te	-35℃	-30℃	-25℃	-20℃	-15℃	-10℃	-5℃	0℃	5℃	10℃	15℃	20℃	25℃
WW250KE-TWD-GV1	Q	75℃									74.4	80.98	88.91	98.29	109.2
	P										28.43	28.62	28.79	28.96	29.13
	Q	70℃							61.6	66.62	72.78	80.16	88.85	98.97	110.59
	P								24.94	25.23	25.47	25.68	25.88	26.06	26.26
	Q	65℃						54.63	59.46	65.29	72.22	80.34	89.76	100.56	112.84
	P							22.01	22.36	22.66	22.91	23.14	23.35	23.56	23.78
	Q	60℃					48.02	52.76	58.38	64.96	72.62	81.45	91.53	102.97	115.87
	P						19.36	19.78	20.14	20.45	20.72	20.96	21.19	21.41	21.65
	Q	55℃				41.65	46.4	51.91	58.26	65.56	73.9	83.37	94.08	106.12	119.58
	P					16.96	17.46	17.89	18.25	18.57	18.85	19.1	19.34	19.59	19.85
	Q	50℃			35.38	40.25	45.75	51.98	59.02	66.98	75.95	86.03	97.31	109.89	123.87
	P				14.77	15.36	15.86	16.29	16.66	16.98	17.27	17.54	17.79	18.06	18.34
	Q	45℃	24.38	29.07	34.17	39.77	45.97	52.87	60.56	69.13	78.69	89.32	101.13	114.21	128.66
	P		11.97	12.76	13.44	14.03	14.53	14.96	15.33	15.66	15.95	16.23	16.5	16.78	17.08
	Q	40℃	22.6	28.03	33.84	40.13	46.98	54.5	62.78	71.92	82.01	93.16	105.45	118.98	133.85
	P		10.89	11.67	12.35	12.92	13.42	13.85	14.22	14.55	14.86	15.14	15.42	15.72	16.03
	Q	35℃	21.7	27.82	34.29	41.21	48.67	56.77	65.59	75.25	85.84	97.44	110.16		
	P		10.01	10.78	11.44	12.02	12.51	12.93	13.31	13.64	13.95	14.24	14.54		
	Q	30℃	21.58	28.35	35.43	42.94	50.95	59.58	68.91	79.04	90.06	102.08			
	P		9.3	10.05	10.71	11.27	11.75	12.18	12.55	12.89	13.2	13.5			
	Q	25℃	22.15	29.52	37.17	45.21	53.74	62.84	72.62	83.18	94.6				
	P		8.72	9.46	10.1	10.65	11.13	11.55	11.92	12.25	12.57				
	Q	20℃	23.32	31.23	39.41	47.94	56.93	66.47	76.65	87.58					
	P		8.23	8.95	9.58	10.12	10.59	11.01	11.37	11.71					
WW300KE-TWD-GV1	Q	75℃									91.57	99.67	109.43	120.97	134.4
	P										34.99	35.23	35.44	35.64	35.85
	Q	70℃							75.81	82	89.58	98.66	109.36	121.8	136.11
	P								30.7	31.05	31.35	31.61	31.85	32.08	32.32
	Q	65℃						67.23	73.18	80.35	88.88	98.88	110.47	123.76	138.88
	P							27.09	27.52	27.89	28.2	28.48	28.74	29	29.27
	Q	60℃					59.1	64.93	71.85	79.96	89.38	100.24	112.65	126.74	142.61
	P						23.83	24.35	24.79	25.17	25.5	25.79	26.07	26.36	26.65
	Q	55℃				51.26	57.11	63.89	71.71	80.69	90.95	102.61	115.79	130.6	147.17
	P					20.87	21.49	22.02	22.47	22.85	23.2	23.51	23.81	24.11	24.43
	Q	50℃			43.54	49.54	56.31	63.97	72.64	82.44	93.48	105.88	119.77	135.25	152.46
	P				18.18	18.91	19.52	20.05	20.51	20.9	21.26	21.58	21.9	22.22	22.57
	Q	45℃	30.01	35.78	42.06	48.95	56.58	65.07	74.53	85.08	96.85	109.94	124.47	140.57	158.35
	P		14.73	15.71	16.55	17.26	17.88	18.41	18.87	19.27	19.63	19.97	20.31	20.65	21.02
	Q	40℃	27.82	34.5	41.65	49.38	57.82	67.07	77.27	88.52	100.94	114.66	129.78	146.43	164.73
	P		13.41	14.37	15.19	15.91	16.52	17.04	17.5	17.91	18.28	18.64	18.98	19.35	19.73
	Q	35℃	26.71	34.24	42.21	50.72	59.9	69.87	80.73	92.62	105.65	119.93	135.58		
	P		12.32	13.27	14.09	14.79	15.39	15.92	16.38	16.79	17.17	17.53	17.89		
	Q	30℃	26.56	34.89	43.61	52.85	62.71	73.33	84.81	97.28	110.85	125.64			
	P		11.45	12.37	13.18	13.87	14.47	14.99	15.45	15.86	16.25	16.62			
	Q	25℃	27.27	36.33	45.75	55.65	66.14	77.35	89.38	102.37	116.43				
	P		10.73	11.64	12.43	13.11	13.7	14.21	14.67	15.08	15.47				
	Q	20℃	28.71	38.44	48.5	59	70.07	81.81	94.34	107.79					
	P		10.13	11.02	11.79	12.46	13.04	13.54	14	14.41					

注：以上数据基于 11.1K 吸气过热度，8.3K 过冷度
Note: The above data are based on 11.1K superheating and 8.3K subcooling

Heating Capacity R455A - EVI 制热量

型号 Model	项目 Item (KW)	Tc\Te	-35℃	-30℃	-25℃	-20℃	-15℃	-10℃	-5℃	0℃	5℃	10℃	15℃	20℃	25℃
WW28KE-TFD-GV1	Q	72℃									8.06	9.29	10.67	12.21	13.9
	P										2.84	2.86	2.88	2.89	2.89
	Q	70℃									8.13	9.39	10.8	12.37	14.1
	P										2.75	2.78	2.79	2.81	2.81
	Q	65℃							6.15	7.17	8.35	9.69	11.18	12.84	14.67
	P								2.46	2.5	2.54	2.57	2.6	2.61	2.62
	Q	60℃						5.36	6.29	7.38	8.63	10.04	11.62	13.38	15.31
	P							2.19	2.25	2.3	2.35	2.39	2.41	2.43	2.44
	Q	55℃					4.66	5.5	6.49	7.64	8.96	10.46	12.13	13.98	16.03
	P						1.92	1.99	2.06	2.12	2.17	2.21	2.24	2.26	2.27
	Q	50℃			3.5	4.07	4.79	5.68	6.73	7.96	9.36	10.94	12.7	14.66	16.81
	P				1.54	1.64	1.73	1.81	1.89	1.95	2.01	2.05	2.08	2.1	2.11
	Q	45℃		3.14	3.58	4.19	4.96	5.91	7.02	8.32	9.8	11.48	13.34	15.4	17.67
	P			1.25	1.36	1.47	1.57	1.66	1.74	1.8	1.86	1.91	1.94	1.95	1.95
	Q	40℃	2.9	3.21	3.7	4.35	5.17	6.17	7.36	8.74	10.3	12.07	14.04	16.21	18.6
	P		0.95	1.08	1.21	1.32	1.43	1.52	1.6	1.67	1.73	1.77	1.8	1.81	1.8
	Q	35℃	2.96	3.31	3.83	4.53	5.41	6.48	7.74	9.2	10.86	12.72			
	P		0.8	0.95	1.08	1.2	1.31	1.4	1.48	1.55	1.61	1.65			
	Q	30℃	3.05	3.43	4	4.75	5.69	6.83	8.16						
	P		0.69	0.83	0.97	1.09	1.21	1.3	1.38						
	Q	25℃	3.15	3.58	4.19	4.99									
	P		0.6	0.75	0.89	1.01									
	Q	20℃	3.27												
	P		0.53												
WW34KE-TFD-GV1	Q	72℃									10.97	12.64	14.52	16.6	18.9
	P										3.87	3.89	3.91	3.93	3.93
	Q	70℃									11.06	12.78	14.7	16.83	19.18
	P										3.74	3.78	3.8	3.82	3.82
	Q	65℃							8.36	9.76	11.36	13.17	15.21	17.46	19.95
	P								3.34	3.4	3.46	3.5	3.53	3.56	3.57
	Q	60℃						7.29	8.56	10.04	11.74	13.66	15.81	18.19	20.82
	P							2.98	3.06	3.13	3.19	3.24	3.28	3.31	3.32
	Q	55℃					6.34	7.48	8.83	10.4	12.19	14.23	16.5	19.02	21.8
	P						2.61	2.71	2.8	2.88	2.95	3.01	3.05	3.08	3.09
	Q	50℃			4.77	5.54	6.52	7.73	9.16	10.82	12.73	14.88	17.28	19.94	22.87
	P				2.1	2.23	2.35	2.47	2.57	2.66	2.73	2.79	2.84	2.86	2.87
	Q	45℃		4.27	4.88	5.7	6.75	8.03	9.56	11.32	13.34	15.61	18.15	20.95	24.04
	P			1.7	1.85	2	2.13	2.25	2.36	2.45	2.53	2.59	2.63	2.66	2.66
	Q	40℃	3.94	4.37	5.03	5.91	7.03	8.4	10.01	11.88	14.02	16.42	19.09	22.05	25.3
	P		1.29	1.47	1.64	1.8	1.94	2.07	2.18	2.27	2.35	2.41	2.44	2.46	2.45
	Q	35℃	4.03	4.51	5.21	6.17	7.36	8.82	10.53	12.51	14.77	17.3			
	P		1.09	1.29	1.46	1.63	1.78	1.91	2.02	2.11	2.19	2.24			
	Q	30℃	4.15	4.67	5.44	6.46	7.74	9.29	11.11						
	P		0.93	1.14	1.32	1.49	1.64	1.77	1.88						
	Q	25℃	4.29	4.86	5.7	6.79									
	P		0.81	1.02	1.21	1.38									
	Q	20℃	4.45												
	P		0.72												

注：以上数据基于 11.1K 吸气过热度，8.3K 过冷度
Note: The above data are based on 11.1K superheating and 8.3K subcooling

制热量 Heating Capacity R455A - EVI

型号 Model	项目 Item (KW)	Tc\Te	-35℃	-30℃	-25℃	-20℃	-15℃	-10℃	-5℃	0℃	5℃	10℃	15℃	20℃	25℃
WW48KE-TFD-GV1	Q	72℃									14.66	17.06	19.78	22.8	26.14
	P										5.4	5.53	5.66	5.77	5.87
	Q	70℃									14.75	17.18	19.93	22.99	26.37
	P										5.19	5.32	5.44	5.54	5.63
	Q	65℃							10.97	12.85	15.05	17.56	20.4	23.55	27.02
	P								4.44	4.57	4.7	4.81	4.91	5	5.07
	Q	60℃						9.56	11.19	13.16	15.45	18.06	20.99	24.23	27.79
	P							3.89	4.02	4.14	4.25	4.35	4.43	4.5	4.56
	Q	55℃					8.39	9.79	11.51	13.57	15.95	18.66	21.68	25.03	28.68
	P						3.4	3.53	3.64	3.75	3.84	3.93	4	4.05	4.09
	Q	50℃			6.65	7.46	8.61	10.1	11.93	14.08	16.56	19.37	22.5	25.94	29.7
	P				2.84	2.97	3.09	3.2	3.3	3.4	3.48	3.55	3.6	3.64	3.67
	Q	45℃		6.2	6.76	7.67	8.92	10.51	12.44	14.69	17.28	20.19	23.42	26.97	30.85
	P			2.46	2.58	2.7	2.81	2.91	3	3.08	3.15	3.21	3.25	3.28	3.29
	Q	40℃	5.97	6.29	6.95	7.97	9.32	11.01	13.04	15.4	18.1	21.12	24.46	28.13	32.11
	P		2.12	2.24	2.35	2.46	2.56	2.65	2.73	2.81	2.87	2.91	2.94	2.96	2.96
	Q	35℃	6.04	6.46	7.23	8.34	9.8	11.61	13.74	16.22	19.02	22.16			
	P		1.93	2.04	2.15	2.25	2.35	2.43	2.5	2.57	2.62	2.65			
	Q	30℃	6.17	6.7	7.58	8.8	10.38	12.29	14.54						
	P		1.77	1.88	1.98	2.08	2.16	2.24	2.31						
	Q	25℃	6.37	7.01	8	9.35									
	P		1.64	1.75	1.84	1.93									
	Q	20℃	6.64												
	P		1.54												
WW61KE-TFD-GV1	Q	72℃									19.13	22.05	25.28	28.84	32.73
	P										6.9	7.05	7.18	7.28	7.35
	Q	70℃									19.24	22.18	25.45	29.06	32.99
	P										6.63	6.77	6.89	6.98	7.05
	Q	65℃							14.49	16.85	19.55	22.59	25.97	29.68	33.74
	P								5.67	5.84	5.98	6.11	6.21	6.28	6.34
	Q	60℃						12.64	14.74	17.18	19.97	23.11	26.6	30.44	34.63
	P							4.97	5.13	5.27	5.39	5.5	5.58	5.64	5.69
	Q	55℃					11.06	12.88	15.06	17.6	20.5	23.75	27.37	31.34	35.67
	P						4.34	4.49	4.63	4.75	4.86	4.94	5.01	5.07	5.11
	Q	50℃			8.59	9.76	11.3	13.2	15.48	18.12	21.13	24.52	28.27	32.39	36.87
	P				3.64	3.8	3.94	4.07	4.18	4.29	4.37	4.45	4.51	4.55	4.59
	Q	45℃		7.88	8.74	9.99	11.61	13.61	16	18.75	21.89	25.41	29.31	33.58	38.24
	P			3.19	3.34	3.47	3.58	3.69	3.78	3.87	3.94	4	4.06	4.1	4.13
	Q	40℃	7.46	8.01	8.96	10.29	12.01	14.12	16.62	19.5	22.78	26.44	30.5	34.94	39.77
	P		2.84	2.96	3.07	3.17	3.27	3.35	3.43	3.5	3.56	3.62	3.66	3.7	3.74
	Q	35℃	7.58	8.21	9.24	10.67	12.5	14.73	17.35	20.38	23.8	27.62			
	P		2.67	2.76	2.84	2.92	3	3.06	3.13	3.18	3.24	3.29			
	Q	30℃	7.75	8.47	9.6	11.14	13.09	15.44	18.21						
	P		2.53	2.59	2.65	2.71	2.77	2.82	2.87						
	Q	25℃	7.98	8.81	10.05	11.7									
	P		2.42	2.46	2.5	2.54									
	Q	20℃	8.29												
	P		2.34												

注：以上数据基于 11.1K 吸气过热度，8.3K 过冷度
Note: The above data are based on 11.1K superheating and 8.3K subcooling

Heating Capacity R455A - EVI 制热量

型号 Model	项目 Item (KW)	Tc\Te	-35℃	-30℃	-25℃	-20℃	-15℃	-10℃	-5℃	0℃	5℃	10℃	15℃	20℃	25℃
WW72KE-TFD-GV1	Q	72℃									22.08	25.34	28.99	33.04	37.49
	P										8.17	8.35	8.49	8.59	8.65
	Q	70℃									22.2	25.5	29.19	33.27	37.75
	P										7.85	8.02	8.15	8.23	8.28
	Q	65℃							16.98	19.59	22.6	26	29.79	33.97	38.54
	P								6.72	6.93	7.1	7.23	7.33	7.39	7.42
	Q	60℃						14.94	17.28	20.02	23.14	26.66	30.56	34.85	39.52
	P							5.89	6.09	6.27	6.41	6.51	6.59	6.63	6.63
	Q	55℃					13.13	15.22	17.7	20.57	23.83	27.47	31.49	35.9	40.69
	P						5.15	5.35	5.52	5.66	5.77	5.85	5.91	5.93	5.92
	Q	50℃			10.03	11.5	13.36	15.61	18.24	21.26	24.66	28.44	32.6	37.14	42.05
	P				4.28	4.5	4.69	4.86	5	5.11	5.2	5.26	5.3	5.31	5.29
	Q	45℃		8.76	10.02	11.66	13.7	16.12	18.91	22.09	25.65	29.58	33.89	38.57	43.62
	P			3.73	3.94	4.12	4.28	4.42	4.53	4.62	4.69	4.74	4.76	4.76	4.74
	Q	40℃	7.56	8.63	10.09	11.92	14.14	16.74	19.72	23.07	26.79	30.89	35.36	40.2	45.4
	P		3.28	3.47	3.64	3.79	3.92	4.03	4.12	4.19	4.24	4.28	4.29	4.28	4.26
	Q	35℃	7.3	8.58	10.24	12.28	14.7	17.49	20.66	24.19	28.1	32.37			
	P		3.09	3.24	3.38	3.5	3.6	3.69	3.76	3.82	3.86	3.88			
	Q	30℃	7.11	8.61	10.49	12.75	15.37	18.37	21.74						
	P		2.93	3.05	3.15	3.25	3.33	3.4	3.46						
	Q	25℃	6.99	8.73	10.84	13.32									
	P		2.8	2.89	2.97	3.04									
	Q	20℃	6.94												
	P		2.7												
WW79KE-TFD-GV1	Q	72℃									24.13	27.65	31.59	35.97	40.8
	P										8.98	9.17	9.31	9.42	9.47
	Q	70℃									24.22	27.77	31.75	36.16	41.02
	P										8.62	8.8	8.93	9.02	9.07
	Q	65℃							18.52	21.35	24.58	28.22	32.3	36.81	41.77
	P								7.38	7.6	7.78	7.92	8.03	8.09	8.12
	Q	60℃						16.29	18.83	21.77	25.12	28.88	33.07	37.7	42.78
	P							6.46	6.68	6.86	7.01	7.12	7.2	7.25	7.26
	Q	55℃					14.32	16.61	19.29	22.36	25.84	29.74	34.07	38.84	44.05
	P						5.65	5.86	6.03	6.19	6.31	6.4	6.46	6.49	6.49
	Q	50℃			10.86	12.56	14.62	17.06	19.89	23.11	26.75	30.8	35.29	40.21	45.58
	P				4.73	4.94	5.14	5.31	5.46	5.58	5.68	5.75	5.8	5.82	5.81
	Q	45℃		9.41	10.92	12.79	15.02	17.63	20.63	24.03	27.84	32.06	36.72	41.82	47.37
	P			4.15	4.34	4.52	4.68	4.82	4.94	5.04	5.12	5.18	5.22	5.23	5.22
	Q	40℃	8.01	9.35	11.05	13.1	15.52	18.33	21.52	25.11	29.11	33.53	38.38	43.67	49.42
	P		3.67	3.84	4	4.14	4.27	4.39	4.49	4.57	4.64	4.68	4.71	4.72	4.71
	Q	35℃	7.79	9.34	11.24	13.5	16.13	19.14	22.54	26.34	30.55	35.18			
	P		3.45	3.58	3.71	3.82	3.92	4.02	4.1	4.17	4.22	4.26			
	Q	30℃	7.59	9.37	11.49	13.98	16.84	20.07	23.7						
	P		3.26	3.36	3.46	3.54	3.63	3.7	3.77						
	Q	25℃	7.41	9.44	11.81	14.54									
	P		3.11	3.18	3.25	3.32									
	Q	20℃	7.26												
	P		3												

注：以上数据基于 11.1K 吸气过热度，8.3K 过冷度
Note: The above data are based on 11.1K superheating and 8.3K subcooling

制热量 Heating Capacity R455A - EVI

型号 Model	项目 Item (KW)	Tc\Te	-35℃	-30℃	-25℃	-20℃	-15℃	-10℃	-5℃	0℃	5℃	10℃	15℃	20℃	25℃
WW94KE-TFD-GV1	Q	72℃									28.38	32.51	37.15	42.3	47.97
	P										10.56	10.78	10.95	11.07	11.14
	Q	70℃									28.48	32.66	37.33	42.52	48.24
	P										10.14	10.34	10.5	10.61	10.66
	Q	65℃							21.78	25.1	28.9	33.19	37.98	43.29	49.12
	P								8.68	8.93	9.15	9.32	9.44	9.52	9.55
	Q	60℃						19.15	22.14	25.6	29.53	33.96	38.89	44.33	50.31
	P							7.6	7.85	8.06	8.24	8.38	8.47	8.53	8.54
	Q	55℃					16.84	19.53	22.68	26.29	30.39	34.97	40.06	45.67	51.8
	P						6.64	6.89	7.1	7.27	7.42	7.53	7.6	7.63	7.63
	Q	50℃			12.77	14.76	17.19	20.06	23.39	27.18	31.45	36.22	41.49	47.28	53.6
	P				5.56	5.81	6.04	6.24	6.42	6.56	6.68	6.76	6.82	6.84	6.83
	Q	45℃		11.07	12.84	15.04	17.66	20.73	24.26	28.26	32.73	37.71	43.18	49.18	55.71
	P			4.88	5.1	5.31	5.5	5.67	5.81	5.93	6.02	6.09	6.13	6.15	6.13
	Q	40℃	9.42	11	12.99	15.41	18.26	21.55	25.3	29.52	34.23	39.42	45.13	51.35	58.11
	P		4.32	4.52	4.7	4.87	5.03	5.16	5.28	5.37	5.45	5.51	5.54	5.55	5.54
	Q	35℃	9.16	10.98	13.22	15.88	18.97	22.51	26.51	30.97	35.93	41.37			
	P		4.06	4.21	4.36	4.49	4.61	4.72	4.82	4.9	4.96	5.01			
	Q	30℃	8.92	11.02	13.52	16.44	19.8	23.61	27.87						
	P		3.84	3.95	4.06	4.17	4.27	4.35	4.43						
	Q	25℃	8.72	11.1	13.88	17.1									
	P		3.66	3.74	3.82	3.9									
	Q	20℃	8.54												
	P		3.53												
WW108KE-TFD-GV1	Q	72℃									33.01	37.81	43.2	49.19	55.79
	P										12.28	12.54	12.74	12.88	12.95
	Q	70℃									33.13	37.98	43.42	49.45	56.1
	P										11.79	12.03	12.21	12.34	12.4
	Q	65℃							25.33	29.19	33.61	38.6	44.17	50.34	57.12
	P								10.09	10.39	10.64	10.83	10.98	11.07	11.1
	Q	60℃						22.28	25.75	29.77	34.35	39.5	45.23	51.56	58.51
	P							8.83	9.13	9.38	9.58	9.74	9.85	9.92	9.93
	Q	55℃					19.59	22.72	26.38	30.58	35.34	40.67	46.59	53.11	60.25
	P						7.72	8.01	8.25	8.46	8.63	8.75	8.84	8.88	8.87
	Q	50℃			14.85	17.17	19.99	23.33	27.2	31.61	36.58	42.12	48.26	54.99	62.34
	P				6.46	6.76	7.03	7.26	7.46	7.63	7.77	7.87	7.93	7.95	7.94
	Q	45℃		12.87	14.94	17.49	20.54	24.11	28.21	32.86	38.07	43.85	50.22	57.2	64.79
	P			5.67	5.94	6.18	6.4	6.59	6.76	6.9	7	7.08	7.13	7.15	7.13
	Q	40℃	10.95	12.79	15.11	17.92	21.23	25.06	29.42	34.33	39.8	45.85	52.49	59.72	67.58
	P		5.03	5.26	5.47	5.67	5.85	6	6.14	6.25	6.34	6.41	6.45	6.46	6.44
	Q	35℃	10.65	12.77	15.37	18.46	22.06	26.18	30.83	36.02	41.78	48.12			
	P		4.72	4.9	5.07	5.22	5.37	5.49	5.6	5.7	5.77	5.83			
	Q	30℃	10.38	12.81	15.72	19.12	23.03	27.45	32.42						
	P		4.46	4.6	4.73	4.85	4.96	5.06	5.16						
	Q	25℃	10.14	12.9	16.15	19.88									
	P		4.26	4.35	4.45	4.54									
	Q	20℃	9.93												
	P		4.1												

注：以上数据基于 11.1K 吸气过热度，8.3K 过冷度
Note: The above data are based on 11.1K superheating and 8.3K subcooling

Heating Capacity R455A - EVI 制热量

型号 Model	项目 Item (KW)	Tc\Te	-35℃	-30℃	-25℃	-20℃	-15℃	-10℃	-5℃	0℃	5℃	10℃	15℃	20℃	25℃
WW125KE-TFD-GV1	Q	72℃									37.12	42.52	48.59	55.32	62.74
	P										13.81	14.1	14.33	14.48	14.57
	Q	70℃									37.25	42.71	48.83	55.61	63.09
	P										13.26	13.53	13.74	13.87	13.95
	Q	65℃							28.49	32.83	37.8	43.41	49.67	56.61	64.24
	P								11.35	11.68	11.96	12.18	12.35	12.45	12.49
	Q	60℃						25.05	28.96	33.48	38.63	44.42	50.86	57.98	65.8
	P							9.94	10.27	10.55	10.78	10.96	11.08	11.15	11.17
	Q	55℃					22.03	25.55	29.66	34.39	39.74	45.74	52.4	59.73	67.75
	P						8.69	9.01	9.28	9.51	9.7	9.84	9.94	9.98	9.98
	Q	50℃			16.7	19.31	22.48	26.24	30.58	35.55	41.14	47.37	54.27	61.84	70.11
	P				7.27	7.6	7.9	8.16	8.39	8.58	8.73	8.85	8.92	8.95	8.93
	Q	45℃		14.48	16.8	19.67	23.1	27.12	31.73	36.96	42.81	49.31	56.48	64.32	72.86
	P			6.38	6.68	6.95	7.2	7.41	7.6	7.75	7.88	7.97	8.02	8.04	8.02
	Q	40℃	12.31	14.39	16.99	20.15	23.88	28.18	33.09	38.61	44.76	51.56	59.02	67.17	76
	P		5.65	5.91	6.15	6.37	6.57	6.75	6.9	7.03	7.13	7.2	7.25	7.26	7.25
	Q	35℃	11.97	14.36	17.29	20.76	24.81	29.44	34.67	40.51	46.99	54.11			
	P		5.31	5.51	5.7	5.87	6.03	6.18	6.3	6.41	6.49	6.56			
	Q	30℃	11.67	14.41	17.68	21.5	25.9	30.87	36.45						
	P		5.02	5.17	5.32	5.45	5.58	5.69	5.8						
	Q	25℃	11.4	14.51	18.16	22.36									
	P		4.79	4.9	5	5.11									
	Q	20℃	11.16												
	P		4.61												
WW138KE-TFD-GV1	Q	72℃									42.64	48.85	55.81	63.55	72.07
	P										15.86	16.2	16.46	16.64	16.73
	Q	70℃									42.79	49.06	56.09	63.88	72.47
	P										15.23	15.54	15.78	15.94	16.02
	Q	65℃							32.72	37.71	43.42	49.86	57.06	65.03	73.79
	P								13.03	13.42	13.74	14	14.18	14.3	14.34
	Q	60℃						28.78	33.27	38.46	44.37	51.02	58.43	66.61	75.58
	P							11.41	11.79	12.12	12.38	12.58	12.73	12.81	12.83
	Q	55℃					25.3	29.35	34.07	39.5	45.65	52.54	60.19	68.61	77.83
	P						9.98	10.34	10.66	10.93	11.14	11.31	11.41	11.47	11.46
	Q	50℃			19.19	22.18	25.83	30.14	35.13	40.83	47.25	54.42	62.34	71.04	80.53
	P				8.35	8.73	9.07	9.38	9.64	9.86	10.03	10.16	10.24	10.28	10.26
	Q	45℃		16.63	19.3	22.59	26.53	31.15	36.45	42.45	49.18	56.65	64.88	73.89	83.69
	P			7.32	7.67	7.98	8.27	8.51	8.73	8.91	9.05	9.15	9.21	9.23	9.21
	Q	40℃	14.15	16.53	19.52	23.15	27.43	32.37	38.01	44.35	51.42	59.23	67.8	77.15	87.3
	P		6.49	6.79	7.07	7.32	7.55	7.75	7.93	8.07	8.19	8.27	8.33	8.34	8.32
	Q	35℃	13.76	16.5	19.86	23.85	28.5	33.81	39.82	46.53	53.97	62.16			
	P		6.1	6.33	6.55	6.75	6.93	7.1	7.24	7.36	7.46	7.53			
	Q	30℃	13.41	16.55	20.31	24.7	29.75	35.47	41.87						
	P		5.77	5.94	6.11	6.26	6.41	6.54	6.66						
	Q	25℃	13.1	16.67	20.86	25.69									
	P		5.5	5.62	5.75	5.86									
	Q	20℃	12.83												
	P		5.3												

注：以上数据基于 11.1K 吸气过热度，8.3K 过冷度
Note: The above data are based on 11.1K superheating and 8.3K subcooling

制热量 Heating Capacity R455A - EVI

型号 Model	项目 Item (KW)	Tc\Te	-35℃	-30℃	-25℃	-20℃	-15℃	-10℃	-5℃	0℃	5℃	10℃	15℃	20℃	25℃
WW154KE-TFD-GV1	Q	72℃									46.71	53.51	61.14	69.61	78.95
	P										17.37	17.74	18.03	18.22	18.33
	Q	70℃									46.88	53.74	61.44	69.98	79.38
	P										16.68	17.02	17.28	17.46	17.55
	Q	65℃							35.84	41.31	47.56	54.62	62.5	71.23	80.83
	P								14.28	14.7	15.05	15.33	15.54	15.66	15.71
	Q	60℃						31.52	36.44	42.13	48.6	55.89	64	72.96	82.79
	P							12.5	12.92	13.27	13.56	13.78	13.94	14.03	14.05
	Q	55℃					27.72	32.14	37.32	43.27	50.01	57.55	65.93	75.15	85.25
	P						10.93	11.33	11.68	11.97	12.21	12.38	12.5	12.56	12.56
	Q	50℃			21.02	24.3	28.29	33.01	38.48	44.73	51.76	59.61	68.28	77.81	88.21
	P				9.15	9.56	9.94	10.27	10.56	10.8	10.99	11.13	11.22	11.26	11.24
	Q	45℃		18.22	21.14	24.75	29.07	34.12	39.92	46.5	53.87	62.05	71.07	80.93	91.68
	P			8.02	8.4	8.74	9.05	9.33	9.56	9.76	9.91	10.02	10.09	10.12	10.09
	Q	40℃	15.49	18.1	21.38	25.36	30.04	35.46	41.64	48.58	56.32	64.88	74.27	84.51	95.63
	P		7.11	7.44	7.74	8.02	8.27	8.49	8.68	8.84	8.97	9.06	9.12	9.14	9.12
	Q	35℃	15.07	18.07	21.75	26.13	31.22	37.04	43.62	50.97	59.12	68.09			
	P		6.68	6.93	7.17	7.39	7.59	7.77	7.93	8.06	8.17	8.25			
	Q	30℃	14.69	18.13	22.24	27.06	32.58	38.85	45.87						
	P		6.32	6.51	6.69	6.86	7.02	7.17	7.3						
	Q	25℃	14.35	18.26	22.85	28.14									
	P		6.02	6.16	6.29	6.42									
	Q	20℃	14.05												
	P		5.8												
WW170KE-TFD-GV1	Q	72℃									55.62	63.72	72.81	82.9	94.02
	P										20.69	21.13	21.47	21.7	21.83
	Q	70℃									55.83	64.01	73.17	83.34	94.54
	P										19.87	20.27	20.58	20.79	20.9
	Q	65℃							42.69	49.2	56.64	65.04	74.43	84.83	96.26
	P								17	17.51	17.93	18.26	18.5	18.65	18.71
	Q	60℃						37.54	43.4	50.17	57.88	66.56	76.22	86.89	98.59
	P							14.89	15.38	15.8	16.15	16.42	16.6	16.71	16.73
	Q	55℃					33.01	38.28	44.45	51.53	59.55	68.54	78.51	89.5	101.53
	P						13.02	13.49	13.91	14.26	14.54	14.75	14.89	14.96	14.96
	Q	50℃			25.03	28.94	33.69	39.31	45.83	53.27	61.64	70.99	81.32	92.67	105.05
	P				10.89	11.39	11.84	12.23	12.58	12.86	13.09	13.26	13.36	13.41	13.38
	Q	45℃		21.7	25.17	29.47	34.62	40.63	47.55	55.38	64.15	73.9	84.63	96.39	109.18
	P			9.55	10	10.41	10.78	11.11	11.39	11.62	11.8	11.94	12.02	12.05	12.02
	Q	40℃	18.45	21.56	25.47	30.2	35.78	42.23	49.58	57.86	67.08	77.26	88.45	100.65	113.89
	P		8.47	8.86	9.22	9.55	9.85	10.11	10.34	10.53	10.68	10.79	10.86	10.88	10.86
	Q	35℃	17.94	21.52	25.91	31.12	37.18	44.11	51.95	60.7	70.41	81.09			
	P		7.95	8.26	8.54	8.8	9.04	9.26	9.44	9.6	9.73	9.83			
	Q	30℃	17.49	21.59	26.49	32.22	38.8	46.26	54.63						
	P		7.52	7.75	7.97	8.17	8.36	8.53	8.69						
	Q	25℃	17.09	21.75	27.21	33.51									
	P		7.18	7.34	7.49	7.65									
	Q	20℃	16.73												
	P		6.91												

注：以上数据基于 11.1K 吸气过热度，8.3K 过冷度
Note: The above data are based on 11.1K superheating and 8.3K subcooling

Heating Capacity R455A - EVI 制热量

型号 Model	项目 Item (KW)	Tc\Te	-35℃	-30℃	-25℃	-20℃	-15℃	-10℃	-5℃	0℃	5℃	10℃	15℃	20℃	25℃
WW250KE-TWD-GV1	Q	72℃									72.63	83.21	95.07	108.24	122.76
	P										27.01	27.59	28.03	28.34	28.5
	Q	70℃									72.89	83.57	95.54	108.82	123.44
	P										25.94	26.47	26.88	27.15	27.29
	Q	65℃							55.74	64.24	73.96	84.93	97.19	110.77	125.7
	P								22.2	22.86	23.41	23.84	24.16	24.36	24.43
	Q	60℃						49.02	56.67	65.51	75.58	86.91	99.52	113.45	128.74
	P							19.44	20.09	20.64	21.09	21.44	21.68	21.82	21.85
	Q	55℃					43.1	49.99	58.04	67.29	77.76	89.49	102.52	116.87	132.57
	P						17	17.62	18.16	18.61	18.98	19.26	19.44	19.53	19.53
	Q	50℃			32.68	37.78	43.99	51.33	59.84	69.55	80.49	92.69	106.18	121	137.17
	P				14.22	14.87	15.46	15.97	16.42	16.79	17.09	17.31	17.45	17.5	17.48
	Q	45℃		28.33	32.87	38.48	45.2	53.06	62.08	72.31	83.77	96.49	110.51	125.85	142.56
	P			12.48	13.06	13.6	14.08	14.5	14.87	15.17	15.41	15.59	15.69	15.73	15.69
	Q	40℃	24.09	28.15	33.25	39.43	46.72	55.15	64.75	75.55	87.59	100.89	115.49	131.42	148.71
	P		11.06	11.57	12.04	12.47	12.86	13.21	13.51	13.75	13.95	14.09	14.18	14.21	14.18
	Q	35℃	23.43	28.1	33.83	40.63	48.54	57.6	67.83	79.26	91.94	105.88			
	P		10.39	10.78	11.15	11.5	11.81	12.09	12.33	12.54	12.71	12.83			
	Q	30℃	22.84	28.19	34.59	42.07	50.67	60.41	71.33						
	P		9.82	10.12	10.4	10.67	10.92	11.14	11.35						
	Q	25℃	22.31	28.4	35.53	43.75									
	P		9.37	9.58	9.79	9.99									
	Q	20℃	21.85												
	P		9.03												
WW300KE-TWD-GV1	Q	72℃									89.39	102.41	117.01	133.22	151.1
	P										33.25	33.95	34.5	34.87	35.08
	Q	70℃									89.72	102.86	117.59	133.93	151.93
	P										31.93	32.58	33.08	33.41	33.59
	Q	65℃							68.6	79.06	91.02	104.53	119.62	136.33	154.7
	P								27.33	28.14	28.81	29.34	29.73	29.98	30.07
	Q	60℃						60.33	69.74	80.63	93.02	106.96	122.49	139.64	158.45
	P							23.93	24.72	25.4	25.95	26.38	26.68	26.85	26.89
	Q	55℃					53.05	61.52	71.43	82.81	95.71	110.15	126.18	143.84	163.16
	P						20.92	21.69	22.35	22.91	23.36	23.7	23.93	24.04	24.03
	Q	50℃			40.22	46.5	54.14	63.18	73.65	85.6	99.07	114.08	130.69	148.93	168.83
	P				17.5	18.3	19.03	19.66	20.21	20.67	21.03	21.3	21.47	21.54	21.51
	Q	45℃		34.87	40.45	47.36	55.63	65.3	76.41	89	103.1	118.76	136.01	154.9	175.46
	P			15.35	16.08	16.74	17.33	17.85	18.3	18.67	18.97	19.18	19.32	19.36	19.31
	Q	40℃	29.65	34.65	40.92	48.53	57.5	67.87	79.69	92.98	107.8	124.17	142.14	161.75	183.03
	P		13.61	14.24	14.82	15.35	15.83	16.25	16.62	16.93	17.17	17.35	17.45	17.49	17.45
	Q	35℃	28.84	34.59	41.63	50.01	59.74	70.89	83.48	97.56	113.15	130.31			
	P		12.78	13.27	13.73	14.15	14.53	14.88	15.18	15.43	15.64	15.79			
	Q	30℃	28.11	34.69	42.57	51.78	62.36	74.35	87.79						
	P		12.09	12.45	12.8	13.13	13.43	13.71	13.96						
	Q	25℃	27.46	34.95	43.73	53.85									
	P		11.53	11.79	12.04	12.29									
	Q	20℃	26.89												
	P		11.11												

注：以上数据基于 11.1K 吸气过热度，8.3K 过冷度
Note: The above data are based on 11.1K superheating and 8.3K subcooling

制热量 Heating Capacity R454B - EVI

型号 Model	项目 Item (KW)	Tc\Te	-25℃	-20℃	-15℃	-10℃	-5℃	0℃	5℃	10℃	15℃	20℃	25℃	30℃
WW50HP-TFD-GV1	Q	65℃						10.18	11.4	12.97	14.88	17.12	19.67	22.52
	P							3.17	3.14	3.11	3.08	3.05	3.03	3.01
	Q	60℃					8.65	9.62	10.94	12.6	14.57	16.85	19.42	22.26
	P						2.87	2.85	2.83	2.8	2.78	2.76	2.74	2.72
	Q	55℃				7.52	8.28	9.37	10.79	12.52	14.55	16.86	19.44	22.28
	P					2.59	2.58	2.56	2.54	2.52	2.5	2.48	2.47	2.46
	Q	50℃			6.72	7.28	8.18	9.39	10.9	12.71	14.79	17.12	19.71	22.53
	P				2.32	2.32	2.3	2.29	2.27	2.26	2.24	2.23	2.22	2.22
	Q	45℃		6.16	6.56	7.28	8.31	9.63	11.23	13.1	15.22	17.58	20.17	22.96
	P			2.07	2.07	2.07	2.06	2.05	2.03	2.02	2.01	2	2	1.99
	Q	40℃	5.77	6.03	6.6	7.46	8.62	10.04	11.73	13.66	15.81	18.19	20.77	
	P		1.84	1.85	1.85	1.85	1.84	1.83	1.82	1.81	1.8	1.79	1.79	
	Q	35℃	5.61	6.05	6.78	7.79	9.06	10.59	12.35	14.33	16.52	18.9		
	P		1.64	1.65	1.65	1.65	1.65	1.64	1.63	1.62	1.62	1.61		
	Q	30℃	5.55	6.17	7.07	8.21	9.6	11.22	13.04	15.07	17.29			
	P		1.47	1.48	1.49	1.48	1.48	1.47	1.47	1.46	1.46			
	Q	25℃	5.57	6.36	7.41	8.68	10.18	11.88	13.77	15.84				
	P		1.33	1.34	1.35	1.34	1.34	1.34	1.33	1.32				
	Q	20℃	5.61	6.57	7.76	9.16	10.76	12.54	14.49					
	P		1.23	1.23	1.23	1.23	1.23	1.22	1.22					
	Q	15℃	5.62	6.75	8.08	9.6	11.29	13.14						
	P		1.15	1.15	1.15	1.15	1.15	1.14						
	Q	10℃	5.57	6.85	8.31	9.94	11.73							
	P		1.1	1.1	1.1	1.1	1.09							
WW70HP-TFD-GV1	Q	65℃						12.32	13.79	15.69	18	20.71	23.8	27.25
	P							3.83	3.8	3.76	3.73	3.69	3.66	3.64
	Q	60℃					10.46	11.64	13.24	15.24	17.62	20.38	23.49	26.93
	P						3.48	3.45	3.42	3.39	3.36	3.34	3.31	3.29
	Q	55℃				9.09	10.01	11.34	13.06	15.15	17.61	20.4	23.52	26.95
	P					3.13	3.12	3.09	3.07	3.05	3.02	3	2.99	2.97
	Q	50℃			8.12	8.81	9.89	11.36	13.19	15.37	17.89	20.72	23.84	27.25
	P				2.81	2.8	2.79	2.77	2.75	2.73	2.71	2.7	2.69	2.68
	Q	45℃		7.45	7.93	8.81	10.05	11.65	13.59	15.85	18.41	21.27	24.4	27.78
	P			2.51	2.51	2.5	2.49	2.48	2.46	2.45	2.43	2.42	2.41	2.41
	Q	40℃	6.98	7.29	7.98	9.03	10.42	12.15	14.19	16.52	19.13	22	25.12	
	P		2.23	2.24	2.24	2.23	2.22	2.21	2.2	2.19	2.18	2.17	2.17	
	Q	35℃	6.78	7.31	8.2	9.42	10.96	12.81	14.94	17.33	19.98	22.87		
	P		1.99	2	2	2	1.99	1.98	1.97	1.96	1.96	1.95		
	Q	30℃	6.72	7.47	8.55	9.93	11.61	13.57	15.78	18.24	20.91			
	P		1.78	1.79	1.8	1.79	1.79	1.78	1.77	1.77	1.76			
	Q	25℃	6.74	7.7	8.96	10.51	12.32	14.37	16.66	19.17				
	P		1.61	1.62	1.63	1.63	1.62	1.62	1.61	1.6				
	Q	20℃	6.78	7.95	9.39	11.08	13.01	15.17	17.53					
	P		1.48	1.49	1.49	1.49	1.49	1.48	1.47					
	Q	15℃	6.8	8.16	9.77	11.61	13.66	15.9						
	P		1.39	1.39	1.4	1.39	1.39	1.38						
	Q	10℃	6.74	8.29	10.06	12.03	14.19							
	P		1.33	1.33	1.33	1.33	1.32							

注：以上数据基于 11.1K 吸气过热度，8.3K 过冷度
Note: The above data are based on 11.1K superheating and 8.3K subcooling

Heating Capacity R454B - EVI 制热量

型号 Model	项目 Item (KW)	Tc\Te	-25℃	-20℃	-15℃	-10℃	-5℃	0℃	5℃	10℃	15℃	20℃	25℃	30℃
WW96HP-TFD-GV1	Q	65℃						18.31	20.49	23.31	26.75	30.77	35.36	40.49
	P							5.7	5.64	5.59	5.54	5.49	5.45	5.41
	Q	60℃					15.54	17.3	19.67	22.64	26.19	30.29	34.91	40.02
	P						5.17	5.13	5.08	5.04	5	4.96	4.92	4.89
	Q	55℃				13.51	14.88	16.85	19.4	22.52	26.16	30.32	34.96	40.06
	P					4.66	4.63	4.6	4.56	4.53	4.49	4.46	4.44	4.42
	Q	50℃			12.07	13.09	14.7	16.88	19.6	22.85	26.58	30.79	35.43	40.5
	P				4.18	4.16	4.14	4.12	4.09	4.06	4.03	4.01	3.99	3.98
	Q	45℃		11.07	11.79	13.09	14.93	17.31	20.19	23.55	27.36	31.61	36.25	41.28
	P			3.73	3.73	3.72	3.7	3.68	3.66	3.63	3.61	3.6	3.59	3.58
	Q	40℃	10.38	10.83	11.86	13.42	15.49	18.06	21.08	24.55	28.43	32.7	37.33	
	P		3.31	3.32	3.32	3.32	3.31	3.29	3.27	3.25	3.24	3.23	3.22	
	Q	35℃	10.08	10.87	12.19	14	16.29	19.03	22.2	25.76	29.7	33.98		
	P		2.95	2.97	2.97	2.97	2.96	2.95	2.93	2.92	2.91	2.9		
	Q	30℃	9.98	11.1	12.7	14.76	17.26	20.16	23.45	27.1	31.08			
	P		2.65	2.66	2.67	2.67	2.66	2.65	2.64	2.63	2.62			
	Q	25℃	10.01	11.44	13.32	15.61	18.3	21.36	24.76	28.48				
	P		2.4	2.41	2.42	2.42	2.41	2.4	2.39	2.38				
	Q	20℃	10.08	11.81	13.95	16.47	19.34	22.54	26.05					
	P		2.2	2.22	2.22	2.22	2.21	2.2	2.19					
	Q	15℃	10.11	12.13	14.52	17.25	20.3	23.63						
	P		2.06	2.07	2.07	2.07	2.06	2.05						
	Q	10℃	10.01	12.32	14.95	17.88	21.08							
	P		1.97	1.98	1.98	1.98	1.97							
WW126HP-TFD-GV1	Q	65℃						24.62	27.39	30.69	34.6	39.19	44.54	50.72
	P							7.63	7.64	7.66	7.71	7.78	7.88	8.01
	Q	60℃					22.02	24.55	27.56	31.12	35.33	40.24	45.94	52.5
	P						6.83	6.83	6.83	6.85	6.89	6.95	7.03	7.14
	Q	55℃				19.6	21.9	24.64	27.89	31.72	36.22	41.45	47.5	54.44
	P					6.1	6.09	6.09	6.09	6.11	6.14	6.19	6.26	6.35
	Q	50℃			17.33	19.43	21.92	24.87	28.36	32.47	37.26	42.83	49.23	56.56
	P				5.42	5.42	5.42	5.42	5.42	5.44	5.46	5.5	5.55	5.62
	Q	45℃		15.2	17.13	19.39	22.07	25.24	28.98	33.36	38.46	44.35	51.11	58.83
	P			4.78	4.8	4.81	4.81	4.82	4.82	4.83	4.85	4.87	4.91	4.96
	Q	40℃	13.21	14.98	17.05	19.48	22.35	25.74	29.73	34.39	39.79	46.02	53.14	
	P		4.16	4.21	4.24	4.27	4.28	4.29	4.29	4.3	4.31	4.32	4.34	
	Q	35℃	12.99	14.87	17.08	19.67	22.74	26.36	30.6	35.54	41.25	47.82		
	P		3.65	3.71	3.76	3.79	3.82	3.83	3.83	3.83	3.84	3.84		
	Q	30℃	12.86	14.86	17.21	19.98	23.25	27.09	31.59	36.81	42.84			
	P		3.2	3.29	3.35	3.4	3.42	3.44	3.45	3.44	3.44			
	Q	25℃	12.81	14.94	17.43	20.38	23.85	27.93	32.68	38.19				
	P		2.83	2.93	3.01	3.07	3.1	3.12	3.13	3.12				
	Q	20℃	12.85	15.09	17.74	20.86	24.54	28.86	33.88					
	P		2.52	2.65	2.74	2.81	2.85	2.88	2.88					
	Q	15℃	12.95	15.32	18.12	21.43	25.32	29.87						
	P		2.29	2.43	2.54	2.62	2.68	2.7						
	Q	10℃	13.12	15.62	18.58	22.07	26.17							
	P		2.13	2.29	2.42	2.51	2.57							

注：以上数据基于 11.1K 吸气过热度，8.3K 过冷度
Note: The above data are based on 11.1K superheating and 8.3K subcooling

制热量 Heating Capacity R454B - EVI

型号 Model	项目 Item (KW)	Tc\Te	-25℃	-20℃	-15℃	-10℃	-5℃	0℃	5℃	10℃	15℃	20℃	25℃	30℃
WW130HP-TFD-GV1	Q	65℃						25.85	28.76	32.23	36.33	41.15	46.77	53.26
	P							8.02	8.02	8.05	8.1	8.17	8.28	8.41
	Q	60℃					23.13	25.78	28.94	32.68	37.09	42.25	48.24	55.13
	P						7.18	7.17	7.17	7.2	7.24	7.3	7.39	7.5
	Q	55℃				20.58	23	25.87	29.28	33.31	38.03	43.53	49.88	57.17
	P					6.41	6.4	6.39	6.4	6.42	6.45	6.5	6.57	6.66
	Q	50℃			18.19	20.4	23.02	26.12	29.78	34.09	39.13	44.97	51.7	59.39
	P				5.69	5.69	5.69	5.69	5.69	5.71	5.73	5.77	5.83	5.9
	Q	45℃		15.96	17.99	20.36	23.18	26.51	30.43	35.03	40.38	46.57	53.67	61.77
	P			5.02	5.04	5.05	5.05	5.06	5.06	5.07	5.09	5.12	5.16	5.21
	Q	40℃	13.87	15.73	17.9	20.45	23.47	27.03	31.22	36.11	41.78	48.32	55.81	
	P		4.37	4.42	4.46	4.48	4.49	4.5	4.51	4.51	4.52	4.54	4.56	
	Q	35℃	13.64	15.62	17.93	20.66	23.88	27.68	32.13	37.32	43.32	50.21		
	P		3.83	3.9	3.95	3.98	4.01	4.02	4.03	4.03	4.03	4.03		
	Q	30℃	13.5	15.6	18.07	20.98	24.41	28.45	33.17	38.65	44.98			
	P		3.36	3.45	3.52	3.57	3.6	3.61	3.62	3.62	3.61			
	Q	25℃	13.46	15.68	18.3	21.4	25.04	29.33	34.32	40.11				
	P		2.97	3.08	3.16	3.22	3.26	3.28	3.28	3.28				
	Q	20℃	13.49	15.85	18.63	21.91	25.77	30.3	35.57					
	P		2.65	2.78	2.88	2.95	3	3.02	3.03					
	Q	15℃	13.6	16.09	19.03	22.5	26.59	31.37						
	P		2.41	2.56	2.67	2.76	2.81	2.84						
	Q	10℃	13.78	16.4	19.51	23.17	27.48							
	P		2.24	2.41	2.54	2.64	2.7							
WW150HP-TFD-GV1	Q	65℃						29.74	33.09	37.08	41.8	47.35	53.81	61.28
	P							9.22	9.23	9.26	9.32	9.4	9.52	9.68
	Q	60℃					26.61	29.66	33.29	37.6	42.68	48.61	55.5	63.42
	P						8.26	8.25	8.25	8.28	8.33	8.4	8.5	8.63
	Q	55℃				23.68	26.46	29.77	33.69	38.32	43.75	50.08	57.39	65.77
	P					7.37	7.36	7.35	7.36	7.38	7.42	7.48	7.56	7.67
	Q	50℃			20.93	23.47	26.48	30.05	34.27	39.22	45.02	51.74	59.48	68.33
	P				6.55	6.55	6.54	6.54	6.55	6.57	6.59	6.64	6.7	6.79
	Q	45℃		18.36	20.69	23.43	26.67	30.5	35.01	40.3	46.46	53.58	61.75	71.07
	P			5.77	5.79	5.81	5.81	5.82	5.83	5.84	5.86	5.89	5.93	5.99
	Q	40℃	15.96	18.1	20.59	23.53	27	31.1	35.92	41.54	48.07	55.6	64.21	
	P		5.03	5.09	5.13	5.15	5.17	5.18	5.19	5.19	5.2	5.22	5.24	
	Q	35℃	15.69	17.97	20.63	23.77	27.48	31.85	36.97	42.94	49.84	57.77		
	P		4.41	4.49	4.54	4.58	4.61	4.62	4.63	4.63	4.63	4.64		
	Q	30℃	15.53	17.95	20.79	24.14	28.09	32.73	38.16	44.47	51.75			
	P		3.87	3.97	4.05	4.1	4.14	4.16	4.16	4.16	4.15			
	Q	25℃	15.48	18.04	21.06	24.62	28.81	33.74	39.49	46.14				
	P		3.41	3.54	3.64	3.7	3.75	3.77	3.78	3.77				
	Q	20℃	15.52	18.23	21.43	25.21	29.65	34.86	40.93					
	P		3.05	3.2	3.31	3.39	3.45	3.48	3.48					
	Q	15℃	15.65	18.51	21.9	25.89	30.59	36.09						
	P		2.77	2.94	3.07	3.17	3.23	3.27						
	Q	10℃	15.85	18.87	22.44	26.66	31.62							
	P		2.58	2.77	2.92	3.03	3.11							

注：以上数据基于 11.1K 吸气过热度，8.3K 过冷度
Note: The above data are based on 11.1K superheating and 8.3K subcooling

Heating Capacity R454B - EVI 制热量

型号 Model	项目 Item (KW)	Tc\Te	-25℃	-20℃	-15℃	-10℃	-5℃	0℃	5℃	10℃	15℃	20℃	25℃	30℃
WW170HP-TFD-GV1	Q	65℃						34.59	38.49	43.13	48.62	55.07	62.59	71.28
	P							10.73	10.74	10.77	10.84	10.94	11.08	11.26
	Q	60℃					30.95	34.5	38.73	43.74	49.64	56.55	64.55	73.77
	P						9.6	9.59	9.6	9.63	9.68	9.77	9.89	10.04
	Q	55℃				27.54	30.78	34.62	39.19	44.58	50.9	58.25	66.76	76.51
	P					8.57	8.56	8.55	8.56	8.59	8.63	8.7	8.79	8.92
	Q	50℃			24.35	27.31	30.8	34.95	39.86	45.63	52.37	60.18	69.19	79.48
	P				7.62	7.61	7.61	7.61	7.62	7.64	7.67	7.72	7.8	7.9
	Q	45℃		21.36	24.07	27.25	31.02	35.47	40.72	46.88	54.04	62.33	71.83	82.67
	P			6.72	6.74	6.76	6.76	6.77	6.78	6.79	6.81	6.85	6.9	6.97
	Q	40℃	18.56	21.06	23.96	27.37	31.41	36.17	41.78	48.32	55.92	64.67	74.68	
	P		5.85	5.92	5.96	5.99	6.01	6.03	6.03	6.04	6.05	6.07	6.1	
	Q	35℃	18.25	20.9	24	27.65	31.96	37.05	43	49.94	57.97	67.2		
	P		5.13	5.22	5.29	5.33	5.36	5.38	5.39	5.39	5.39	5.39		
	Q	30℃	18.07	20.88	24.18	28.07	32.67	38.07	44.39	51.73	60.2			
	P		4.5	4.62	4.71	4.77	4.81	4.83	4.84	4.84	4.83			
	Q	25℃	18.01	20.99	24.5	28.64	33.52	39.25	45.93	53.67				
	P		3.97	4.12	4.23	4.31	4.36	4.39	4.4	4.39				
	Q	20℃	18.06	21.21	24.93	29.32	34.49	40.55	47.61					
	P		3.55	3.72	3.85	3.95	4.01	4.04	4.05					
	Q	15℃	18.21	21.53	25.47	30.12	35.59	41.98						
	P		3.22	3.42	3.58	3.69	3.76	3.8						
	Q	10℃	18.44	21.95	26.11	31.01	36.78							
	P		3	3.22	3.4	3.53	3.61							
WW200HP-TFD-GV1	Q	65℃						38.1	42.39	47.5	53.55	60.66	68.94	78.51
	P							11.82	11.83	11.86	11.94	12.05	12.2	12.4
	Q	60℃					34.09	38	42.65	48.17	54.67	62.28	71.1	81.25
	P						10.58	10.57	10.57	10.61	10.67	10.76	10.89	11.06
	Q	55℃				30.33	33.9	38.13	43.16	49.09	56.05	64.16	73.52	84.26
	P					9.44	9.43	9.42	9.43	9.46	9.5	9.58	9.68	9.82
	Q	50℃			26.82	30.07	33.93	38.49	43.9	50.25	57.67	66.28	76.2	87.53
	P				8.39	8.39	8.38	8.38	8.39	8.41	8.45	8.51	8.59	8.7
	Q	45℃		23.53	26.51	30.01	34.16	39.07	44.85	51.63	59.52	68.64	79.11	91.05
	P			7.4	7.42	7.44	7.45	7.46	7.46	7.48	7.5	7.54	7.6	7.68
	Q	40℃	20.44	23.19	26.38	30.15	34.59	39.84	46.01	53.22	61.58	71.22	82.25	
	P		6.44	6.52	6.57	6.6	6.62	6.64	6.64	6.65	6.66	6.69	6.72	
	Q	35℃	20.1	23.02	26.43	30.45	35.2	40.8	47.36	55	63.85	74.01		
	P		5.64	5.75	5.82	5.87	5.91	5.92	5.93	5.94	5.94	5.94		
	Q	30℃	19.9	23	26.63	30.92	35.98	41.93	48.89	56.97	66.3			
	P		4.95	5.09	5.18	5.25	5.3	5.32	5.33	5.33	5.32			
	Q	25℃	19.83	23.12	26.98	31.54	36.91	43.22	50.58	59.11				
	P		4.37	4.54	4.66	4.75	4.8	4.83	4.84	4.83				
	Q	20℃	19.89	23.36	27.46	32.29	37.99	44.66	52.43					
	P		3.9	4.1	4.24	4.35	4.42	4.45	4.46					
	Q	15℃	20.05	23.72	28.05	33.17	39.19	46.23						
	P		3.55	3.77	3.94	4.06	4.14	4.19						
	Q	10℃	20.31	24.17	28.75	34.16	40.51							
	P		3.3	3.55	3.75	3.89	3.98							

注：以上数据基于 11.1K 吸气过热度，8.3K 过冷度
Note: The above data are based on 11.1K superheating and 8.3K subcooling

制热量 Heating Capacity R454B - EVI

型号 Model	项目 Item (KW)	Tc\Te	-25℃	-20℃	-15℃	-10℃	-5℃	0℃	5℃	10℃	15℃	20℃	25℃	30℃
WW220HP-TFD-GV1	Q	65℃						43.14	48	53.79	60.64	68.69	78.07	88.91
	P							13.38	13.39	13.43	13.52	13.64	13.81	14.04
	Q	60℃					38.6	43.03	48.3	54.55	61.92	70.53	80.51	92.01
	P						11.98	11.96	11.97	12.01	12.08	12.18	12.33	12.52
	Q	55℃				34.35	38.39	43.18	48.88	55.6	63.48	72.65	83.26	95.42
	P					10.69	10.67	10.67	10.68	10.71	10.76	10.85	10.97	11.12
	Q	50℃			30.37	34.06	38.42	43.59	49.71	56.91	65.31	75.06	86.29	99.13
	P				9.5	9.5	9.49	9.49	9.5	9.53	9.57	9.63	9.72	9.85
	Q	45℃		26.64	30.02	33.99	38.69	44.24	50.79	58.47	67.4	77.73	89.59	103.11
	P			8.38	8.41	8.43	8.44	8.44	8.45	8.47	8.5	8.54	8.6	8.7
	Q	40℃	23.15	26.26	29.88	34.14	39.17	45.12	52.11	60.27	69.74	80.66	93.15	
	P		7.3	7.38	7.44	7.48	7.5	7.51	7.52	7.53	7.55	7.57	7.61	
	Q	35℃	22.76	26.07	29.93	34.48	39.86	46.2	53.63	62.29	72.31	83.81		
	P		6.39	6.51	6.59	6.65	6.69	6.71	6.72	6.72	6.72	6.73		
	Q	30℃	22.54	26.04	30.16	35.02	40.75	47.49	55.37	64.52	75.08			
	P		5.61	5.76	5.87	5.95	6	6.03	6.04	6.03	6.02			
	Q	25℃	22.46	26.18	30.55	35.72	41.8	48.95	57.28	66.94				
	P		4.95	5.14	5.28	5.37	5.44	5.47	5.48	5.47				
	Q	20℃	22.52	26.45	31.09	36.57	43.02	50.58	59.37					
	P		4.42	4.64	4.8	4.92	5	5.04	5.05					
	Q	15℃	22.71	26.86	31.77	37.56	44.38	52.36						
	P		4.02	4.27	4.46	4.6	4.69	4.74						
	Q	10℃	23	27.38	32.56	38.68	45.88							
	P		3.74	4.02	4.24	4.4	4.51							
WW258HP-TFD-GV1	Q	65℃						47.81	53.19	59.6	67.19	76.11	86.5	98.51
	P							14.83	14.84	14.89	14.98	15.12	15.31	15.56
	Q	60℃					42.77	47.68	53.52	60.45	68.61	78.14	89.21	101.95
	P						13.27	13.26	13.27	13.31	13.38	13.5	13.66	13.87
	Q	55℃				38.06	42.53	47.85	54.16	61.6	70.34	80.5	92.25	105.73
	P					11.85	11.83	11.82	11.83	11.86	11.93	12.02	12.15	12.33
	Q	50℃			33.65	37.73	42.57	48.3	55.08	63.05	72.37	83.17	95.61	109.84
	P				10.53	10.52	10.52	10.52	10.53	10.56	10.6	10.67	10.77	10.91
	Q	45℃		29.52	33.26	37.66	42.87	49.02	56.28	64.79	74.69	86.13	99.27	114.25
	P			9.28	9.32	9.34	9.35	9.36	9.37	9.38	9.41	9.46	9.53	9.64
	Q	40℃	25.65	29.1	33.11	37.83	43.41	49.99	57.73	66.78	77.28	89.37	103.21	
	P		8.09	8.18	8.24	8.28	8.31	8.33	8.34	8.35	8.36	8.39	8.43	
	Q	35℃	25.22	28.88	33.16	38.21	44.17	51.2	59.43	69.02	80.12	92.87		
	P		7.08	7.21	7.31	7.37	7.41	7.43	7.44	7.45	7.45	7.45		
	Q	30℃	24.97	28.86	33.42	38.8	45.15	52.62	61.35	71.49	83.2			
	P		6.22	6.38	6.51	6.59	6.65	6.68	6.69	6.69	6.67			
	Q	25℃	24.89	29.01	33.85	39.57	46.32	54.24	63.47	74.18				
	P		5.49	5.69	5.85	5.96	6.03	6.06	6.08	6.06				
	Q	20℃	24.96	29.31	34.45	40.52	47.67	56.04	65.79					
	P		4.9	5.14	5.32	5.46	5.54	5.59	5.6					
	Q	15℃	25.16	29.76	35.2	41.62	49.18	58.01						
	P		4.45	4.73	4.94	5.1	5.2	5.25						
	Q	10℃	25.48	30.33	36.08	42.86	50.83							
	P		4.14	4.46	4.7	4.88	4.99							

注：以上数据基于 11.1K 吸气过热度，8.3K 过冷度
Note: The above data are based on 11.1K superheating and 8.3K subcooling

Heating Capacity R454B - EVI 制热量

型号 Model	项目 Item (KW)	Tc\Te	-25℃	-20℃	-15℃	-10℃	-5℃	0℃	5℃	10℃	15℃	20℃	25℃	30℃
WW286HP-TFD-GV1	Q	65℃						55.12	61.33	68.73	77.48	87.76	99.74	113.59
	P							17.1	17.11	17.17	17.27	17.43	17.65	17.94
	Q	60℃					49.32	54.98	61.71	69.7	79.11	90.11	102.87	117.56
	P						15.3	15.29	15.3	15.35	15.43	15.57	15.75	16
	Q	55℃				43.89	49.04	55.17	62.45	71.03	81.1	92.83	106.38	121.92
	P					13.66	13.64	13.63	13.64	13.68	13.75	13.86	14.01	14.21
	Q	50℃			38.8	43.51	49.09	55.7	63.51	72.71	83.45	95.91	110.25	126.65
	P				12.14	12.13	12.13	12.13	12.14	12.17	12.22	12.31	12.42	12.58
	Q	45℃		34.04	38.36	43.43	49.43	56.53	64.9	74.7	86.12	99.32	114.47	131.74
	P			10.7	10.74	10.77	10.78	10.79	10.8	10.82	10.85	10.91	10.99	11.11
	Q	40℃	29.58	33.55	38.17	43.62	50.05	57.65	66.57	77	89.11	103.05	119.01	
	P		9.32	9.43	9.5	9.55	9.58	9.6	9.61	9.62	9.64	9.67	9.72	
	Q	35℃	29.08	33.3	38.24	44.06	50.93	59.03	68.53	79.59	92.38	107.08		
	P		8.17	8.32	8.42	8.5	8.55	8.57	8.58	8.59	8.59	8.59		
	Q	30℃	28.79	33.28	38.53	44.74	52.06	60.67	70.74	82.44	95.93			
	P		7.17	7.36	7.5	7.6	7.67	7.7	7.72	7.71	7.69			
	Q	25℃	28.7	33.45	39.03	45.63	53.41	62.54	73.19	85.53				
	P		6.33	6.56	6.74	6.87	6.95	6.99	7.01	6.99				
	Q	20℃	28.78	33.8	39.73	46.72	54.97	64.62	75.86					
	P		5.65	5.93	6.14	6.29	6.39	6.44	6.46					
	Q	15℃	29.01	34.32	40.59	47.99	56.71	66.9						
	P		5.13	5.45	5.7	5.88	5.99	6.06						
	Q	10℃	29.38	34.98	41.6	49.42	58.61							
	P		4.77	5.14	5.42	5.62	5.76							
WW336HP-TFD-GV1	Q	65℃						64.64	71.92	80.59	90.86	102.91	116.96	133.20
	P							20.05	20.06	20.13	20.25	20.44	20.70	21.04
	Q	60℃					57.83	64.47	72.37	81.73	92.76	105.66	120.63	137.85
	P						17.94	17.93	17.94	17.99	18.10	18.25	18.47	18.76
	Q	55℃				51.46	57.51	64.70	73.23	83.30	95.10	108.85	124.74	142.97
	P					16.02	15.99	15.98	16.00	16.04	16.12	16.25	16.43	16.67
	Q	50℃			45.50	51.02	57.56	65.31	74.48	85.26	97.85	112.46	129.28	148.52
	P				14.23	14.23	14.22	14.23	14.24	14.27	14.33	14.43	14.57	14.76
	Q	45℃		39.92	44.98	50.92	57.96	66.29	76.10	87.60	100.99	116.46	134.23	154.48
	P			12.55	12.60	12.62	12.64	12.65	12.66	12.69	12.73	12.79	12.89	13.03
	Q	40℃	34.69	39.34	44.76	51.15	58.69	67.60	78.06	90.29	104.49	120.84	139.55	
	P		10.93	11.06	11.14	11.20	11.24	11.26	11.27	11.29	11.31	11.34	11.40	
	Q	35℃	34.10	39.05	44.84	51.67	59.73	69.22	80.36	93.32	108.33	125.57		
	P		9.58	9.75	9.88	9.97	10.02	10.05	10.07	10.07	10.07	10.08		
	Q	30℃	33.76	39.02	45.18	52.46	61.05	71.14	82.95	96.67	112.49			
	P		8.41	8.63	8.80	8.92	8.99	9.03	9.05	9.04	9.02			
	Q	25℃	33.65	39.22	45.77	53.51	62.63	73.33	85.82	100.30				
	P		7.42	7.70	7.90	8.05	8.15	8.20	8.21	8.20				
	Q	20℃	33.74	39.63	46.58	54.79	64.45	75.78	88.96					
	P		6.62	6.95	7.20	7.38	7.49	7.56	7.57					
	Q	15℃	34.02	40.24	47.59	56.28	66.49	78.44						
	P		6.02	6.39	6.68	6.89	7.03	7.10						
	Q	10℃	34.45	41.01	48.78	57.95	68.73							
	P		5.60	6.03	6.36	6.60	6.75							

注：以上数据基于 11.1K 吸气过热度，8.3K 过冷度
Note: The above data are based on 11.1K superheating and 8.3K subcooling

制热量 | Heating Capacity
R454B - EVI

型号 Model	项目 Item (KW)	Tc\Te	-25℃	-20℃	-15℃	-10℃	-5℃	0℃	5℃	10℃	15℃	20℃	25℃	30℃
WW430HP-TFD-GV1	Q	65℃						81.94	91.16	102.16	115.17	130.45	148.26	168.84
	P							25.41	25.43	25.51	25.67	25.91	26.24	26.67
	Q	60℃					73.31	81.72	91.73	103.6	117.59	133.93	152.9	174.74
	P						22.75	22.72	22.74	22.81	22.94	23.14	23.42	23.78
	Q	55℃				65.23	72.9	82.01	92.82	105.58	120.55	137.98	158.12	181.22
	P					20.3	20.27	20.26	20.28	20.34	20.44	20.6	20.83	21.13
	Q	50℃			57.67	64.67	72.96	82.79	94.41	108.07	124.03	142.55	163.87	188.26
	P				18.04	18.04	18.03	18.03	18.05	18.09	18.17	18.29	18.47	18.7
	Q	45℃		50.6	57.01	64.55	73.47	84.02	96.46	111.04	128.01	147.63	170.14	195.81
	P			15.91	15.97	16	16.02	16.03	16.05	16.08	16.13	16.22	16.34	16.52
	Q	40℃	43.97	49.87	56.74	64.83	74.39	85.68	98.95	114.46	132.44	153.17	176.9	
	P		13.86	14.02	14.13	14.2	14.24	14.27	14.29	14.31	14.33	14.38	14.45	
	Q	35℃	43.23	49.5	56.84	65.49	75.71	87.75	101.86	118.3	137.32	159.17		
	P		12.14	12.36	12.52	12.63	12.7	12.74	12.76	12.76	12.77	12.77		
	Q	30℃	42.8	49.46	57.27	66.5	77.38	90.18	105.15	122.53	142.59			
	P		10.65	10.94	11.15	11.3	11.4	11.45	11.47	11.46	11.44			
	Q	25℃	42.66	49.71	58.02	67.83	79.39	92.96	108.79	127.13				
	P		9.41	9.75	10.02	10.21	10.33	10.39	10.41	10.39				
	Q	20℃	42.77	50.24	59.05	69.45	81.7	96.05	112.76					
	P		8.4	8.81	9.12	9.35	9.5	9.58	9.6					
	Q	15℃	43.12	51.01	60.33	71.34	84.29	99.43						
	P		7.63	8.1	8.47	8.74	8.91	9						
	Q	10℃	43.67	51.99	61.83	73.46	87.12							
	P		7.1	7.64	8.06	8.36	8.56							
WW520HP-TFD-GV1	Q	65℃						101.24	112.64	126.22	142.29	161.18	183.18	208.61
	P							31.4	31.42	31.52	31.72	32.01	32.42	32.95
	Q	60℃					90.58	100.96	113.34	128.01	145.28	165.48	188.92	215.9
	P						28.1	28.07	28.1	28.18	28.34	28.59	28.93	29.38
	Q	55℃				80.6	90.07	101.33	114.68	130.45	148.95	170.48	195.36	223.91
	P					25.09	25.05	25.03	25.06	25.13	25.25	25.45	25.73	26.1
	Q	50℃			71.26	79.91	90.15	102.29	116.64	133.53	153.25	176.13	202.47	232.6
	P				22.29	22.28	22.28	22.28	22.3	22.35	22.45	22.6	22.82	23.11
	Q	45℃		62.52	70.44	79.75	90.77	103.81	119.18	137.19	158.16	182.4	210.22	241.93
	P			19.65	19.73	19.77	19.79	19.81	19.83	19.87	19.93	20.04	20.19	20.41
	Q	40℃	54.33	61.62	70.11	80.1	91.92	105.87	122.26	141.41	163.64	189.25	218.56	
	P		17.12	17.32	17.45	17.54	17.6	17.63	17.65	17.68	17.71	17.76	17.85	
	Q	35℃	53.41	61.16	70.23	80.92	93.54	108.41	125.85	146.16	169.66	196.66		
	P		15	15.27	15.47	15.61	15.69	15.74	15.77	15.77	15.77	15.78		
	Q	30℃	52.88	61.11	70.77	82.16	95.61	111.42	129.91	151.39	176.18			
	P		13.16	13.52	13.78	13.96	14.08	14.15	14.17	14.16	14.13			
	Q	25℃	52.7	61.42	71.69	83.8	98.09	114.85	134.41	157.08				
	P		11.62	12.05	12.38	12.61	12.76	12.84	12.86	12.84				
	Q	20℃	52.85	62.07	72.96	85.81	100.94	118.68	139.32					
	P		10.37	10.88	11.27	11.55	11.74	11.83	11.86					
	Q	15℃	53.28	63.02	74.54	88.14	104.14	122.85						
	P		9.42	10.01	10.46	10.79	11.01	11.12						
	Q	10℃	53.96	64.24	76.4	90.76	107.64							
	P		8.77	9.44	9.95	10.33	10.58							

注：以上数据基于 11. 1K 吸气过热度，8. 3K 过冷度
Note: The above data are based on 11.1K superheating and 8.3K subcooling

WW28KE-WW61KE;WW28KP-WW81KP;WW28KR-WW81KR;WW50HP-WW150HP

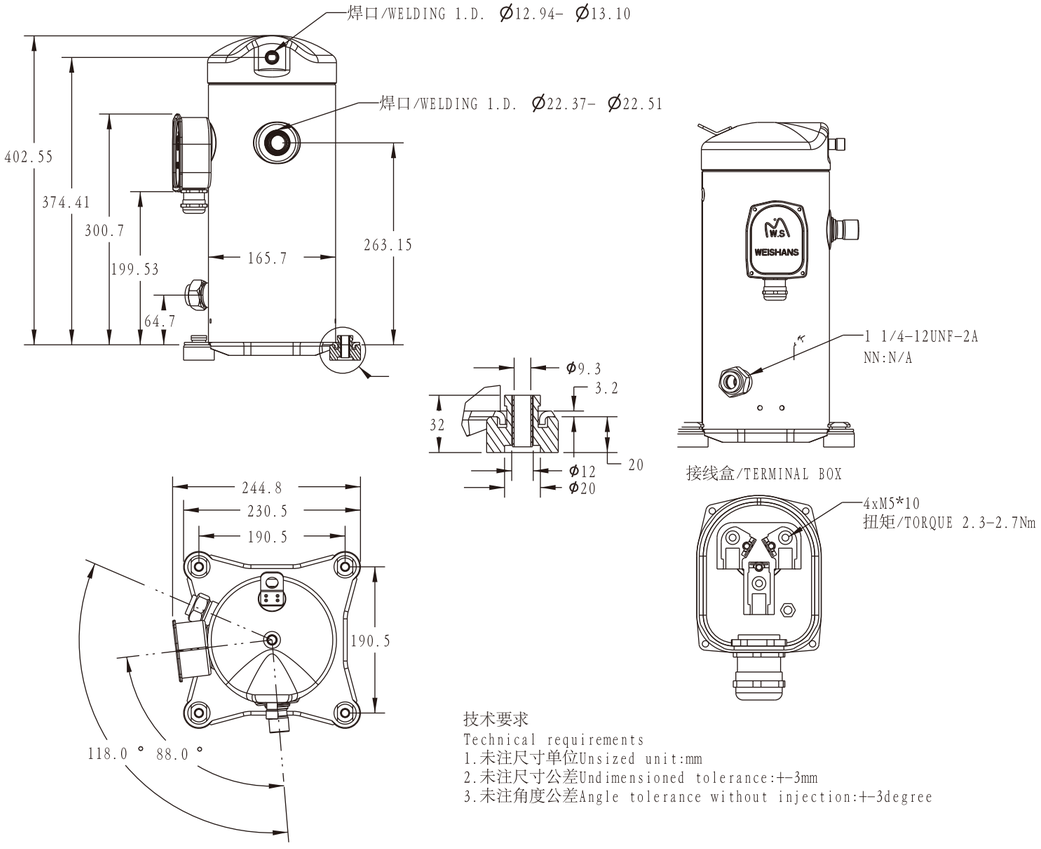

技术要求
Technical requirements
1.未注尺寸单位Unsized unit:mm
2.未注尺寸公差Undimensioned tolerance:+-3mm
3.未注角度公差Angle tolerance without injection:+-3degree

EVI(WW28KE-WW48KE;WW28KP-WW81KP;WW28KR-WW81KR;WW50HP-WW150HP)

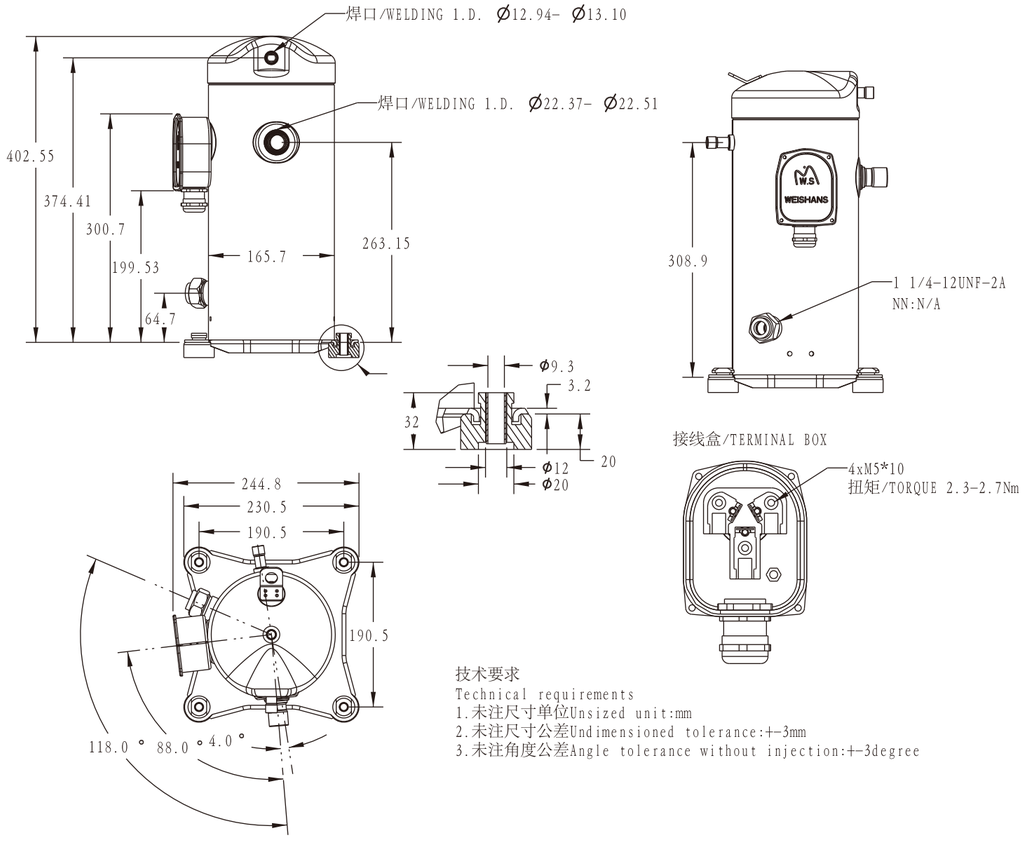

技术要求
Technical requirements
1.未注尺寸单位Unsized unit:mm
2.未注尺寸公差Undimensioned tolerance:+-3mm
3.未注角度公差Angle tolerance without injection:+-3degree

Dimensional

WW72KE-WW81KE;WW94KP-WW120KP;WW94KR-WW120KR;WW170HP-WW220HP

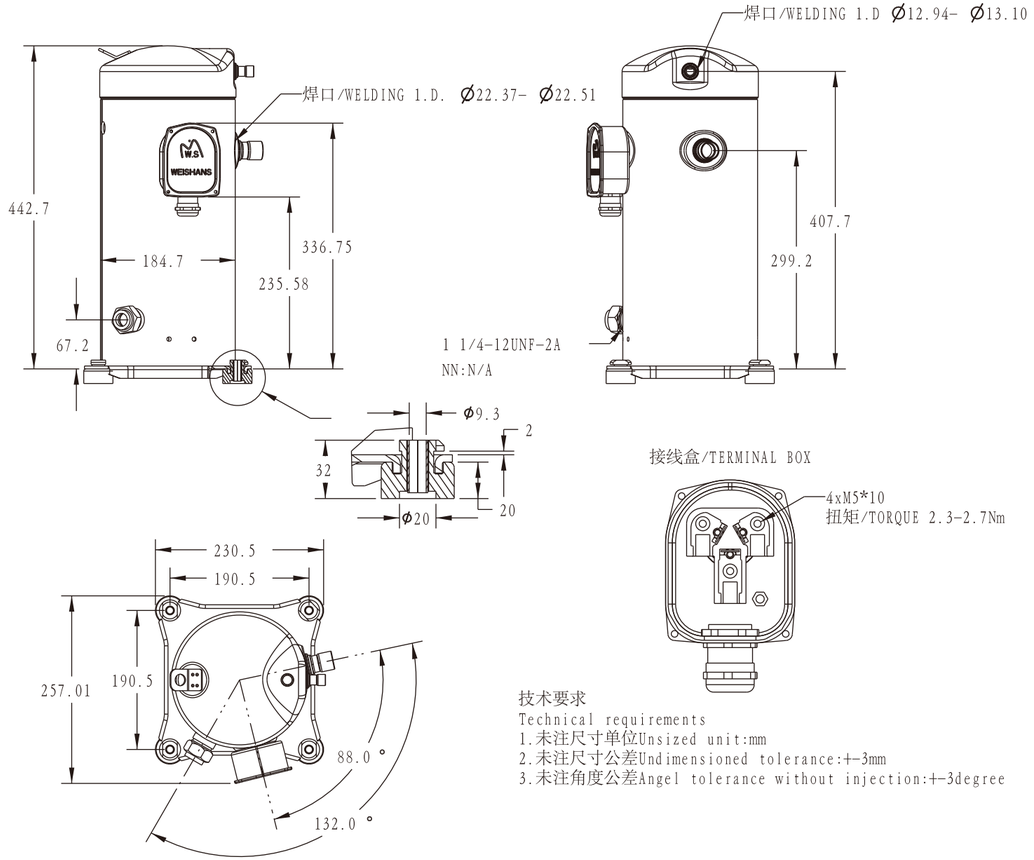

技术要求
Technical requirements
1.未注尺寸单位Unsized unit:mm
2.未注尺寸公差Undimensioned tolerance:+-3mm
3.未注角度公差Angel tolerance without injection:+-3degree

Dimensional

EVI(WW61KE-WW81KE;WW94KP-WW120KP;WW94KR-WW120KR;WW170HP-WW220HP)

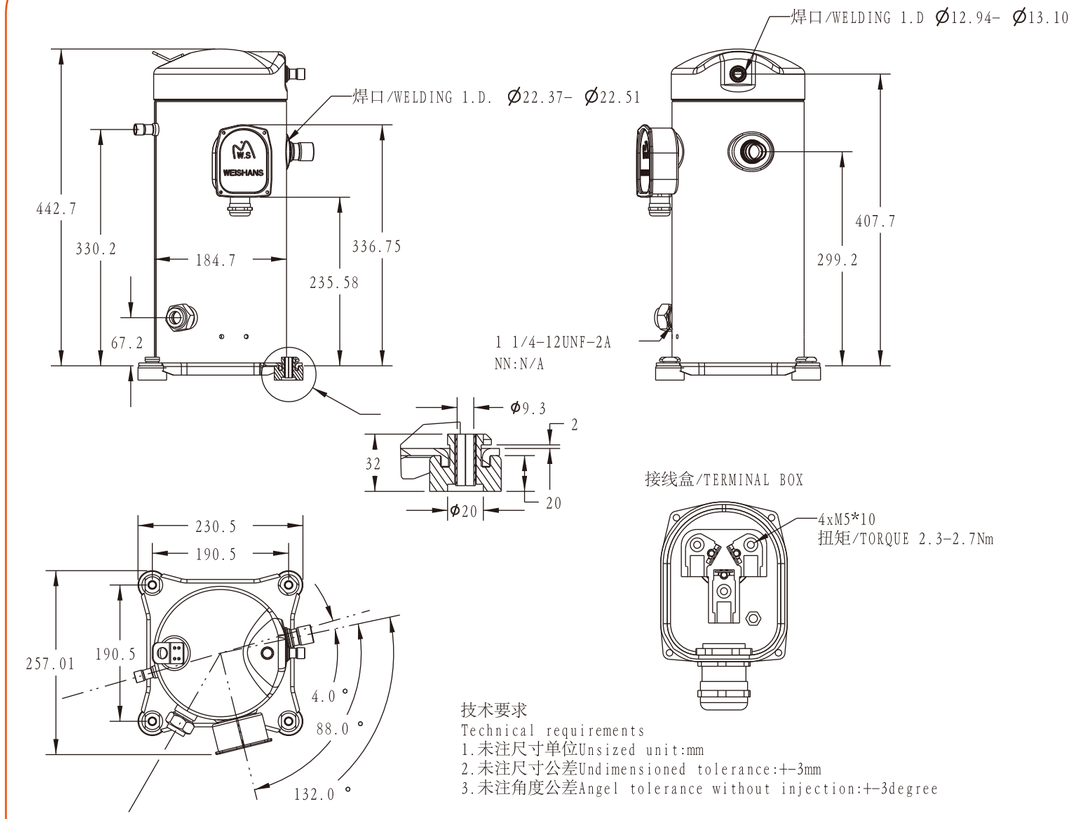

技术要求
Technical requirements
1.未注尺寸单位Unsized unit:mm
2.未注尺寸公差Undimensioned tolerance:+-3mm
3.未注角度公差Angel tolerance without injection:+-3degree

WW94KE-WW125KE;WW138KP-WW170KP;WW138KR-WW170KR;WW258HP-WW336HP

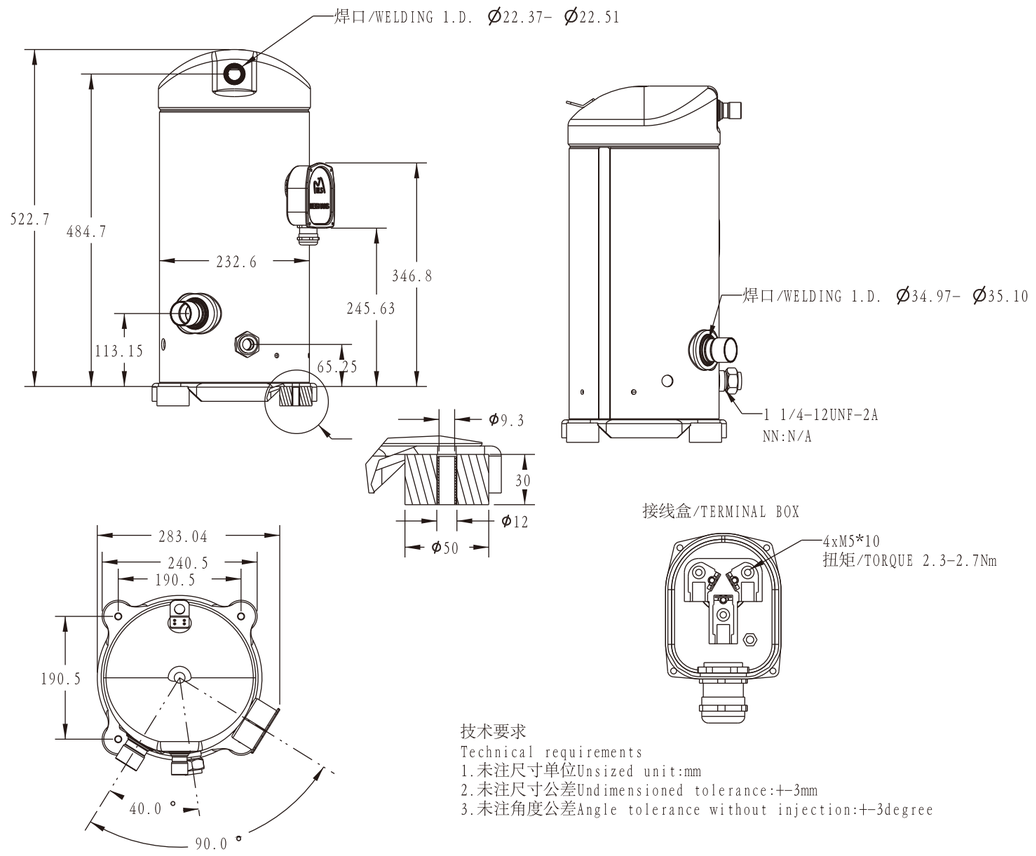

技术要求
Technical requirements
1.未注尺寸单位Unsized unit:mm
2.未注尺寸公差Undimensioned tolerance:+-3mm
3.未注角度公差Angle tolerance without injection:+-3degree

EVI(WW94KE-WW125KE;WW138KP-WW170KP;WW138KR-WW170KR;WW258HP-WW336HP)

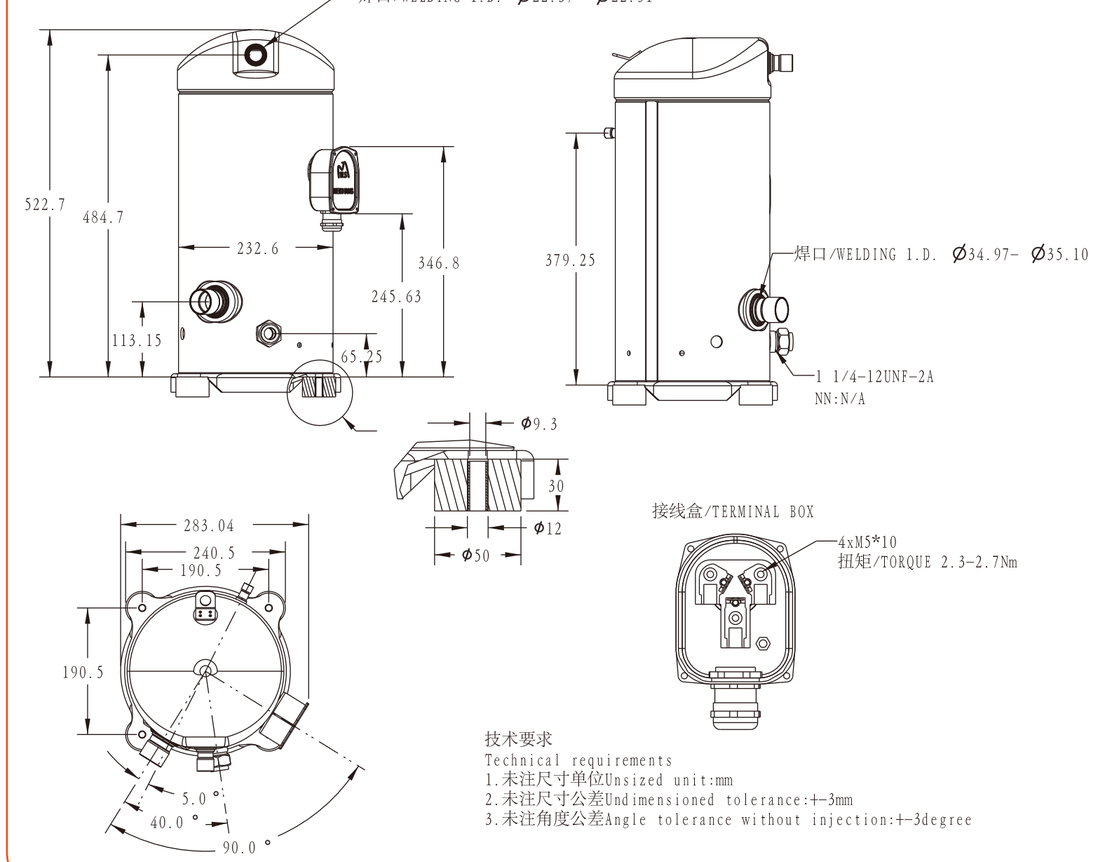

技术要求
Technical requirements
1.未注尺寸单位Unsized unit:mm
2.未注尺寸公差Undimensioned tolerance:+-3mm
3.未注角度公差Angle tolerance without injection:+-3degree

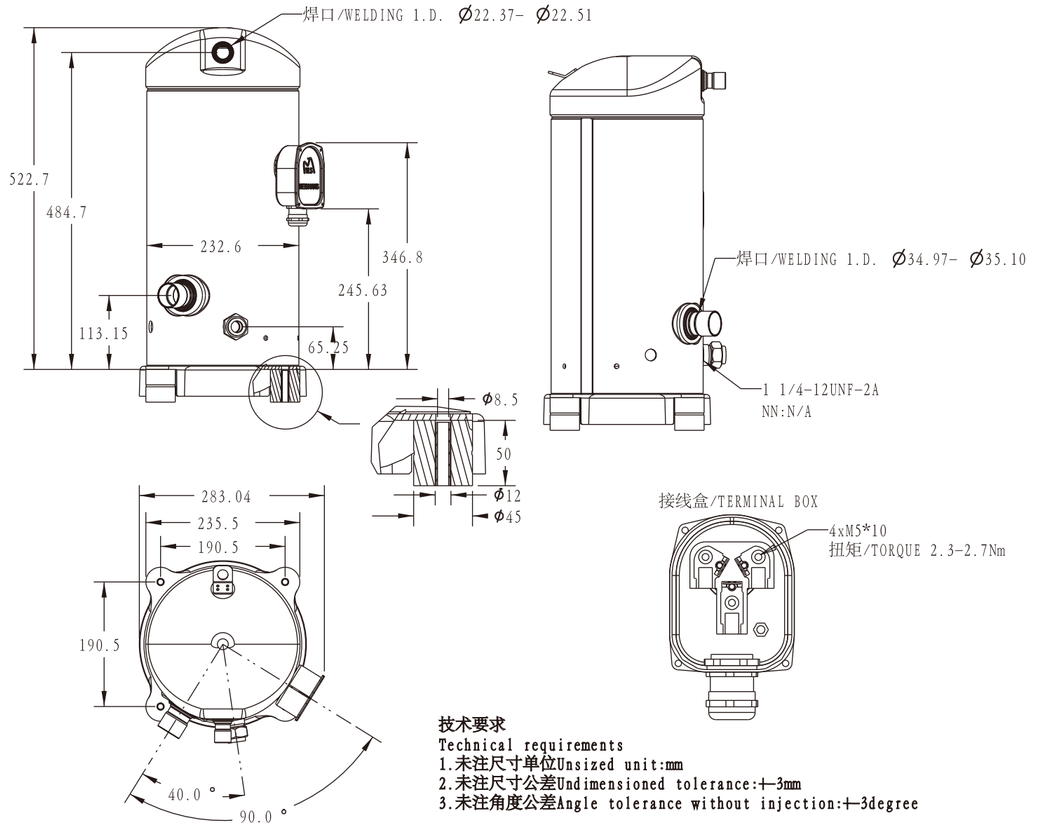

技术要求
Technical requirements
1.未注尺寸单位Unsized unit:mm
2.未注尺寸公差Undimensioned tolerance:+-3mm
3.未注角度公差Angle tolerance without injection:+-3degree

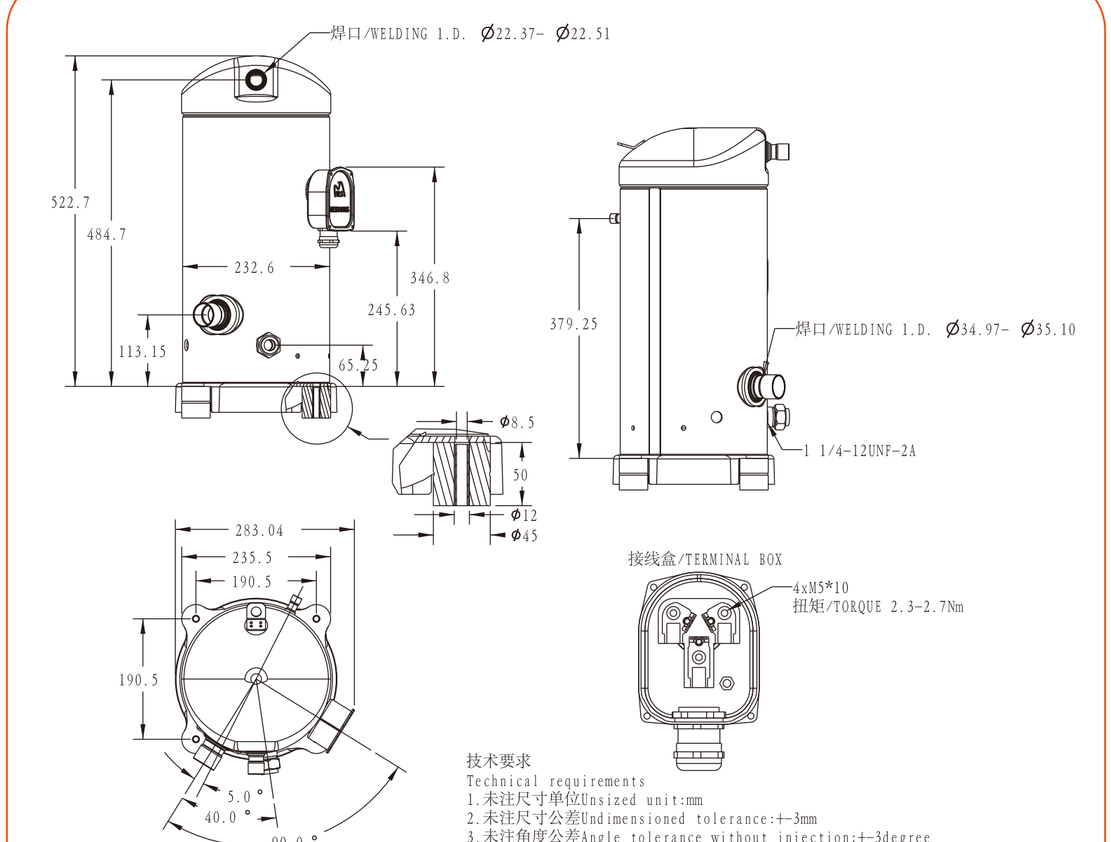

技术要求
Technical requirements
1.未注尺寸单位Unsized unit:mm
2.未注尺寸公差Undimensioned tolerance:+-3mm
3.未注角度公差Angle tolerance without injection:+-3degree

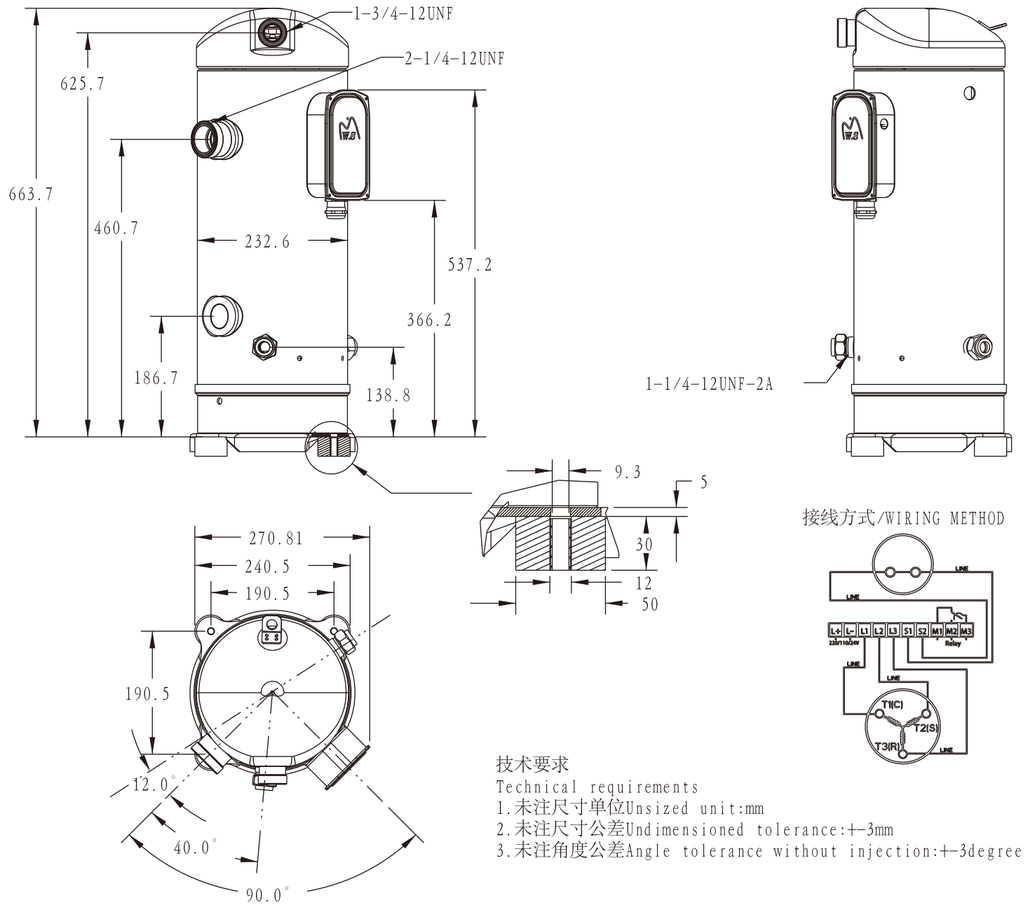
1-3/4-12UNF
2-1/4-12UNF
625.7
663.7
460.7
232.6
537.2
366.2
186.7
138.8
1-1/4-12UNF-2A
9.3
5
30
12
50
270.81
240.5
190.5
190.5
12.0°
40.0°
90.0°
接线方式/WIRING METHOD
技术要求
Technical requirements
1.未注尺寸单位Unsized unit:mm
2.未注尺寸公差Undimensioned tolerance:+-3mm
3.未注角度公差Angle tolerance without injection:+-3degree

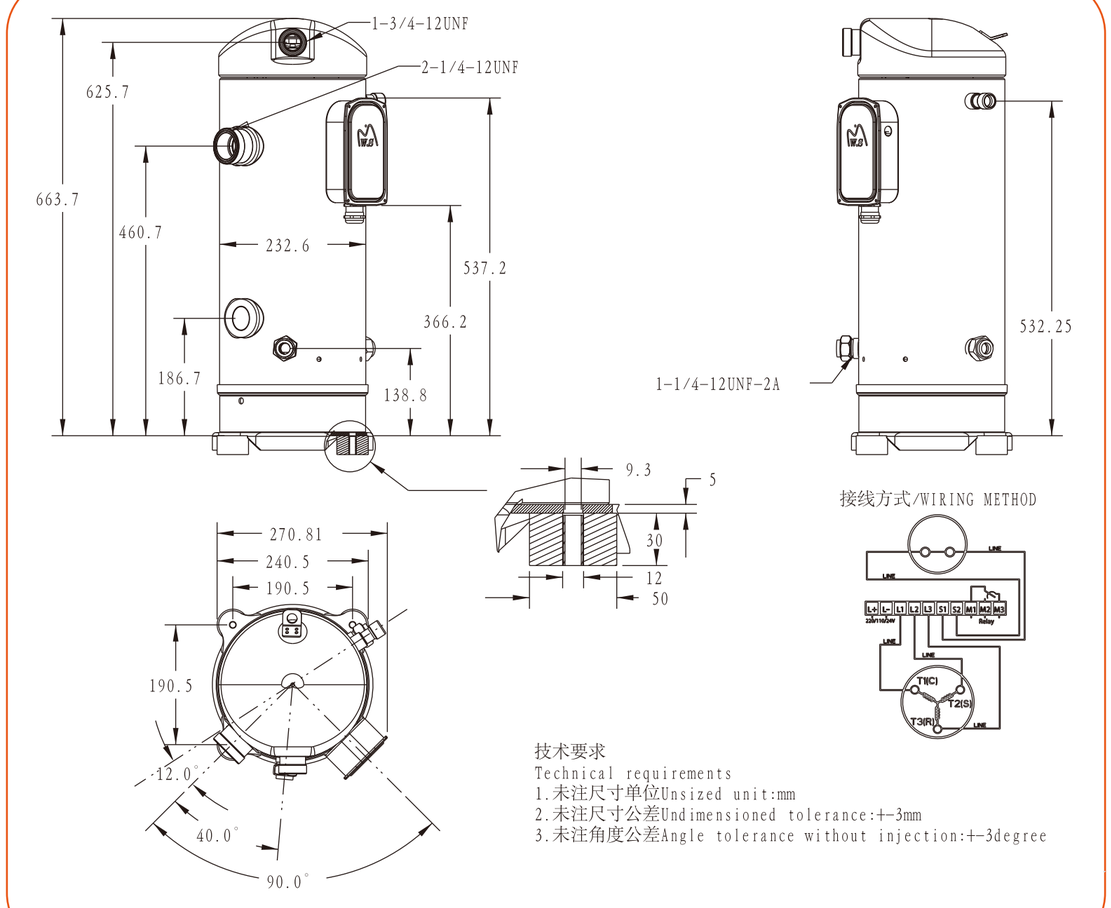
1-3/4-12UNF
2-1/4-12UNF
625.7
663.7
460.7
232.6
537.2
366.2
186.7
138.8
532.25
1-1/4-12UNF-2A
9.3
5
30
12
50
270.81
240.5
190.5
190.5
12.0°
40.0°
90.0°
接线方式/WIRING METHOD
技术要求
Technical requirements
1.未注尺寸单位Unsized unit:mm
2.未注尺寸公差Undimensioned tolerance:+-3mm
3.未注角度公差Angle tolerance without injection:+-3degree

接线图示 Wiring Diagram

WW250KE-WW300KE;WW235KP-WW292KP;WW430HP-WW520HP EVI(WW250KE-WW300KE;WW235KP-WW292KP;WW430HP-WW520HP)

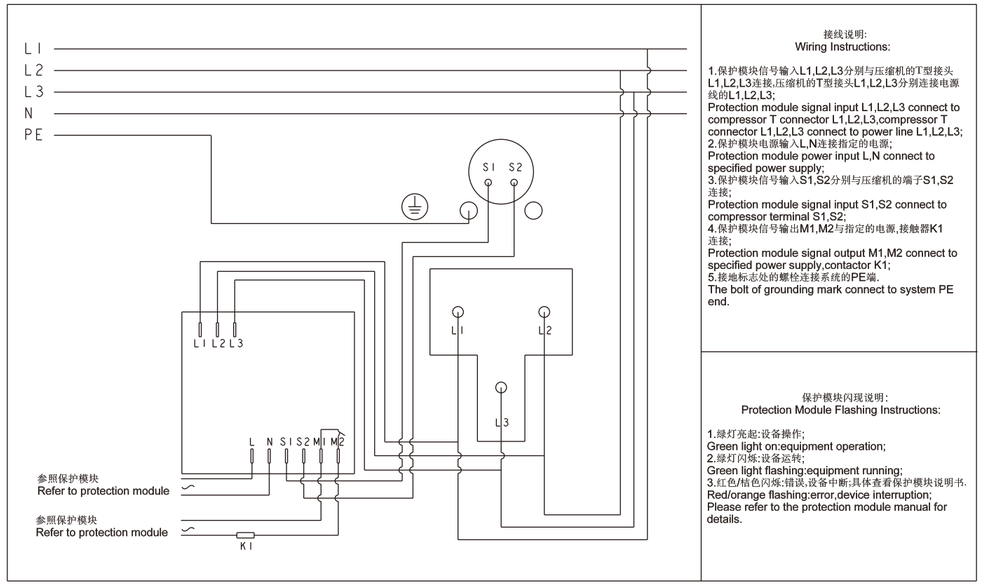

接线说明:
Wiring Instructions:

1.保护模块信号输入L1,L2,L3分别与压缩机的T型接头L1,L2,L3连接,压缩机的T型接头L1,L2,L3分别连接电源线的L1,L2,L3;
Protection module signal input L1,L2,L3 connect to compressor T connector L1,L2,L3,compressor T connector L1,L2,L3 connect to power line L1,L2,L3;
2.保护模块电源输入L,N连接指定的电源;
Protection module power input L,N connect to specified power supply;
3.保护模块信号输入S1,S2分别与压缩机的端子S1,S2连接;
Protection module signal input S1,S2 connect to compressor terminal S1,S2;
4.保护模块信号输出M1,M2与指定的电源,接触器K1连接;
Protection module signal output M1,M2 connect to specified power supply,contactor K1;
5.接地标志处的螺栓连接系统的PE端.
The bolt of grounding mark connect to system PE end.

保护模块闪现说明:
Protection Module Flashing Instructions:

1.绿灯亮起:设备操作;
Green light on:equipment operation;
2.绿灯闪烁:设备运转;
Green light flashing:equipment running;
3.红色/桔色闪烁:错误,设备中断;具体查看保护模块说明书.
Red/orange flashing:error,device interruption;
Please refer to the protection module manual for details.

为山® 涡旋压缩机

WEISHANS SCROLL COMPRESSOR

2HP-25HP

致力于为客户提供绿色环保的空调，冷水机，热泵及冷冻冷藏解决方案

We are committed to providing our customers with environmentally friendly air conditioning, chillers, heat pumps, and refrigeration solutions

WEISHANS
Climate Technologies
为山 · 涡旋压缩机