联系我们 / Contact Us

公司名称：苏州为山之环境技术有限公司

Suzhou Weishans Climate Technologies Co.,Ltd

公司官网 / **Web:www.weishans.com**

地址：江苏省苏州市相城区黄埭镇咏春科技园

Address：Yongchun Science and Technology Park, Huangdai Town, Xiangcheng District, Suzhou City, Jiangsu Province

联系人Contact：王先生Mr.Wang:13771888067，李先生Mr.Li:15995875226，陈女士Ms.Chen:13640429967，王先生Mr.Wang:18896534978

免责声明

技术数据在印刷前已经校对过，印刷之后有再更新的可能。如有对某一参数确认的需求，请联系苏州为山之环境技术有限公司。为山之对参数中可能存在的差错概不承担任何责任，为山之保留自行改变其产品而不预先通知的权利。

Disclaimer

Our technical data have been checked before printing, but it is possible for data to be updated after printing. If you need to confirm a certain parameter, please contact Suzhou Weishans Climate Technology Co., Ltd. Weishans will not take any responsibilities for any possible errors in the parameters and reserve the right to change its products without prior notice.

Rev:202610

WEISHANS
Climate Technologies
为山 · 涡旋压缩机

高能效涡旋压缩机

High Energy Efficiency Scroll Compressor

热泵烘干应用产品手册

Product Manual For Heat Pump & Stoving Application

苏州为山之环境技术有限公司

Suzhou Weishans Climate Technologies Co.,Ltd

为山者

积土成山，事当有为不为

为山者，当以九仞为目标，坚韧前行

居谷不弃，据高无傲，以余力尽余志

为山者，当持仁心，聚仁人志士以作为

仁德宽厚，虚怀若谷，度己度人，度可度之人

为山者智而不乱智，谋而不全谋

为山者实为治军，将即将，身先士卒，令必行，士必勤勇，功当巨赏

为山者胜于人，乃心胜于人，非物胜于人也

为山者，虽积跬步箕土，乃成伟山

WEISHANS

To build mountain with small amounts of earth, You would select what to do and what not to do.

To be WEISHANS, You should have a high goal, go forward no matter what difficulty to meet,No give up when you low, No pride when you high, Do what you can do for the capable goal.

To be WEISHANS, You should have a heart like god, Collect kind and upright men to do something right, kind god feeling to others , mind breadth, sublime oneself and others ,and sublime the men who will sublime.

To be WEISHANS, should be smart but only smart on the right direction, and have astuteness on the right place.

To be WEISHANS, Just like build an army, General should be exactly like a leader with active and positive Behavior, order must have good result and active feedback, soldiers must be active to order and work hard, great reward for great job.

To be WEISHANS, They defeat others, They are so strong in mind not on the treasure.

To be WEISHANS, Even with small steps to reach peak , Even collect small earth to build great mountain.

WEISHANS
Climate Technologies

目录Catalog

公司简介 *About us* 01

产品特点 *About Product* 04

关键技术及创新 *Characters and Advantages* 05

命名规则 *Nomenclature* 07

应用范围 *Application Range* 08

技术参数 *Specification* 09

制热量 *Heating Capacity* 21

外形尺寸 *Dimensional Information* 63

苏州为山之环境技术有限公司

苏州为山之环境技术有限公司成立于 2018 年 6 月，坐落于工业发达的历史名城苏州，专注于开发节能环保型压缩机，是一家创新型科技企业。为山之研发的涡旋式热泵压缩机核心技术已取得重大突破，并成功应用于多个领域，包括但不限于工业制冷、商用热水、工业蒸汽、农业烘干、制冷工程、精密空调、轨道交通制冷、转轮除湿及工业余热回收等。

公司研发的系列热泵蒸汽涡旋压缩机以及国内率先推出的防爆系列涡旋压缩机，显著拓展了涡旋压缩机的应用范围。公司自主研发的强力增焓技术也进一步扩大了压缩机的运行范围，使得在常温条件下使用同一工质实现高效蒸汽成为现实。

公司拥有先进的自动化生产线和高精度检测与加工设备，创新工艺流程，具备年产 10 万台涡旋压缩机的组装生产能力，产品覆盖从 2 匹至 25 匹。公司产品通过了 CCC、CE、CB、ROHS & REACH 和 ISO 9001 等多项国际认证。

公司高度重视知识产权保护，至今已申请 41 项知识产权，其中包括 13 项发明专利（5 项已获授权）、27 项实用新型专利（21 项已获授权）和 1 项软件著作权。公司荣获江苏省民营科技企业和国家级高新技术企业称号。

公司注重质量管理体系和信息化建设，秉持以人为本的理念，组建了一支具有竞争力的人才队伍，激发员工的积极性和创造力，不断提高运营效率。公司秉承创新、诚信的理念，致力于为客户创造更多价值，携手实现共赢。

展望未来，公司将继续加大研发投入，致力于为客户提供绿色环保的热泵及冷冻压缩机解决方案，以减少全球碳排放为使命，为构建绿色地球家园贡献力量。

www.weishans.com

Suzhou Weishans Climate Technologies Co., Ltd

Suzhou Weishans Climate Technology Co., Ltd was established in June 2018, it is located in Suzhou with developed industry and long history city, and focuses on the development of energy-saving and environment protection compressors. It is an innovative technology enterprise. The core technology of the scroll heat pump compressors developed by Weishans has made significant breakthroughs and has been successfully applied in multiple fields, including but not limited to industrial refrigeration, commercial hot water, industrial steam, agricultural drying, refrigeration engineering, precision air conditioning, rail transit refrigeration, rotary wheel dehumidification and industrial waste heat recovery, etc.

The series of heat pump steam scroll compressors developed by the company and the explosion-proof series of scroll compressors first launched in China have significantly expanded the application range of scroll compressors. The company's independently developed strong enthalpy increase technology has also further expanded the operating range of the compressor, making it possible to achieve efficient steam using the same working fluid under normal temperature conditions.

The company owns advanced automated production lines and high-precision testing and machining equipments, innovated technological process, and has an annual assembly production capacity of 100,000 scroll compressors, with products covering the range from 2HP to 25HP. The company's products have passed multiple international certifications including CCC, CE, CB, ROHS & REACH and ISO 9001.

The company attaches great importance to the protection of intellectual property rights and has applied for 41 intellectual property rights so far, including 13 invention patents (5 have been authorized), 27 utility model patents (21 have been authorized) and 1 software copyright. The company has been awarded the titles of Jiangsu Private Technology Enterprise and National High-tech Enterprise.

The company attaches great importance to the quality management system and information construction, adheres to the people-oriented concept, and has formed a competitive talent team to stimulate the enthusiasm and creativity of employees and continuously improve operational efficiency. The company adheres to the concepts of innovation and integrity, and is committed to creating more value for customers and achieving win-win results together.

Looking forward to the future, the company will continue to increase investment in research and development, and is committed to providing customers with green and environmentally heat pump and refrigeration compressor solutions. With the mission of reducing global carbon emissions, it will contribute to building a green Earth home.

OUR VISION

企业愿景

为山之遵循“求精不求巧，求本不求华”的产品理念，把“为山”打造成国内外知名品牌。

WE AIM TO MAKE “WEISHAN” THE FIRST-CLASS INTERNATIONAL BRAND. WE ALWAYS FOLLOW THE THINKING “TO ACHIEVE PERFECTION WITHOUT INGENUITY, SEEKING FOR ORIGIN WITHOUT REFINEMENT.”

OUR MISSION

企业使命

以“九仞”为目标，坚韧前行；居谷不弃，据高无傲！

“JIUREN” IS OUR AIM. WE WILL MOVE FORWARD TOUGHLY. WE WILL NEVER GIVE UP EVEN IN DOWNS AND NEVER BE ARROGANT WHEN IN UPS.

SERVICE AIM

服务宗旨

顾客第一、品质第一、服务第一、持续改进、回报社会

CUSTOMERS FIRST, QUALITY FIRST, SERVICE FIRST,KEEPING IMPROVING, REPAYING SOCIETY

ABOUT PRODUCT
产品特点

“为山”牌涡旋压缩机性能优良，突出的特点有：

1. 国产替代：拥有自主知识产权，且与国外知名企业的同等技术水平的产品具有良好的互换性。
2. 重点开发的中高功率范围12匹及以上的全封闭压缩机新产品，获得良好的市场应用口碑。
3. 针对不同的冷媒设计多种涡旋盘，适用范围广，WW系列压缩机在烘干机组上冷凝温度最高可达85摄氏度。
4. 能效比高，入围北极熊创新产品奖前三甲，是节能机组产品。

"Weishan" brand scroll compressors have excellent performance, and the outstanding features are as below:

1. Localization substitution: independent intellectual property rights; good interchangeability with products of the same technical level as well-known foreign companies.

2. Stress-developed ≥12HP hermetic compressors in the medium and high power range and get good market application reputation.

3. The products are designed with multiple scrolls for different refrigerants and have a wide application range. The condensing temperature of WW series can reach 85℃ on the drying unit.

4. The products have high energy efficiency ratio are selected in the top three of the Polar Bear Innovative Product Award and are the energy-saving units.

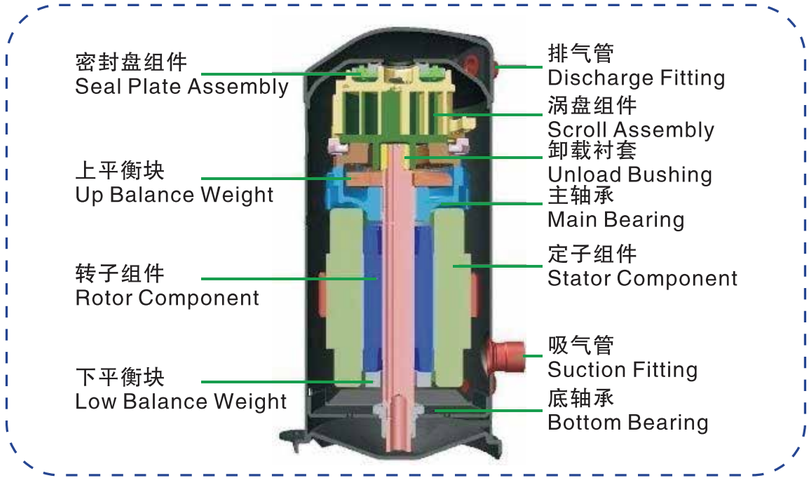

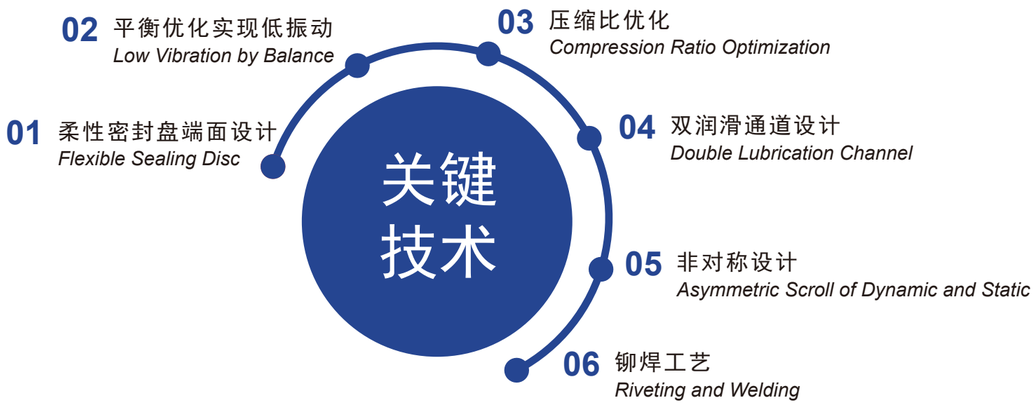

关键技术及创新
Characters and Advantages

关键技术及创新 CHARACTERS AND ADVANTAGES

为山之的涡旋压缩机为热泵，空调，冷水机及冷冻冷藏等应用提供了出众的解决方案，涡旋压缩机是高可靠性，高能效比，紧凑性系统设计的理想选择。为山系列涡旋压缩机可提供2~25HP的产品，其适用的制冷剂包括R410A, R22, R407C, R134a等

Weishans'scroll compression technology provide an outstanding solution for Heat pump, air conditioner, chiller and refrigeration applicaiton. Scroll compressors are an ideal choice with high reliability, high EER and compact system design. The scroll compressors of Weishan series can provide 2HP~25HP products, the applicable refrigerants include R410A, R22,R407C, R134a ETC.

制热量数据 *Capacity Data*

本样本所列压缩机制冷量数据，电源频率50Hz（电机同步转速2900rpm）。当压缩机在60Hz频率（电机转速3500rpm）运行时，制冷量以及输入功率相应约增加20%。压缩机不宜在应用范围外使用。

The capacity data of scroll compressors listed in this catalogue, power frequency is 50 Hz (Synchronous speed of motor 2900 rpm). When the compressors are operated with 60Hz (the speed of motor 3500 rpm), the capacity and input power are correspondingly increased about 20%. The compressors should not be used beyond the application range.
Cooling capacity data of compressor listed in this sample, power frequency: 50Hz(synchronous motor speed: 2900rpm

命名规则

Nomenclature

命名规则 NOMENCLATURE

压缩机标称能力代码
通常（不包括R410A喷气机型）
表示在60Hz，ARI工况下制冷量，
单位：Btu/Hr
仅R410A喷气增焓机型
表示在50Hz，-20/55℃工况下制热量，
单位：W

润滑方式代码
M-矿物油R22
E-32#POE/R404A/R407C
F-68#POE/R134等
P-32#POE/R410A
B-120#POE/
R142b/R245fa/R1233zd等
R-68#POE/R32

电源代码
P-380V 50Hz
T-380V 60Hz
J-220-240V 50Hz
D-460V-3 60Hz/380-420V-3 50Hz
V-220V-1 50Hz/208-230V-1 60Hz
5-200-220V-3 50Hz/200-230V-3 60Hz

连接代码
N-无视液镜；焊接口
G-有视液镜；焊接口
S-有视液镜；螺纹口

压缩机家族序列代码
R-空调
B-中温冷藏应用
W-热泵热水应用
F-低温冷冻应用
H-特种高温应用

能力系数代码
H*100
K*1000
M*10000

电机相数代码
T-三相
P-单相

冷却方式
N-无配置
V-喷气增焓
L-喷液
X-喷气+喷液

电机保护方式代码
F-内置保护器
W-外置保护器
X-无电机保护器

配置代码
1-标准配置
2-车载空调系列
3-客户特殊定制系列
X-配置可燃冷媒，如R290等

系列代码
W-为山系列

WW 138 K E - T F D - G N 1

R410A喷气增焓机型/R410A with EVI:

WW 286 H P - T F D - G V 1

Series Code
W-Weishan Series

Motor Protection
F-Internal Protector
W-External Protector
X-None

Model Code
1-Standard Configuration
2-Automotive A/C Series
3-Customized Client Series
X-For flammable refrigerants, Such as R290

Compressor Family Series
R-Air Conditioning
B-Medium Temperature Refrigeration
W-Heat Pump for Heating Water
F-Low Temperature Freezing
H- Special High Temperature

Capacity Multiplier
*H*100*
*K*1000*
*M*10000*

Motor Phase
T-Three Phase
P-Single Phase

Cooling Model
N-None
V-Vapor Injection
L-Liquid Injection
X-Vapor+Liquid Injection

Compressor Nominal Capability Code
Usually (eccluding R410A with EVI model) ARI Operating at 60Hz, Unit:Btu/Hr
R410A with EVI :
Nominal Capabilityat 50Hz，-20/55℃，Unit:W

Lubrication Oil
M-R22 Mineral Oil
E-32#POE/R404A/R407C
F-68#POE/R134,etc
P-32#POE/R410A
B-120#POE/
R142b/R245fa/R1233zd,etc
R-68#POE/R32

Power
P-380V 50Hz
T-380V 60Hz
J-220-240V-1 50Hz
D-460V-3 60Hz/380-420V-3 50Hz
V-220V-1 50Hz/208-230V-1 60Hz
5-200-220V-3 50Hz/200-230V-3 60Hz

Fitting Connection Code
N-None and Welding Joint
G-Sight Glasses and Welding Joint
S-Sight Glasses and Solenoid Joint

应用范围

Application Range

应用范围 APPLICATION RANGE

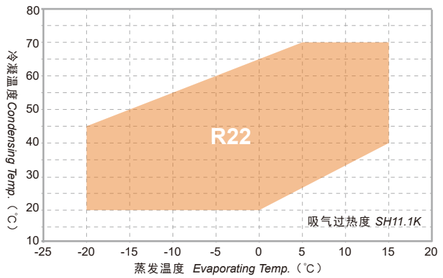

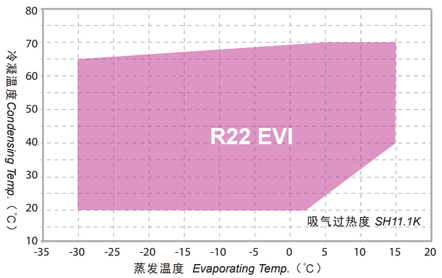

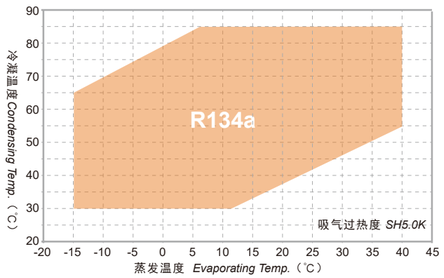

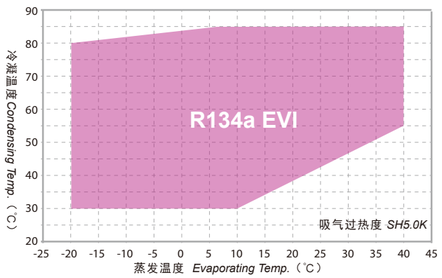

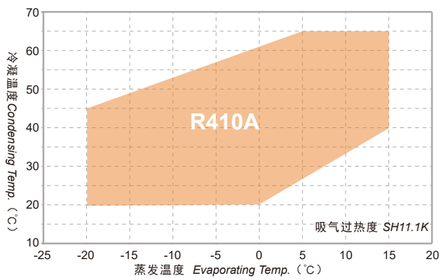

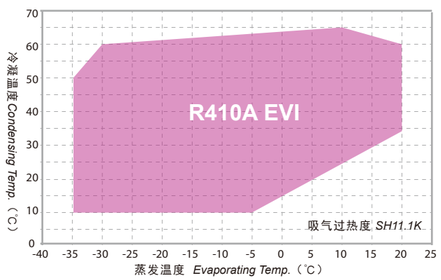

技术参数
Specifications

技术参数 SPECIFICATIONS

WW — **R22**
不带喷气增焓 *W/O EVI*

型号 Model		WW24KM-TFD-GN1	WW34KM-TFD-GN1	WW48KM-TFD-GN1	WW61KM-TFD-GN1	WW72KM-TFD-GN1	WW79KM-TFD-GN1	WW94KM-TFD-GN1	WW108KM-TFD-GN1
电制 Motor Power		380-420V/3~/50Hz or 460V/3~/60Hz							
名义功率 Nominal Power (HP)		2	3	4	5	6	7	8	9
排量 Displacement (cc/Rev)		32.3	50.6	63.9	84.5	98.9	108	127	147.7
制冷剂 Refrigerant		R22							
名义制热量 Nominal Capacity (W)		7077	11090	14005	18520	21670	23660	27822	32357
名义输入功率 Nominal Power (W)		1781	2790	3524	4660	5450	5950	6997	8137
名义工况能效比 COP (W/W)		3.97	3.97	3.97	3.97	3.98	3.98	3.98	3.98
名义工况电流 Nominal Operating Current (A)		3.3	5.0	6.3	8.4	9.6	11.2	14.2	15.5
堵转电流 LRA (A)		38.8	38.8	38.8	59.3	83.6	83.6	117	117
最大运行电流 MOC (A)		4.5	6.8	8.6	12.7	14.5	17.1	20.1	21.7
曲轴箱加热器功率 Crankcase Heater (W)		70					90		
接管尺寸 Fitting ID Size (mm)	排气管 Dis.Tube	12.94-13.10						22.37-22.51	
	吸气管 Suc.Tube	22.37-22.51						34.97-35.10	
外形尺寸 Dimension (mm)	长(L)	244.8			257.01			283.04	
	宽(W)	230.5			230.5			240.5	
	高(H)	402.55			442.7			522.7	
底脚安装尺寸 Mounting Dimensions（mm）		190.5x190.5							
润滑油类型 Lubrication Oil		3GS							
润滑油初次充注量 Lubrication Oil Initial Charge (L)		1.4	1.4	1.4	1.4	1.8	1.8	3	3
润滑油重新充注量 Lubrication Oil Recharge (L)		1.2	1.2	1.2	1.2	1.6	1.6	2.8	2.8
最大工作压力 Maxium Operating Pressure (MPa)	高压侧 High Pressure Side	3							
	低压侧 Low Pressure Side	2							
重量 Weight (kg)		28	28	28	31	38	38	66	66

注：蒸发5. 0˚C, 冷凝55. 0˚C, 过热11. 1K, 过冷8. 3K, 环温35. 0˚C
Note: Evaporating Temperature 5.0˚C, Condensing Temperating 55.0˚C, Superheating 11.1K, Subcooling 8.3K, Ambient Temperating 35.0˚C

R22 — **WW**
不带喷气增焓 *W/O EVI*

技术参数
Specifications

技术参数 SPECIFICATIONS

型号 Model		WW125KM-TFD-GN1	WW138KM-TFD-GN1	WW154KM-TFD-GN1	WW170KM-TFD-GN1	WW250KM-TWD-GN1	WW300KM-TWD-GN1
电制 Motor Power		380-420V/3~/50Hz or 460V/3~/60Hz					
名义功率 Nominal Power (HP)		10	12	13	15	20	25
排量 Displacement (cc/Rev)		166.1	190.8	209	248.9	325	400
制冷剂 Refrigerant		R22					
名义制热量 Nominal Capacity (W)		36395	41807	45795	54538	71212	87646
名义输入功率 Nominal Power (W)		9161	10523	11527	13727	17925	22061
名义工况能效比 COP (W/W)		3.97	3.97	3.97	3.97	3.97	3.97
名义工况电流 Nominal Operating Current (A)		16.4	18.6	20.2	24.0	31.3	40.9
堵转电流 LRA (A)		117	117	117	117	304	304
最大运行电流 MOC (A)		24.4	27.6	30.2	31.9	41.7	52
曲轴箱加热器功率 Crankcase Heater (W)		90					
接管尺寸 Fitting ID Size (mm)	排气管 Dis.Tube	22.37-22.51				28.81-28.95	
	吸气管 Suc.Tube	34.97-35.10				34.97-35.10	
外形尺寸 Dimension (mm)	长(L)	283.04	283.04			270.81	
	宽(W)	240.5	235.5			240.5	
	高(H)	522.7	522.7			663.7	
底脚安装尺寸 Mounting Dimensions（mm）		190.5x190.5					
润滑油类型 Lubrication Oil		3GS					
润滑油初次充注量 Lubrication Oil Initial Charge (L)		3	3.2	3.2	3.2	5	5
润滑油重新充注量 Lubrication Oil Recharge (L)		2.8	3	3	3	4.8	4.8
最大工作压力 Maxium Operating Pressure (MPa)	高压侧 High Pressure Side	3					
	低压侧 Low Pressure Side	2					
重量 Weight (kg)		66	66	66	66	92	92

注：蒸发5. 0˚C, 冷凝55. 0˚C, 过热11. 1K, 过冷8. 3K, 环温35. 0˚C
Note: Evaporating Temperature 5.0˚C, Condensing Temperating 55.0˚C, Superheating 11.1K, Subcooling 8.3K, Ambient Temperating 35.0˚C

技术参数
Specifications

技术参数 SPECIFICATIONS

WW — **R22**

带喷气增焓 *EVI*

型号 Model		WW24KM-TFD-GV1	WW34KM-TFD-GV1	WW48KM-TFD-GV1	WW61KM-TFD-GV1	WW72KM-TFD-GV1	WW79KM-TFD-GV1	WW94KM-TFD-GV1	WW108KM-TFD-GV1
电制 Motor Power		380-420V/3~/50Hz or 460V/3~/60Hz							
名义功率 Nominal Power (HP)		2	3	4	5	6	7	8	9
排量 Displacement (cc/Rev)		32.3	50.6	63.9	84.5	98.9	108	127	147.7
制冷剂 Refrigerant		R22							
名义制热量 Nominal Capacity (W)		8103	12694	16031	21199	24812	27095	31862	37055
名义输入功率 Nominal Power (W)		2035	3188	4026	5324	6231	6804	8001	9305
名义工况能效比 COP (W/W)		3.98	3.98	3.98	3.98	3.98	3.98	3.98	3.98
名义工况电流 Nominal Operating Current (A)		3.8	5.7	7.2	9.0	11.3	12.3	16.2	17.7
堵转电流 LRA (A)		38.8	38.8	38.8	83.6	83.6	83.6	117	117
最大运行电流 MOC (A)		4.6	6.8	8.6	12.7	14.5	17.1	20.1	21.7
曲轴箱加热器功率 Crankcase Heater (W)		70						90	
接管尺寸 Fitting ID Size (mm)	排气管 Dis.Tube	12.94-13.10						22.37-22.51	
	吸气管 Suc.Tube	22.37-22.51						34.97-35.10	
外形尺寸 Dimension (mm)	长(L)	244.8			257.01			283.04	
	宽(W)	230.5			230.5			240.5	
	高(H)	402.55			442.7			522.7	
底脚安装尺寸 Mounting Dimensions (mm)		190.5x190.5							
润滑油类型 Lubrication Oil		3GS							
润滑油初次充注量 Lubrication Oil Initial Charge (L)		1.4	1.4	1.4	1.8	1.8	1.8	3	3
润滑油重新充注量 Lubrication Oil Recharge (L)		1.2	1.2	1.2	1.6	1.6	1.6	2.8	2.8
最大工作压力 Maxium Operating Pressure (MPa)	高压侧 High Pressure Side	3							
	低压侧 Low Pressure Side	2							
重量 Weight (kg)		28	28	28	37	38	38	66	66

注：蒸发5. 0˚C, 冷凝55. 0˚C, 过热11. 1K, 过冷8. 3K, 环温35. 0˚C，EVI打开

Note: Evaporating Temperature 5.0˚C, Condensing Temperating 55.0˚C, Superheating 11.1K, Subcooling 8.3K, Ambient Temperating 35.0˚C，EVI open

R22 — **WW**

带喷气增焓 *EVI*

技术参数
Specifications

技术参数 SPECIFICATIONS

型号 Model		WW125KM-TFD-GV1	WW138KM-TFD-GV1	WW154KM-TFD-GV1	WW170KM-TFD-GV1	WW250KM-TWD-GV1	WW300KM-TWD-GV1
电制 Motor Power		380-420V/3~/50Hz or 460V/3~/60Hz					
名义功率 Nominal Power (HP)		10	12	13	15	20	25
排量 Displacement (cc/Rev)		166.1	190.8	209	248.9	325	400
制冷剂 Refrigerant		R22					
名义制热量 Nominal Capacity (W)		41671	47867	52433	62443	81535	100351
名义输入功率 Nominal Power (W)		10464	12020	13167	15681	20475	25200
名义工况能效比 COP (W/W)		3.98	3.98	3.98	3.98	3.98	3.98
名义工况电流 Nominal Operating Current (A)		17.8	21.7	23.0	27.4	35.8	46.7
堵转电流 LRA (A)		117	117	117	117	304	304
最大运行电流 MOC (A)		24.4	27.6	30.2	31.9	41.7	52
曲轴箱加热器功率 Crankcase Heater (W)		90					
接管尺寸 Fitting ID Size (mm)	排气管 Dis.Tube	22.37-22.51				28.81-28.95	
	吸气管 Suc.Tube	34.97-35.10				34.97-35.10	
外形尺寸 Dimension (mm)	长(L)	283.04	283.04			270.81	
	宽(W)	240.5	235.5			240.5	
	高(H)	522.7	522.7			663.7	
底脚安装尺寸 Mounting Dimensions (mm)		190.5x190.5					
润滑油类型 Lubrication Oil		3GS					
润滑油初次充注量 Lubrication Oil Initial Charge (L)		3	3.2	3.2	3.2	5	5
润滑油重新充注量 Lubrication Oil Recharge (L)		2.8	3	3	3	4.8	4.8
最大工作压力 Maxium Operating Pressure (MPa)	高压侧 High Pressure Side	3					
	低压侧 Low Pressure Side	2					
重量 Weight (kg)		66	66	66	66	92	92

注：蒸发5. 0˚C, 冷凝55. 0˚C, 过热11. 1K, 过冷8. 3K, 环温35. 0˚C，EVI打开

Note: Evaporating Temperature 5.0˚C, Condensing Temperating 55.0˚C, Superheating 11.1K, Subcooling 8.3K, Ambient Temperating 35.0˚C，EVI open

技术参数
Specifications

技术参数 SPECIFICATIONS

WW — **R134a**

不带喷气增焓 *W/O EVI*

型号 Model		WW24KF-TFD-GN1	WW34KF-TFD-GN1	WW48KF-TFD-GN1	WW61KF-TFD-GN1	WW72KF-TFD-GN1	WW79KF-TFD-GN1	WW94KF-TFD-GN1	WW108KF-TFD-GN1
电制 Motor Power		380-420V/3~/50Hz or 460V/3~/60Hz							
名义功率 Nominal Power (HP)		2	3	4	5	6	7	8	9
排量 Displacement (cc/Rev)		32.3	50.6	63.9	84.5	98.9	108	127	147.7
制冷剂 Refrigerant		R134a							
名义制热量 Nominal Capacity (W)		4427	6935	8758	11582	13555	14803	17407	20244
名义输入功率 Nominal Power (W)		1149	1800	2273	3006	3519	3842	4518	5255
名义工况能效比 COP (W/W)		3.85	3.85	3.85	3.85	3.85	3.85	3.85	3.85
名义工况电流 Nominal Operating Current (A)		2.4	3.9	4.9	6.5	7.4	8.4	9.2	10.1
堵转电流 LRA (A)		38.8	38.8	38.8	59.3	83.6	83.6	117	117
最大运行电流 MOC (A)		4.8	6.8	8.6	12.7	14.5	17.1	20.1	21.7
曲轴箱加热器功率 Crankcase Heater (W)		70						90	
接管尺寸 Fitting ID Size (mm)	排气管 Dis.Tube	12.94-13.10						22.37-22.51	
	吸气管 Suc.Tube	22.37-22.51						34.97-35.10	
外形尺寸 Dimension (mm)	长(L)	244.8			257.01			283.04	
	宽(W)	230.5			230.5			240.5	
	高(H)	402.55			442.7			522.7	
底脚安装尺寸 Mounting Dimensions（mm）		190.5x190.5							
润滑油类型 Lubrication Oil		POE							
润滑油初次充注量 Lubrication Oil Initial Charge (L)		1.4	1.4	1.4	1.4	1.8	1.8	3	3
润滑油重新充注量 Lubrication Oil Recharge (L)		1.2	1.2	1.2	1.2	1.6	1.6	2.8	2.8
最大工作压力 Maxium Operating Pressure (MPa)	高压侧 High Pressure Side	3							
	低压侧 Low Pressure Side	2							
重量 Weight (kg)		28	28	28	31	38	38	66	66

注：蒸发5. 0˚C, 冷凝55. 0˚C, 过热5. 0K, 过冷5. 0K, 环温35. 0˚C
Note: Evaporating Temperature 5.0˚C, Condensing Temperating 55.0˚C, Superheating 5.0K, Subcooling 5.0K, Ambient Temperating 35.0˚C

R134a — **WW**

不带喷气增焓 *W/O EVI*

技术参数
Specifications

技术参数 SPECIFICATIONS

型号 Model		WW125KF-TFD-GN1	WW138KF-TFD-GN1	WW154KF-TFD-GN1	WW170KF-TFD-GN1	WW250KF-TWD-GN1	WW300KF-TWD-GN1
电制 Motor Power		380-420V/3~/50Hz or 460V/3~/60Hz					
名义功率 Nominal Power (HP)		10	12	13	15	20	25
排量 Displacement (cc/Rev)		166.1	190.8	209	248.9	325	400
制冷剂 Refrigerant		R134a					
名义制热量 Nominal Capacity (W)		22766	26151	28646	34115	44545	54825
名义输入功率 Nominal Power (W)		5910	6788	7438	8855	11563	14231
名义工况能效比 COP (W/W)		3.85	3.85	3.85	3.85	3.85	3.85
名义工况电流 Nominal Operating Current (A)		11.7	12.6	13.4	16.0	20.9	27.1
堵转电流 LRA (A)		117	117	117	117	304	304
最大运行电流 MOC (A)		24.4	27.6	30.2	31.9	41.7	52
曲轴箱加热器功率 Crankcase Heater (W)		90					
接管尺寸 Fitting ID Size (mm)	排气管 Dis.Tube	22.37-22.51				28.81-28.95	
	吸气管 Suc.Tube	34.97-35.10				34.97-35.10	
外形尺寸 Dimension (mm)	长(L)	283.04	283.04			270.81	
	宽(W)	240.5	235.5			240.5	
	高(H)	522.7	522.7			663.7	
底脚安装尺寸 Mounting Dimensions（mm）		190.5x190.5					
润滑油类型 Lubrication Oil		POE					
润滑油初次充注量 Lubrication Oil Initial Charge (L)		3	3.2	3.2	3.2	5	5
润滑油重新充注量 Lubrication Oil Recharge (L)		2.8	3	3	3	4.8	4.8
最大工作压力 Maxium Operating Pressure (MPa)	高压侧 High Pressure Side	3					
	低压侧 Low Pressure Side	2					
重量 Weight (kg)		66	66	66	66	92	92

注：蒸发5. 0˚C, 冷凝55. 0˚C, 过热5. 0K, 过冷5. 0K, 环温35. 0˚C
Note: Evaporating Temperature 5.0˚C, Condensing Temperating 55.0˚C, Superheating 5.0K, Subcooling 5.0K, Ambient Temperating 35.0˚C

技术参数
Specifications

技术参数 SPECIFICATIONS

WW R134a

带喷气增焓 *EVI*

型号 Model		WW24KF-TFD-GV1	WW34KF-TFD-GV1	WW48KF-TFD-GV1	WW61KF-TFD-GV1	WW72KF-TFD-GV1	WW79KF-TFD-GV1	WW94KF-TFD-GV1	WW108KF-TFD-GV1
电制 Motor Power		380-420V/3~/50Hz or 460V/3~/60Hz							
名义功率 Nominal Power (HP)		2	3	4	5	6	7	8	9
排量 Displacement (cc/Rev)		32.3	50.6	63.9	84.5	98.9	108	127	147.7
制冷剂 Refrigerant		R134a							
名义制热量 Nominal Capacity (W)		5410	7907	10835	13852	16264	17349	21334	24925
名义输入功率 Nominal Power (W)		1254	1820	2263	3050	3544	3760	4696	5869
名义工况能效比 COP (W/W)		4.31	4.35	4.59	4.54	4.59	4.61	4.54	4.25
名义工况电流 Nominal Operating Current (A)		2.6	5.2	5.6	6.6	7.7	8.8	10.9	13.6
堵转电流 LRA (A)		38.8	38.8	38.8	59.3	83.6	83.6	117	117
最大运行电流 MOC (A)		5	10.5	11.3	13.3	15.5	17.7	21.9	27.4
曲轴箱加热器功率 Crankcase Heater (W)		70						90	
接管尺寸 Fitting ID Size (mm)	排气管 Dis.Tube	12.94-13.10						22.37-22.51	
	吸气管 Suc.Tube	22.37-22.51						34.97-35.10	
外形尺寸 Dimension (mm)	长(L)	244.8			257.01			283.04	
	宽(W)	230.5			230.5			240.5	
	高(H)	402.55			442.7			522.7	
底脚安装尺寸 Mounting Dimensions (mm)		190.5x190.5							
润滑油类型 Lubrication Oil		POE							
润滑油初次充注量 Lubrication Oil Initial Charge (L)		1.4	1.4	1.4	1.8	1.8	1.8	3	3
润滑油重新充注量 Lubrication Oil Recharge (L)		1.2	1.2	1.2	1.6	1.6	1.6	2.8	2.8
最大工作压力 Maxium Operating Pressure (MPa)	高压侧 High Pressure Side	3							
	低压侧 Low Pressure Side	2							
重量 Weight (kg)		28	28	28	37	38	38	66	66

注：蒸发5.0˚C, 冷凝55.0˚C, 过热5.0K, 过冷5.0K, 环温35.0˚C，EVI打开

Note: Evaporating Temperature 5.0˚C, Condensing Temperating 55.0˚C, Superheating 5.0K, Subcooling 5.0K, Ambient Temperating 35.0˚C，EVI open

R134a WW

带喷气增焓 *EVI*

技术参数
Specifications

技术参数 SPECIFICATIONS

型号 Model		WW125KF-TFD-GV1	WW138KF-TFD-GV1	WW154KF-TFD-GV1	WW170KF-TFD-GV1	WW250KF-TWD-GV1	WW300KF-TWD-GV1
电制 Motor Power		380-420V/3~/50Hz or 460V/3~/60Hz					
名义功率 Nominal Power (HP)		10	12	13	15	20	25
排量 Displacement (cc/Rev)		166.1	190.8	209	248.9	325	400
制冷剂 Refrigerant		R134a					
名义制热量 Nominal Capacity (W)		27554	31686	34645	41022	54951	67074
名义输入功率 Nominal Power (W)		6004	6887	7552	8850	12045	14813
名义工况能效比 COP (W/W)		4.59	4.60	4.59	4.64	4.56	4.53
名义工况电流 Nominal Operating Current (A)		13.9	15.9	16.5	19.3	27.9	33.1
堵转电流 LRA (A)		117	117	117	117	304	304
最大运行电流 MOC (A)		28.0	32.0	33.3	39.0	56.4	66.9
曲轴箱加热器功率 Crankcase Heater (W)		90					
接管尺寸 Fitting ID Size (mm)	排气管 Dis.Tube	22.37-22.51				28.81-28.95	
	吸气管 Suc.Tube	34.97-35.10				34.97-35.10	
外形尺寸 Dimension (mm)	长(L)	283.04	283.04			270.81	
	宽(W)	240.5	235.5			240.5	
	高(H)	522.7	522.7			663.7	
底脚安装尺寸 Mounting Dimensions (mm)		190.5x190.5					
润滑油类型 Lubrication Oil		POE					
润滑油初次充注量 Lubrication Oil Initial Charge (L)		3	3.2	3.2	3.2	5	5
润滑油重新充注量 Lubrication Oil Recharge (L)		2.8	3	3	3	4.8	4.8
最大工作压力 Maxium Operating Pressure (MPa)	高压侧 High Pressure Side	3					
	低压侧 Low Pressure Side	2					
重量 Weight (kg)		66	66	66	66	92	92

注：蒸发5.0˚C, 冷凝55.0˚C, 过热5.0K, 过冷5.0K, 环温35.0˚C，EVI打开

Note: Evaporating Temperature 5.0˚C, Condensing Temperating 55.0˚C, Superheating 5.0K, Subcooling 5.0K, Ambient Temperating 35.0˚C，EVI open

技术参数
Specifications

技术参数 SPECIFICATIONS

WW — **R410A**

不带喷气增焓 *W/O EVI*

型号Model		WW28KP-TFD-GN1	WW34KP-TFD-GN1	WW48KP-TFD-GN1	WW61KP-TFD-GN1	WW72KP-TFD-GN1	WW81KP-TFD-GN1	WW94KP-TFD-GN1	WW108KP-TFD-GN1
电制 Motor Power		380-420V/3~/50Hz or 460V/3~/60Hz							
名义功率 Nominal Power (HP)		2	3	4	5	6	7	8	9
排量 Displacement (cc/Rev)		26.7	32.3	48	63.9	67.1	77.2	89.8	98.9
制冷剂 Refrigerant		R410A							
名义制热量 Nominal Capacity (W)		8579	10378	15423	20532	21560	24805	28854	31778
名义输入功率 Nominal Power (W)		2254	2726	4051	5393	5663	6516	7579	8347
名义工况能效比 COP (W/W)		3.81	3.81	3.81	3.81	3.81	3.81	3.81	3.81
名义工况电流 Nominal Operating Current(A)		3.8	4.7	6.9	9.2	9.7	11.1	12.2	14.2
堵转电流(LRA)(A)		38.8	38.8	38.8	59.3	76	76	103.4	103.4
最大运行电流(MOC)(A)		6	7.3	10.8	14.3	15.1	17.3	21.8	22.2
曲轴箱加热器功率 Crankcase Heater (W)		70							
接管尺寸 Fitting ID Size (mm)	排气管 Dis.Tube	12.94-13.10							
	吸气管 Suc.Tube	22.37-22.51							
外形尺寸 Dimension (mm)	长(L)	244.8						257.01	
	宽(W)	230.5						230.5	
	高(H)	402.55						442.7	
底脚安装尺寸 Mounting Dimensions（mm）		190.5x190.5							
润滑油类型 Lubrication Oil		POE							
润滑油初次充注量 Lubrication Oil Initial Charge (L)		1.4	1.4	1.4	1.4	1.4	1.4	1.8	1.8
润滑油重新充注量 Lubrication Oil Recharge(L)		1.2	1.2	1.2	1.2	1.2	1.2	1.6	1.6
最大工作压力 Maxium Operating Pressure (MPa)	高压侧 High Pressure Side	4.3							
	低压侧 Low Pressure Side	2							
重量 Weight (kg)		28	28	28	30	31	31	38	43

注：蒸发5. 0˚C, 冷凝55. 0˚C, 过热11. 1K, 过冷8. 3K, 环温35. 0˚C
Note: Evaporating Temperature 5.0˚C, Condensing Temperating 55.0˚C, Superheating 11.1K, Subcooling 8.3K, Ambient Temperating 35.0˚C

R410A — **WW**

不带喷气增焓 *W/O EVI*

技术参数
Specifications

技术参数 SPECIFICATIONS

型号Model		WW125KP-TFD-GN1	WW144KP-TFD-GN1	WW154KP-TFD-GN1	WW170KP-TFD-GN1	WW235KP-TWD-GN1	WW292KP-TWD-GN1
电制 Motor Power		380-420V/3~/50Hz or 460V/3~/60Hz					
名义功率 Nominal Power (HP)		10	12	13	15	20	25
排量 Displacement (cc/Rev)		112	124.1	143.1	167.8	212.7	262.8
制冷剂 Refrigerant		R410A					
名义制热量 Nominal Capacity (W)		35987	39875	45980	53916	68343	84441
名义输入功率 Nominal Power (W)		9453	10474	12078	14163	17952	22181
名义工况能效比 COP (W/W)		3.81	3.81	3.81	3.81	3.81	3.81
名义工况电流 Nominal Operating Current(A)		16.1	17.9	20.6	24.2	30.6	37.8
堵转电流(LRA)(A)		117	117	117	117	304	304
最大运行电流(MOC)(A)		25.1	27.8	32.1	37.6	47.7	59
曲轴箱加热器功率 Crankcase Heater (W)		90					
接管尺寸 Fitting ID Size (mm)	排气管 Dis.Tube	22.37-22.51					28.81-28.95
	吸气管 Suc.Tube	34.97-35.10					34.97-35.10
外形尺寸 Dimension (mm)	长(L)	283.04				283.04	270.81
	宽(W)	240.5				235.5	240.5
	高(H)	522.7				522.7	663.7
底脚安装尺寸 Mounting Dimensions（mm）		190.5x190.5					
润滑油类型 Lubrication Oil		POE					
润滑油初次充注量 Lubrication Oil Initial Charge (L)		3	3	3	3	3.2	5
润滑油重新充注量 Lubrication Oil Recharge(L)		2.8	2.8	2.8	2.8	3	4.8
最大工作压力 Maxium Operating Pressure (MPa)	高压侧 High Pressure Side	4.3					
	低压侧 Low Pressure Side	2					
重量 Weight (kg)		66	66	66	66	66	92

注：蒸发5. 0˚C, 冷凝55. 0˚C, 过热11. 1K, 过冷8. 3K, 环温35. 0˚C，EVI打开
Note: Evaporating Temperature 5.0˚C, Condensing Temperating 55.0˚C, Superheating 11.1K, Subcooling 8.3K, Ambient Temperating 35.0˚C，EVI open

技术参数
Specifications

技术参数 SPECIFICATIONS

WW — **R410A**

带喷气增焓 *EVI*

型号Model		WW50HP-TFD-GV1	WW70HP-TFD-GV1	WW96HP-TFD-GV1	WW126HP-TFD-GV1	WW130HP-TFD-GV1	WW150HP-TFD-GV1	WW170HP-TFD-GV1	WW200HP-TFD-GV1
电制 Motor Power		380-420V/3~/50Hz or 460V/3~/60Hz							
名义功率 Nominal Power (HP)		2	3	4	5	6	7	8	9
排量 Displacement (cc/Rev)		26.7	32.3	48	63.9	67.1	77.2	89.8	98.9
制冷剂 Refrigerant		R410A							
名义制热量 Nominal Capacity (W)		9712	11748	17459	23242	24406	28080	32661	35973
名义输入功率 Nominal Power (W)		2655	3212	4773	6354	6672	7677	8930	9835
名义工况能效比 COP (W/W)		3.66	3.66	3.66	3.66	3.66	3.66	3.66	3.66
名义工况电流 Nominal Operating Current(A)		4.7	5.7	8.4	11.2	11.7	13.5	16.5	17.3
堵转电流(LRA)(A)		38.8	38.8	38.8	59.3	76	76	103.4	103.4
最大运行电流(MOC)(A)		6	7.3	10.8	14.3	15.1	17.3	21.3	22.2
曲轴箱加热器功率 Crankcase Heater (W)		70							
接管尺寸 Fitting ID Size (mm)	排气管 Dis.Tube	12.94 -13.10							
	吸气管 Suc.Tube	22.37 -22.51							
外形尺寸 Dimension (mm)	长(L)	244.8						257.01	
	宽(W)	230.5						230.5	
	高(H)	402.55						442.7	
底脚安装尺寸 Mounting Dimensions (mm)		190.5x190.5							
润滑油类型 Lubrication Oil		POE							
润滑油初次充注量 Lubrication Oil Initial Charge (L)		1.4	1.4	1.4	1.4	1.4	1.4	1.8	1.8
润滑油重新充注量 Lubrication Oil Recharge(L)		1.2	1.2	1.2	1.2	1.2	1.2	1.6	1.6
最大工作压力 Maxium Operating Pressure (MPa)	高压侧 High Pressure Side	4.3							
	低压侧 Low Pressure Side	2							
重量 Weight (kg)		28	28	28	30	31	31	38	43

注：蒸发5. 0˚C, 冷凝55. 0˚C, 过热11. 1K, 过冷8. 3K, 环温35. 0˚C，EVI打开

Note: Evaporating Temperature 5.0˚C, Condensing Temperating 55.0˚C, Superheating 11.1K, Subcooling 8.3K, Ambient Temperating 35.0˚C，EVI open

R410A — **WW**

带喷气增焓 *EVI*

技术参数
Specifications

技术参数 SPECIFICATIONS

型号Model		WW220HP-TFD-GV1	WW258HP-TFD-GV1	WW286HP-TFD-GV1	WW336HP-TFD-GV1	WW430HP-TWD-GV1	WW520HP-TWD-GV1
电制 Motor Power		380-420V/3~/50Hz or 460V/3~/60Hz					
名义功率 Nominal Power (HP)		10	12	13	15	20	25
排量 Displacement (cc/Rev)		112	124.1	143.1	167.8	212.7	262.8
制冷剂 Refrigerant		R410A					
名义制热量 Nominal Capacity (W)		40738	45139	52050	61034	77366	95589
名义输入功率 Nominal Power (W)		11137	12341	14230	16686	21151	26133
名义工况能效比 COP (W/W)		3.66	3.66	3.66	3.66	3.66	3.66
名义工况电流 Nominal Operating Current(A)		19.6	21.7	25	29.3	37.2	45.9
堵转电流(LRA)(A)		117	117	117	117	304	304
最大运行电流(MOC)(A)		25.1	28.4	32.1	35.8	45.3	56
曲轴箱加热器功率 Crankcase Heater (W)		90	90	90	90	90	90
接管尺寸 Fitting ID Size (mm)	排气管 Dis.Tube	22.37 -22.51					28.81 -28.95
	吸气管 Suc.Tube	34.97 -35.10					34.97 -35.10
外形尺寸 Dimension (mm)	长(L)	283.04				283.04	270.81
	宽(W)	240.5				235.5	240.5
	高(H)	522.7				522.7	663.7
底脚安装尺寸 Mounting Dimensions (mm)		190.5x190.5					
润滑油类型 Lubrication Oil		POE					
润滑油初次充注量 Lubrication Oil Initial Charge (L)		3	3	3	3	3.2	5
润滑油重新充注量 Lubrication Oil Recharge(L)		2.8	2.8	2.8	2.8	3	4.8
最大工作压力 Maxium Operating Pressure (MPa)	高压侧 High Pressure Side	4.3					
	低压侧 Low Pressure Side	2					
重量 Weight (kg)		66	66	66	66	66	92

注：蒸发5. 0˚C, 冷凝55. 0˚C, 过热11. 1K, 过冷8. 3K, 环温35. 0˚C，EVI打开

Note: Evaporating Temperature 5.0˚C, Condensing Temperating 55.0˚C, Superheating 11.1K, Subcooling 8.3K, Ambient Temperating 35.0˚C，EVI open

制热量
Heating Capacity

制热量 HEATING CAPACITY

WW R22

不带喷气增焓 *W/O EVI*

型号Model	项目Item (KW)	Tc\Te	-20℃	-15℃	-10℃	-5℃	0℃	5℃	10℃	15℃
WW24KM-TFD-GN1	Q	70℃						6.77	7.59	8.58
	P							2.40	2.46	2.50
	Q	65℃					6.10	6.84	7.75	8.82
	P						2.10	2.17	2.22	2.26
	Q	60℃				5.45	6.11	6.94	7.93	9.07
	P					1.84	1.91	1.96	2.01	2.04
	Q	55℃			4.83	5.42	6.17	7.08	8.13	9.32
	P				1.60	1.67	1.73	1.78	1.82	1.86
	Q	50℃		4.25	4.77	5.44	6.26	7.23	8.33	9.55
	P			1.39	1.46	1.52	1.57	1.62	1.66	1.69
	Q	45℃	3.70	4.15	4.75	5.50	6.38	7.39	8.52	9.76
	P		1.22	1.28	1.34	1.39	1.43	1.47	1.51	1.54
	Q	40℃	3.57	4.10	4.77	5.58	6.50	7.54	8.69	9.94
	P		1.13	1.18	1.22	1.26	1.30	1.34	1.38	1.42
	Q	35℃	3.51	4.10	4.83	5.67	6.62	7.68	8.83	
	P		1.04	1.08	1.11	1.15	1.18	1.22	1.26	
	Q	30℃	3.49	4.14	4.90	5.77	6.73	7.79		
	P		0.96	0.98	1.01	1.04	1.07	1.11		
	Q	25℃	3.51	4.19	4.98	5.86	6.82			
	P		0.87	0.89	0.91	0.94	0.97			
	Q	20℃	3.55	4.26	5.05	5.93	6.87			
	P		0.79	0.79	0.81	0.83	0.87			
WW34KM-TFD-GN1	Q	70℃						10.60	11.88	13.44
	P							3.76	3.85	3.92
	Q	65℃					9.55	10.71	12.13	13.81
	P						3.30	3.40	3.48	3.54
	Q	60℃				8.54	9.58	10.88	12.42	14.21
	P					2.88	2.99	3.08	3.15	3.20
	Q	55℃			7.57	8.50	9.67	11.09	12.73	14.59
	P				2.50	2.62	2.71	2.79	2.86	2.91
	Q	50℃		6.66	7.47	8.52	9.81	11.33	13.04	14.96
	P			2.18	2.29	2.38	2.46	2.54	2.60	2.65
	Q	45℃	5.79	6.50	7.44	8.61	9.99	11.57	13.34	15.29
	P		1.90	2.00	2.09	2.17	2.24	2.31	2.36	2.42
	Q	40℃	5.60	6.43	7.48	8.73	10.18	11.81	13.61	15.57
	P		1.76	1.84	1.91	1.98	2.04	2.10	2.16	2.22
	Q	35℃	5.49	6.43	7.56	8.88	10.37	12.03	13.83	
	P		1.63	1.69	1.74	1.80	1.85	1.91	1.97	
	Q	30℃	5.46	6.48	7.67	9.03	10.55	12.20		
	P		1.50	1.54	1.58	1.63	1.68	1.74		
	Q	25℃	5.49	6.57	7.80	9.17	10.68			
	P		1.37	1.39	1.43	1.47	1.52			
	Q	20℃	5.56	6.67	7.91	9.28	10.77			
	P		1.23	1.24	1.27	1.30	1.36			

注：冷凝器出口过冷度8. 3K, 过热度11. 1K

Note：Condenser Outlet Subcooling8.3K,Subheating 11.1K

R22 **WW**

不带喷气增焓 *W/O EVI*

制热量
Heating Capacity

制热量 HEATING CAPACITY

型号Model	项目Item (KW)	Tc\Te	-20℃	-15℃	-10℃	-5℃	0℃	5℃	10℃	15℃
WW48KM-TFD-GN1	Q	70℃						13.39	15.01	16.97
	P							4.75	4.86	4.95
	Q	65℃					12.06	13.52	15.32	17.45
	P						4.16	4.29	4.39	4.47
	Q	60℃				10.79	12.10	13.74	15.69	17.94
	P					3.63	3.77	3.89	3.98	4.04
	Q	55℃			9.56	10.73	12.21	14.00	16.08	18.43
	P				3.16	3.30	3.42	3.52	3.61	3.67
	Q	50℃		8.41	9.43	10.77	12.39	14.30	16.47	18.89
	P			2.75	2.89	3.01	3.11	3.20	3.28	3.34
	Q	45℃	7.32	8.21	9.40	10.87	12.62	14.61	16.85	19.31
	P		2.40	2.53	2.64	2.74	2.83	2.91	2.99	3.06
	Q	40℃	7.07	8.12	9.45	11.03	12.86	14.92	17.19	19.66
	P		2.23	2.33	2.42	2.50	2.58	2.65	2.73	2.80
	Q	35℃	6.94	8.12	9.55	11.22	13.10	15.19	17.47	
	P		2.06	2.13	2.20	2.27	2.34	2.42	2.49	
	Q	30℃	6.90	8.18	9.69	11.41	13.32	15.41		
	P		1.90	1.95	2.00	2.06	2.12	2.20		
	Q	25℃	6.94	8.29	9.85	11.58	13.49			
	P		1.73	1.76	1.80	1.85	1.91			
	Q	20℃	7.03	8.42	9.99	11.72	13.60			
	P		1.56	1.57	1.60	1.65	1.71			
WW61KM-TFD-GN1	Q	70℃						17.71	19.84	22.44
	P							6.28	6.43	6.54
	Q	65℃					15.95	17.88	20.26	23.07
	P						5.50	5.68	5.81	5.91
	Q	60℃				14.26	16.00	18.16	20.74	23.72
	P					4.80	4.99	5.14	5.26	5.35
	Q	55℃			12.65	14.19	16.15	18.52	21.26	24.37
	P				4.18	4.37	4.53	4.66	4.77	4.85
	Q	50℃		11.12	12.47	14.24	16.39	18.91	21.78	24.99
	P			3.64	3.82	3.98	4.12	4.23	4.33	4.42
	Q	45℃	9.68	10.85	12.43	14.38	16.68	19.33	22.28	25.54
	P		3.18	3.35	3.50	3.63	3.74	3.85	3.95	4.04
	Q	40℃	9.35	10.74	12.49	14.59	17.00	19.73	22.73	26.00
	P		2.95	3.08	3.19	3.30	3.41	3.51	3.61	3.71
	Q	35℃	9.17	10.74	12.63	14.83	17.32	20.09	23.10	
	P		2.72	2.82	2.91	3.00	3.10	3.19	3.30	
	Q	30℃	9.12	10.82	12.81	15.08	17.61	20.38		
	P		2.51	2.57	2.64	2.72	2.81	2.91		
	Q	25℃	9.17	10.97	13.02	15.32	17.84			
	P		2.29	2.33	2.38	2.45	2.53			
	Q	20℃	9.29	11.14	13.21	15.50	17.98			
	P		2.06	2.08	2.12	2.18	2.26			

注：冷凝器出口过冷度8. 3K, 过热度11. 1K

Note：Condenser Outlet Subcooling8.3K,Subheating 11.1K

制热量
Heating Capacity

制热量 HEATING CAPACITY

WW R22

不带喷气增焓 *W/O EVI*

型号Model	项目Item (KW)	Tc\Te	-20℃	-15℃	-10℃	-5℃	0℃	5℃	10℃	15℃
WW72KM-TFD-GN1	Q	70℃						20.73	23.23	26.26
	P							7.35	7.53	7.65
	Q	65℃					18.67	20.93	23.72	27.00
	P						6.44	6.64	6.80	6.91
	Q	60℃				16.70	18.72	21.26	24.28	27.76
	P					5.62	5.84	6.01	6.15	6.26
	Q	55℃			14.80	16.61	18.90	21.67	24.89	28.52
	P				4.89	5.11	5.30	5.45	5.58	5.68
	Q	50℃		13.01	14.60	16.66	19.18	22.14	25.50	29.24
	P			4.26	4.47	4.66	4.82	4.95	5.07	5.17
	Q	45℃	11.32	12.70	14.55	16.83	19.53	22.62	26.08	29.89
	P		3.72	3.92	4.09	4.25	4.38	4.51	4.62	4.73
	Q	40℃	10.94	12.57	14.62	17.07	19.90	23.09	26.61	30.43
	P		3.45	3.60	3.74	3.87	3.99	4.10	4.22	4.34
	Q	35℃	10.74	12.57	14.78	17.36	20.28	23.51	27.04	
	P		3.19	3.30	3.41	3.52	3.63	3.74	3.86	
	Q	30℃	10.68	12.67	15.00	17.66	20.61	23.85		
	P		2.93	3.01	3.10	3.19	3.29	3.40		
	Q	25℃	10.74	12.83	15.24	17.93	20.88			
	P		2.68	2.72	2.79	2.87	2.96			
	Q	20℃	10.88	13.04	15.47	18.14	21.04			
	P		2.41	2.43	2.48	2.55	2.65			
WW79KM-TFD-GN1	Q	70℃						22.63	25.36	28.68
	P							8.03	8.22	8.36
	Q	65℃					20.39	22.86	25.90	29.48
	P						7.03	7.25	7.43	7.55
	Q	60℃				18.23	20.44	23.21	26.51	30.32
	P					6.14	6.38	6.57	6.72	6.83
	Q	55℃			16.17	18.13	20.64	23.66	27.17	31.15
	P				5.34	5.58	5.79	5.96	6.09	6.20
	Q	50℃		14.21	15.94	18.20	20.95	24.17	27.84	31.93
	P			4.65	4.88	5.09	5.26	5.41	5.54	5.65
	Q	45℃	12.37	13.87	15.88	18.38	21.32	24.70	28.48	32.64
	P		4.06	4.28	4.47	4.64	4.79	4.92	5.05	5.16
	Q	40℃	11.95	13.72	15.96	18.64	21.73	25.21	29.05	33.23
	P		3.76	3.93	4.08	4.22	4.36	4.48	4.61	4.74
	Q	35℃	11.72	13.72	16.14	18.96	22.14	25.67	29.52	
	P		3.48	3.60	3.72	3.84	3.96	4.08	4.22	
	Q	30℃	11.66	13.83	16.38	19.28	22.51	26.04		
	P		3.20	3.29	3.38	3.48	3.59	3.71		
	Q	25℃	11.73	14.01	16.64	19.58	22.80			
	P		2.92	2.98	3.04	3.13	3.24			
	Q	20℃	11.88	14.24	16.89	19.81	22.98			
	P		2.63	2.66	2.71	2.78	2.89			

注：冷凝器出口过冷度8. 3K, 过热度11. 1K

Note：Condenser Outlet Subcooling8.3K,Subheating 11.1K

R22 **WW**

不带喷气增焓 *W/O EVI*

制热量
Heating Capacity

制热量 HEATING CAPACITY

型号Model	项目Item (KW)	Tc\Te	-20℃	-15℃	-10℃	-5℃	0℃	5℃	10℃	15℃
WW94KM-TFD-GN1	Q	70℃						26.61	29.82	33.73
	P							9.44	9.67	9.83
	Q	65℃					23.98	26.88	30.45	34.67
	P						8.27	8.53	8.73	8.88
	Q	60℃				21.44	24.04	27.30	31.18	35.65
	P					7.22	7.50	7.72	7.90	8.04
	Q	55℃			19.01	21.32	24.27	27.83	31.96	36.63
	P				6.28	6.57	6.81	7.00	7.17	7.30
	Q	50℃		16.71	18.74	21.40	24.63	28.42	32.74	37.55
	P			5.47	5.74	5.98	6.19	6.36	6.51	6.64
	Q	45℃	14.54	16.31	18.68	21.61	25.08	29.05	33.49	38.38
	P		4.78	5.03	5.25	5.45	5.63	5.79	5.93	6.07
	Q	40℃	14.05	16.14	18.77	21.92	25.56	29.65	34.17	39.08
	P		4.43	4.62	4.80	4.97	5.12	5.27	5.42	5.57
	Q	35℃	13.79	16.14	18.98	22.29	26.04	30.19	34.72	
	P		4.09	4.24	4.38	4.52	4.66	4.80	4.96	
	Q	30℃	13.71	16.26	19.26	22.67	26.47	30.62		
	P		3.77	3.87	3.97	4.09	4.22	4.37		
	Q	25℃	13.79	16.48	19.57	23.02	26.81			
	P		3.44	3.50	3.58	3.68	3.81			
	Q	20℃	13.97	16.74	19.86	23.30	27.02			
	P		3.09	3.12	3.18	3.27	3.40			
WW108KM-TFD-GN1	Q	70℃						30.95	34.69	39.22
	P							10.97	11.24	11.43
	Q	65℃					27.89	31.26	35.42	40.32
	P						9.62	9.92	10.16	10.32
	Q	60℃				24.93	27.96	31.75	36.26	41.47
	P					8.40	8.72	8.98	9.19	9.35
	Q	55℃			22.11	24.80	28.23	32.36	37.16	42.60
	P				7.31	7.64	7.92	8.15	8.33	8.48
	Q	50℃		19.43	21.80	24.88	28.65	33.06	38.08	43.67
	P			6.36	6.68	6.96	7.19	7.40	7.58	7.73
	Q	45℃	16.91	18.97	21.72	25.13	29.16	33.78	38.95	44.64
	P		5.56	5.85	6.11	6.34	6.55	6.73	6.90	7.06
	Q	40℃	16.34	18.77	21.83	25.50	29.72	34.48	39.73	45.45
	P		5.15	5.38	5.58	5.78	5.96	6.13	6.30	6.48
	Q	35℃	16.03	18.77	22.07	25.92	30.28	35.11	40.38	
	P		4.76	4.93	5.09	5.25	5.41	5.58	5.76	
	Q	30℃	15.95	18.92	22.40	26.37	30.78	35.62		
	P		4.38	4.50	4.62	4.76	4.91	5.08		
	Q	25℃	16.04	19.17	22.76	26.77	31.18			
	P		4.00	4.07	4.16	4.28	4.43			
	Q	20℃	16.24	19.47	23.10	27.10	31.43			
	P		3.60	3.63	3.70	3.81	3.96			

注：冷凝器出口过冷度8. 3K, 过热度11. 1K

Note：Condenser Outlet Subcooling8.3K,Subheating 11.1K

制热量
Heating Capacity

制热量 HEATING CAPACITY

WW — **R22**

不带喷气增焓 *W/O EVI*

型号Model	项目Item (KW)	Tc\Te	-20℃	-15℃	-10℃	-5℃	0℃	5℃	10℃	15℃
WW125KM-TFD-GN1	Q	70℃						34.81	39.01	44.11
	P							12.34	12.64	12.86
	Q	65℃					31.36	35.16	39.83	45.35
	P						10.82	11.16	11.42	11.61
	Q	60℃				28.04	31.44	35.70	40.78	46.63
	P					9.44	9.81	10.10	10.34	10.51
	Q	55℃			24.86	27.89	31.75	36.39	41.79	47.91
	P				8.22	8.59	8.90	9.16	9.37	9.54
	Q	50℃		21.85	24.51	27.98	32.22	37.18	42.82	49.11
	P			7.15	7.51	7.82	8.09	8.32	8.52	8.69
	Q	45℃	19.02	21.34	24.43	28.26	32.80	37.99	43.80	50.20
	P		6.25	6.58	6.87	7.13	7.36	7.57	7.76	7.94
	Q	40℃	18.37	21.11	24.55	28.67	33.43	38.78	44.68	51.11
	P		5.79	6.05	6.28	6.50	6.70	6.89	7.09	7.28
	Q	35℃	18.03	21.10	24.82	29.15	34.05	39.48	45.41	
	P		5.35	5.54	5.73	5.91	6.09	6.28	6.48	
	Q	30℃	17.94	21.27	25.19	29.65	34.62	40.05		
	P		4.93	5.06	5.20	5.35	5.52	5.71		
	Q	25℃	18.03	21.55	25.59	30.11	35.07			
	P		4.49	4.58	4.68	4.81	4.98			
	Q	20℃	18.26	21.89	25.98	30.47	35.34			
	P		4.05	4.08	4.16	4.28	4.45			
WW138KM-TFD-GN1	Q	70℃						39.99	44.81	50.67
	P							14.18	14.52	14.77
	Q	65℃					36.02	40.38	45.75	52.09
	P						12.43	12.82	13.12	13.34
	Q	60℃				32.21	36.12	41.01	46.84	53.56
	P					10.85	11.26	11.60	11.87	12.07
	Q	55℃			28.56	32.04	36.47	41.81	48.01	55.03
	P				9.44	9.87	10.23	10.52	10.77	10.96
	Q	50℃		25.10	28.16	32.14	37.01	42.70	49.19	56.42
	P			8.22	8.63	8.99	9.29	9.56	9.79	9.98
	Q	45℃	21.85	24.51	28.06	32.47	37.67	43.64	50.32	57.67
	P		7.18	7.56	7.89	8.19	8.46	8.70	8.92	9.12
	Q	40℃	21.11	24.25	28.20	32.94	38.40	44.54	51.33	58.71
	P		6.65	6.95	7.21	7.46	7.69	7.92	8.14	8.37
	Q	35℃	20.71	24.24	28.52	33.49	39.12	45.35	52.16	
	P		6.15	6.37	6.58	6.78	6.99	7.21	7.45	
	Q	30℃	20.60	24.44	28.94	34.06	39.77	46.01		
	P		5.66	5.81	5.97	6.15	6.34	6.56		
	Q	25℃	20.72	24.76	29.40	34.59	40.28			
	P		5.16	5.26	5.38	5.53	5.72			
	Q	20℃	20.98	25.15	29.84	35.00	40.60			
	P		4.65	4.69	4.78	4.92	5.11			

注：冷凝器出口过冷度8. 3K, 过热度11. 1K

Note：Condenser Outlet Subcooling8.3K,Subheating 11.1K

R22 — **WW**

不带喷气增焓 *W/O EVI*

制热量
Heating Capacity

制热量 HEATING CAPACITY

型号Model	项目Item (KW)	Tc\Te	-20℃	-15℃	-10℃	-5℃	0℃	5℃	10℃	15℃
WW154KM-TFD-GN1	Q	70℃						43.80	49.08	55.50
	P							15.53	15.91	16.18
	Q	65℃					39.46	44.23	50.12	57.06
	P						13.61	14.04	14.37	14.61
	Q	60℃				35.28	39.56	44.92	51.31	58.67
	P					11.88	12.34	12.71	13.00	13.23
	Q	55℃			31.28	35.09	39.95	45.79	52.59	60.28
	P				10.34	10.81	11.20	11.53	11.79	12.01
	Q	50℃		27.49	30.85	35.21	40.54	46.78	53.88	61.80
	P			9.00	9.45	9.84	10.18	10.47	10.72	10.93
	Q	45℃	23.93	26.85	30.74	35.56	41.27	47.80	55.12	63.17
	P		7.86	8.28	8.64	8.97	9.26	9.53	9.77	9.99
	Q	40℃	23.12	26.56	30.89	36.08	42.06	48.79	56.22	64.31
	P		7.29	7.61	7.90	8.17	8.43	8.67	8.92	9.17
	Q	35℃	22.69	26.55	31.24	36.68	42.85	49.68	57.13	
	P		6.74	6.98	7.21	7.43	7.66	7.90	8.16	
	Q	30℃	22.57	26.77	31.70	37.31	43.56	50.40		
	P		6.20	6.37	6.54	6.73	6.95	7.19		
	Q	25℃	22.69	27.12	32.20	37.89	44.13			
	P		5.66	5.76	5.89	6.06	6.26			
	Q	20℃	22.98	27.55	32.68	38.34	44.47			
	P		5.09	5.14	5.24	5.39	5.60			
WW170KM-TFD-GN1	Q	70℃						52.16	58.45	66.10
	P							18.49	18.95	19.26
	Q	65℃					46.99	52.68	59.68	67.95
	P						16.21	16.72	17.11	17.40
	Q	60℃				42.02	47.12	53.50	61.11	69.88
	P					14.15	14.69	15.14	15.49	15.75
	Q	55℃			37.26	41.79	47.57	54.54	62.63	71.79
	P				12.32	12.87	13.34	13.73	14.04	14.30
	Q	50℃		32.74	36.74	41.93	48.28	55.71	64.17	73.60
	P			10.72	11.26	11.72	12.12	12.47	12.77	13.02
	Q	45℃	28.50	31.97	36.61	42.35	49.14	56.93	65.64	75.23
	P		9.36	9.86	10.30	10.68	11.03	11.34	11.63	11.90
	Q	40℃	27.53	31.63	36.79	42.96	50.09	58.11	66.96	76.59
	P		8.68	9.06	9.41	9.73	10.04	10.33	10.62	10.92
	Q	35℃	27.02	31.62	37.20	43.69	51.03	59.17	68.04	
	P		8.02	8.31	8.58	8.85	9.12	9.41	9.71	
	Q	30℃	26.88	31.88	37.75	44.43	51.88	60.02		
	P		7.38	7.58	7.79	8.02	8.27	8.56		
	Q	25℃	27.02	32.30	38.35	45.12	52.55			
	P		6.74	6.86	7.01	7.21	7.46			
	Q	20℃	27.37	32.81	38.92	45.66	52.96			
	P		6.06	6.12	6.24	6.42	6.67			

注：冷凝器出口过冷度8. 3K, 过热度11. 1K

Note：Condenser Outlet Subcooling8.3K,Subheating 11.1K

制热量 Heating Capacity

WW R22

不带喷气增焓 W/O EVI

制热量 HEATING CAPACITY

型号Model	项目Item (KW)	Tc\Te	-20℃	-15℃	-10℃	-5℃	0℃	5℃	10℃	15℃
WW250KM-TWD-GN1	Q	70℃						68.11	76.32	86.31
	P							24.15	24.74	25.15
	Q	65℃					61.36	68.79	77.93	88.73
	P						21.16	21.83	22.35	22.72
	Q	60℃				54.86	61.52	69.86	79.79	91.24
	P					18.47	19.19	19.77	20.22	20.57
	Q	55℃			48.65	54.57	62.12	71.21	81.78	93.73
	P				16.08	16.81	17.42	17.92	18.34	18.67
	Q	50℃		42.75	47.97	54.75	63.04	72.74	83.79	96.10
	P			14.00	14.70	15.31	15.83	16.28	16.67	17.00
	Q	45℃	37.21	41.75	47.80	55.30	64.17	74.33	85.71	98.23
	P		12.23	12.87	13.44	13.95	14.40	14.81	15.19	15.54
	Q	40℃	35.95	41.30	48.04	56.10	65.40	75.87	87.43	100.00
	P		11.33	11.83	12.29	12.71	13.11	13.49	13.87	14.25
	Q	35℃	35.28	41.29	48.57	57.04	66.63	77.26	88.84	
	P		10.48	10.85	11.20	11.56	11.91	12.29	12.68	
	Q	30℃	35.10	41.62	49.29	58.02	67.74	78.37		
	P		9.64	9.90	10.17	10.47	10.80	11.18		
	Q	25℃	35.29	42.17	50.08	58.91	68.62			
	P		8.79	8.95	9.16	9.42	9.74			
	Q	20℃	35.74	42.84	50.82	59.62	69.15			
	P		7.91	7.99	8.14	8.38	8.71			
WW300KM-TWD-GN1	Q	70℃						83.83	93.93	106.23
	P							29.72	30.45	30.96
	Q	65℃					75.52	84.66	95.92	109.20
	P						26.05	26.87	27.50	27.96
	Q	60℃				67.52	75.72	85.98	98.20	112.30
	P					22.74	23.61	24.33	24.89	25.31
	Q	55℃			59.87	67.16	76.45	87.65	100.65	115.37
	P				19.79	20.68	21.44	22.06	22.57	22.98
	Q	50℃		52.62	59.04	67.39	77.58	89.53	103.12	118.28
	P			17.23	18.09	18.84	19.49	20.04	20.52	20.93
	Q	45℃	45.80	51.38	58.83	68.06	78.98	91.48	105.49	120.89
	P		15.05	15.84	16.55	17.17	17.73	18.23	18.69	19.12
	Q	40℃	44.25	50.83	59.13	69.05	80.50	93.38	107.61	123.08
	P		13.94	14.56	15.12	15.64	16.13	16.60	17.07	17.54
	Q	35℃	43.42	50.82	59.78	70.21	82.01	95.08	109.35	
	P		12.89	13.35	13.79	14.22	14.66	15.12	15.61	
	Q	30℃	43.20	51.23	60.66	71.41	83.37	96.45		
	P		11.86	12.18	12.52	12.88	13.29	13.76		
	Q	25℃	43.43	51.91	61.63	72.51	84.45			
	P		10.82	11.02	11.27	11.59	11.99			
	Q	20℃	43.98	52.72	62.55	73.38	85.11			
	P		9.74	9.84	10.02	10.31	10.71			

注：冷凝器出口过冷度8. 3K, 过热度11. 1K

Note：Condenser Outlet Subcooling8.3K,Subheating 11.1K

R22 WW

带喷气增焓 EVI

制热量 Heating Capacity

制热量 HEATING CAPACITY

型号Model	项目Item (KW)	Tc\Te	-30℃	-25℃	-20℃	-15℃	-10℃	-5℃	0℃	5℃	10℃	15℃
WW24KM-TFD-GV1	Q	70℃								8.23	9.12	10.14
	P									2.81	2.87	2.94
	Q	65℃		4.28	4.79	5.33	5.92	6.58	7.32	8.15	9.09	10.14
	P			2.33	2.32	2.33	2.36	2.40	2.45	2.51	2.57	2.63
	Q	60℃		4.00	4.55	5.14	5.78	6.47	7.25	8.11	9.08	10.17
	P			2.06	2.05	2.07	2.10	2.15	2.20	2.25	2.31	2.36
	Q	55℃	3.21	3.79	4.38	5.01	5.68	6.41	7.21	8.10	9.09	10.20
	P		1.84	1.82	1.83	1.85	1.88	1.93	1.98	2.03	2.09	2.14
	Q	50℃	3.03	3.64	4.26	4.92	5.61	6.37	7.19	8.10	9.11	10.23
	P		1.63	1.62	1.63	1.66	1.70	1.74	1.80	1.85	1.90	1.95
	Q	45℃	2.90	3.53	4.18	4.86	5.57	6.34	7.18	8.10	9.11	10.23
	P		1.45	1.45	1.46	1.49	1.54	1.58	1.64	1.69	1.74	1.78
	Q	40℃	2.81	3.47	4.13	4.82	5.54	6.32	7.16	8.08	9.09	10.21
	P		1.29	1.29	1.32	1.35	1.40	1.45	1.50	1.55	1.60	1.63
	Q	35℃	2.75	3.41	4.08	4.78	5.50	6.28	7.11	8.03	9.03	
	P		1.14	1.15	1.18	1.22	1.27	1.32	1.38	1.43	1.47	
	Q	30℃	2.71	3.37	4.04	4.72	5.44	6.21	7.03	7.93		
	P		1.00	1.03	1.06	1.10	1.16	1.21	1.26	1.31		
	Q	25℃	2.66	3.31	3.97	4.65	5.35	6.10	6.90			
	P		0.87	0.90	0.94	0.99	1.04	1.10	1.15			
	Q	20℃	2.60	3.24	3.88	4.53	5.21	5.93	6.70			
	P		0.73	0.77	0.82	0.87	0.93	0.99	1.04			
WW34KM-TFD-GV1	Q	70℃								12.89	14.29	15.89
	P									4.40	4.50	4.60
	Q	65℃		6.71	7.50	8.35	9.28	10.31	11.47	12.77	14.24	15.89
	P			3.64	3.63	3.65	3.69	3.76	3.84	3.93	4.03	4.12
	Q	60℃		6.26	7.13	8.05	9.05	10.14	11.36	12.71	14.23	15.93
	P			3.22	3.22	3.24	3.29	3.36	3.44	3.53	3.62	3.70
	Q	55℃	5.03	5.93	6.86	7.84	8.89	10.04	11.30	12.69	14.25	15.98
	P		2.88	2.86	2.86	2.89	2.95	3.02	3.10	3.19	3.27	3.35
	Q	50℃	4.74	5.70	6.68	7.70	8.79	9.98	11.27	12.69	14.27	16.02
	P		2.56	2.54	2.56	2.60	2.66	2.73	2.81	2.90	2.98	3.05
	Q	45℃	4.54	5.54	6.55	7.61	8.73	9.94	11.25	12.69	14.28	16.03
	P		2.27	2.27	2.29	2.34	2.41	2.48	2.56	2.65	2.72	2.79
	Q	40℃	4.41	5.43	6.47	7.54	8.68	9.90	11.21	12.66	14.24	15.99
	P		2.02	2.03	2.06	2.12	2.19	2.27	2.35	2.43	2.50	2.56
	Q	35℃	4.31	5.35	6.40	7.48	8.62	9.83	11.14	12.57	14.14	
	P		1.79	1.81	1.85	1.92	1.99	2.07	2.16	2.23	2.30	
	Q	30℃	4.24	5.28	6.32	7.40	8.53	9.72	11.02	12.42		
	P		1.57	1.61	1.66	1.73	1.81	1.90	1.98	2.05		
	Q	25℃	4.16	5.19	6.22	7.28	8.38	9.55	10.81			
	P		1.36	1.41	1.47	1.55	1.64	1.72	1.81			
	Q	20℃	4.07	5.07	6.07	7.09	8.16	9.29	10.50			
	P		1.15	1.21	1.28	1.37	1.46	1.55	1.63			

注：冷凝器出口过冷度8. 3K, 过热度11. 1K

Note：Condenser Outlet Subcooling8.3K,Subheating 11.1K

制热量
Heating Capacity

制热量 HEATING CAPACITY

WW R22

带喷气增焓 *EVI*

型号Model	项目Item (KW)	Tc\Te	-30℃	-25℃	-20℃	-15℃	-10℃	-5℃	0℃	5℃	10℃	15℃
WW48KM-TFD-GV1	Q	70℃								16.28	18.05	20.06
	P									5.56	5.68	5.81
	Q	65℃		8.47	9.47	10.54	11.72	13.02	14.48	16.13	17.98	20.07
	P			4.60	4.58	4.61	4.67	4.75	4.85	4.97	5.08	5.20
	Q	60℃		7.91	9.00	10.17	11.43	12.81	14.34	16.05	17.97	20.11
	P			4.07	4.06	4.09	4.16	4.24	4.35	4.46	4.57	4.68
	Q	55℃	6.35	7.49	8.66	9.90	11.23	12.68	14.27	16.03	17.99	20.18
	P		3.64	3.61	3.61	3.66	3.72	3.81	3.92	4.03	4.13	4.23
	Q	50℃	5.99	7.20	8.43	9.73	11.11	12.60	14.23	16.03	18.02	20.23
	P		3.23	3.21	3.23	3.28	3.36	3.45	3.55	3.66	3.76	3.85
	Q	45℃	5.74	6.99	8.27	9.61	11.03	12.55	14.21	16.02	18.03	20.25
	P		2.87	2.86	2.90	2.96	3.04	3.13	3.24	3.34	3.44	3.52
	Q	40℃	5.56	6.86	8.17	9.53	10.96	12.50	14.16	15.98	17.98	20.19
	P		2.55	2.56	2.60	2.67	2.76	2.86	2.97	3.07	3.16	3.23
	Q	35℃	5.45	6.76	8.08	9.45	10.88	12.42	14.07	15.88	17.86	
	P		2.26	2.28	2.34	2.42	2.52	2.62	2.72	2.82	2.91	
	Q	30℃	5.35	6.67	7.99	9.35	10.77	12.28	13.91	15.69		
	P		1.99	2.03	2.10	2.19	2.29	2.39	2.50	2.59		
	Q	25℃	5.26	6.56	7.86	9.19	10.58	12.06	13.65			
	P		1.72	1.78	1.86	1.96	2.07	2.18	2.28			
	Q	20℃	5.14	6.40	7.67	8.96	10.30	11.73	13.26			
	P		1.45	1.52	1.62	1.73	1.84	1.95	2.06			
WW61KM-TFD-GV1	Q	70℃								21.52	23.87	26.53
	P									7.35	7.52	7.68
	Q	65℃		11.20	12.52	13.94	15.50	17.22	19.15	21.33	23.77	26.54
	P			6.09	6.06	6.09	6.17	6.28	6.42	6.57	6.72	6.88
	Q	60℃		10.46	11.90	13.44	15.11	16.94	18.97	21.23	23.76	26.60
	P			5.38	5.37	5.41	5.50	5.61	5.75	5.90	6.04	6.19
	Q	55℃	8.40	9.91	11.46	13.09	14.85	16.76	18.87	21.20	23.79	26.68
	P		4.81	4.77	4.78	4.83	4.93	5.04	5.18	5.32	5.47	5.60
	Q	50℃	7.92	9.51	11.15	12.86	14.69	16.66	18.82	21.20	23.83	26.76
	P		4.27	4.24	4.27	4.34	4.44	4.56	4.70	4.84	4.97	5.09
	Q	45℃	7.59	9.25	10.94	12.71	14.58	16.59	18.78	21.19	23.84	26.77
	P		3.79	3.79	3.83	3.91	4.02	4.15	4.28	4.42	4.55	4.65
	Q	40℃	7.36	9.07	10.80	12.60	14.50	16.53	18.73	21.13	23.78	26.71
	P		3.37	3.38	3.44	3.54	3.65	3.78	3.92	4.06	4.17	4.27
	Q	35℃	7.20	8.93	10.69	12.49	14.39	16.42	18.61	21.00	23.62	
	P		2.99	3.02	3.10	3.20	3.33	3.46	3.60	3.73	3.84	
	Q	30℃	7.08	8.81	10.56	12.36	14.24	16.24	18.40	20.74		
	P		2.63	2.68	2.77	2.89	3.02	3.17	3.30	3.43		
	Q	25℃	6.95	8.67	10.39	12.16	14.00	15.95	18.05			
	P		2.28	2.35	2.46	2.59	2.73	2.88	3.02			
	Q	20℃	6.79	8.47	10.14	11.85	13.63	15.51	17.53			
	P		1.92	2.02	2.14	2.28	2.43	2.58	2.72			

注：冷凝器出口过冷度8. 3K, 过热度11. 1K

Note：Condenser Outlet Subcooling8.3K,Subheating 11.1K

R22 **WW**

带喷气增焓 *EVI*

制热量
Heating Capacity

制热量 HEATING CAPACITY

型号Model	项目Item (KW)	Tc\Te	-30℃	-25℃	-20℃	-15℃	-10℃	-5℃	0℃	5℃	10℃	15℃
WW72KM-TFD-GV1	Q	70℃								25.19	27.93	31.05
	P									8.60	8.80	8.99
	Q	65℃		13.11	14.66	16.32	18.14	20.16	22.42	24.96	27.83	31.06
	P			7.12	7.10	7.13	7.22	7.35	7.51	7.68	7.87	8.05
	Q	60℃		12.24	13.93	15.73	17.68	19.83	22.20	24.85	27.81	31.13
	P			6.29	6.29	6.34	6.43	6.57	6.73	6.90	7.07	7.24
	Q	55℃	9.83	11.59	13.41	15.33	17.38	19.62	22.08	24.81	27.85	31.23
	P		5.63	5.58	5.59	5.66	5.76	5.90	6.06	6.23	6.40	6.55
	Q	50℃	9.27	11.14	13.05	15.05	17.19	19.50	22.03	24.81	27.89	31.31
	P		5.00	4.97	5.00	5.08	5.19	5.34	5.50	5.66	5.82	5.96
	Q	45℃	8.88	10.82	12.81	14.87	17.07	19.42	21.99	24.80	27.90	31.34
	P		4.44	4.43	4.48	4.58	4.70	4.85	5.01	5.17	5.32	5.45
	Q	40℃	8.61	10.61	12.64	14.75	16.97	19.34	21.92	24.73	27.83	31.26
	P		3.94	3.96	4.03	4.14	4.27	4.43	4.59	4.75	4.89	5.00
	Q	35℃	8.43	10.46	12.51	14.62	16.85	19.22	21.78	24.58	27.64	
	P		3.49	3.54	3.62	3.75	3.89	4.05	4.21	4.37	4.50	
	Q	30℃	8.29	10.32	12.36	14.46	16.67	19.01	21.53	24.28		
	P		3.07	3.14	3.25	3.38	3.54	3.71	3.87	4.02		
	Q	25℃	8.14	10.15	12.16	14.23	16.38	18.67	21.13			
	P		2.66	2.75	2.88	3.03	3.20	3.37	3.53			
	Q	20℃	7.95	9.91	11.87	13.87	15.95	18.15	20.52			
	P		2.25	2.36	2.50	2.67	2.85	3.02	3.19			
WW79KM-TFD-GV1	Q	70℃								27.51	30.50	33.91
	P									9.40	9.61	9.82
	Q	65℃		14.32	16.01	17.82	19.81	22.01	24.48	27.26	30.39	33.92
	P			7.78	7.75	7.79	7.89	8.03	8.20	8.39	8.59	8.79
	Q	60℃		13.36	15.21	17.18	19.31	21.65	24.24	27.13	30.37	34.00
	P			6.87	6.86	6.92	7.03	7.17	7.35	7.53	7.73	7.91
	Q	55℃	10.74	12.66	14.64	16.74	18.98	21.43	24.12	27.09	30.41	34.11
	P		6.15	6.09	6.11	6.18	6.30	6.45	6.62	6.80	6.99	7.15
	Q	50℃	10.12	12.16	14.25	16.44	18.77	21.29	24.05	27.09	30.46	34.20
	P		5.46	5.42	5.46	5.54	5.67	5.83	6.00	6.18	6.35	6.51
	Q	45℃	9.69	11.82	13.99	16.24	18.64	21.21	24.01	27.08	30.47	34.22
	P		4.85	4.84	4.89	5.00	5.13	5.30	5.47	5.65	5.81	5.95
	Q	40℃	9.40	11.59	13.80	16.10	18.53	21.12	23.94	27.01	30.39	34.13
	P		4.31	4.33	4.40	4.52	4.67	4.84	5.01	5.18	5.34	5.46
	Q	35℃	9.20	11.42	13.66	15.97	18.40	20.99	23.79	26.84	30.19	
	P		3.82	3.86	3.96	4.09	4.25	4.43	4.60	4.77	4.91	
	Q	30℃	9.05	11.26	13.50	15.80	18.20	20.76	23.51	26.51		
	P		3.36	3.43	3.54	3.69	3.87	4.05	4.22	4.39		
	Q	25℃	8.89	11.08	13.28	15.54	17.89	20.38	23.07			
	P		2.91	3.01	3.14	3.31	3.49	3.68	3.86			
	Q	20℃	8.68	10.82	12.96	15.14	17.42	19.82	22.41			
	P		2.45	2.58	2.73	2.92	3.11	3.30	3.48			

注：冷凝器出口过冷度8. 3K, 过热度11. 1K

Note：Condenser Outlet Subcooling8.3K,Subheating 11.1K

制热量
Heating Capacity

WW — **R22**

带喷气增焓 *EVI*

制热量 HEATING CAPACITY

型号Model	项目Item (KW)	Tc\Te	-30℃	-25℃	-20℃	-15℃	-10℃	-5℃	0℃	5℃	10℃	15℃
WW94KM-TFD-GV1	Q	70℃								32.35	35.87	39.87
	P									11.05	11.30	11.54
	Q	65℃		16.84	18.82	20.96	23.29	25.89	28.79	32.05	35.73	39.88
	P			9.15	9.11	9.16	9.27	9.44	9.64	9.87	10.10	10.33
	Q	60℃		15.71	17.89	20.20	22.71	25.46	28.51	31.91	35.71	39.98
	P			8.08	8.07	8.14	8.26	8.43	8.64	8.86	9.08	9.30
	Q	55℃	12.63	14.89	17.22	19.68	22.32	25.20	28.36	31.86	35.76	40.11
	P		7.23	7.17	7.18	7.26	7.40	7.58	7.79	8.00	8.21	8.41
	Q	50℃	11.91	14.30	16.76	19.33	22.07	25.04	28.28	31.86	35.82	40.21
	P		6.42	6.38	6.42	6.52	6.67	6.85	7.06	7.27	7.47	7.65
	Q	45℃	11.40	13.90	16.45	19.10	21.91	24.94	28.23	31.84	35.83	40.24
	P		5.70	5.69	5.75	5.88	6.04	6.23	6.44	6.64	6.83	6.99
	Q	40℃	11.06	13.62	16.23	18.93	21.79	24.84	28.15	31.76	35.74	40.14
	P		5.06	5.09	5.17	5.31	5.49	5.69	5.89	6.09	6.27	6.42
	Q	35℃	10.82	13.43	16.06	18.78	21.63	24.68	27.97	31.56	35.50	
	P		4.49	4.54	4.65	4.81	5.00	5.20	5.41	5.61	5.78	
	Q	30℃	10.64	13.25	15.87	18.57	21.40	24.41	27.65	31.18		
	P		3.95	4.03	4.17	4.34	4.55	4.76	4.97	5.16		
	Q	25℃	10.45	13.03	15.62	18.27	21.03	23.97	27.13			
	P		3.42	3.53	3.70	3.89	4.11	4.33	4.54			
	Q	20℃	10.21	12.73	15.24	17.81	20.48	23.31	26.35			
	P		2.88	3.03	3.22	3.43	3.66	3.88	4.10			
WW108KM-TFD-GV1	Q	70℃								37.62	41.72	46.37
	P									12.85	13.14	13.43
	Q	65℃		19.58	21.89	24.37	27.09	30.10	33.48	37.28	41.56	46.38
	P			10.64	10.60	10.65	10.78	10.98	11.21	11.48	11.75	12.02
	Q	60℃		18.28	20.81	23.50	26.41	29.61	33.15	37.11	41.53	46.49
	P			9.40	9.39	9.46	9.61	9.81	10.05	10.30	10.57	10.81
	Q	55℃	14.69	17.31	20.03	22.89	25.96	29.30	32.98	37.05	41.59	46.64
	P		8.41	8.33	8.35	8.45	8.61	8.82	9.05	9.31	9.55	9.78
	Q	50℃	13.85	16.63	19.49	22.48	25.67	29.12	32.89	37.05	41.65	46.77
	P		7.46	7.42	7.46	7.58	7.76	7.97	8.21	8.45	8.69	8.90
	Q	45℃	13.26	16.16	19.13	22.21	25.49	29.01	32.83	37.03	41.67	46.80
	P		6.63	6.62	6.69	6.83	7.02	7.25	7.48	7.72	7.95	8.13
	Q	40℃	12.86	15.85	18.88	22.02	25.34	28.89	32.73	36.94	41.57	46.68
	P		5.89	5.92	6.02	6.18	6.38	6.61	6.86	7.09	7.30	7.47
	Q	35℃	12.59	15.61	18.68	21.84	25.16	28.70	32.53	36.70	41.29	
	P		5.22	5.28	5.41	5.60	5.81	6.05	6.29	6.52	6.72	
	Q	30℃	12.37	15.41	18.46	21.60	24.89	28.39	32.16	36.26		
	P		4.59	4.69	4.85	5.05	5.29	5.53	5.78	6.00		
	Q	25℃	12.16	15.16	18.16	21.25	24.46	27.88	31.55			
	P		3.98	4.11	4.30	4.53	4.78	5.03	5.27			
	Q	20℃	11.87	14.80	17.72	20.71	23.82	27.11	30.65			
	P		3.35	3.52	3.74	3.99	4.25	4.52	4.76			

注：冷凝器出口过冷度8. 3K, 过热度11. 1K

Note：Condenser Outlet Subcooling8.3K,Subheating 11.1K

R22 — **WW**

带喷气增焓 *EVI*

制热量
Heating Capacity

制热量 HEATING CAPACITY

型号Model	项目Item (KW)	Tc\Te	-30℃	-25℃	-20℃	-15℃	-10℃	-5℃	0℃	5℃	10℃	15℃
WW125KM-TFD-GV1	Q	70℃								42.31	46.91	52.15
	P									14.45	14.77	15.10
	Q	65℃		22.02	24.62	27.41	30.47	33.86	37.65	41.92	46.73	52.16
	P			11.96	11.92	11.98	12.13	12.34	12.61	12.91	13.21	13.52
	Q	60℃		20.55	23.40	26.42	29.70	33.30	37.28	41.73	46.71	52.29
	P			10.57	10.56	10.64	10.81	11.03	11.30	11.59	11.88	12.16
	Q	55℃	16.52	19.47	22.52	25.74	29.19	32.95	37.09	41.67	46.77	52.45
	P		9.46	9.37	9.39	9.50	9.68	9.91	10.18	10.46	10.74	11.00
	Q	50℃	15.57	18.70	21.92	25.28	28.87	32.75	36.99	41.67	46.84	52.59
	P		8.39	8.34	8.39	8.52	8.72	8.96	9.23	9.51	9.77	10.01
	Q	45℃	14.91	18.18	21.51	24.98	28.66	32.62	36.92	41.65	46.86	52.63
	P		7.45	7.44	7.53	7.68	7.90	8.15	8.42	8.69	8.94	9.15
	Q	40℃	14.46	17.82	21.23	24.76	28.49	32.49	36.81	41.54	46.75	52.49
	P		6.62	6.65	6.77	6.95	7.18	7.44	7.71	7.97	8.21	8.40
	Q	35℃	14.15	17.56	21.00	24.56	28.29	32.28	36.58	41.27	46.43	
	P		5.87	5.94	6.09	6.29	6.54	6.81	7.08	7.33	7.56	
	Q	30℃	13.91	17.32	20.76	24.29	27.99	31.92	36.16	40.78		
	P		5.16	5.27	5.45	5.68	5.95	6.22	6.50	6.74		
	Q	25℃	13.67	17.04	20.43	23.89	27.51	31.35	35.48			
	P		4.47	4.62	4.83	5.09	5.37	5.66	5.93			
	Q	20℃	13.35	16.64	19.93	23.29	26.78	30.49	34.47			
	P		3.77	3.96	4.21	4.49	4.78	5.08	5.36			
WW138KM-TFD-GV1	Q	70℃								48.60	53.89	59.90
	P									16.60	16.97	17.34
	Q	65℃		25.30	28.28	31.49	35.00	38.89	43.25	48.15	53.68	59.92
	P			13.74	13.69	13.76	13.93	14.18	14.48	14.83	15.18	15.53
	Q	60℃		23.61	26.88	30.35	34.12	38.25	42.83	47.94	53.65	60.06
	P			12.14	12.13	12.23	12.41	12.67	12.98	13.31	13.65	13.97
	Q	55℃	18.97	22.37	25.87	29.57	33.53	37.85	42.60	47.87	53.72	60.25
	P		10.87	10.77	10.79	10.91	11.12	11.39	11.70	12.02	12.34	12.64
	Q	50℃	17.89	21.48	25.18	29.04	33.16	37.62	42.49	47.86	53.81	60.41
	P		9.64	9.58	9.64	9.79	10.02	10.30	10.60	10.92	11.22	11.49
	Q	45℃	17.13	20.88	24.71	28.70	32.92	37.47	42.42	47.84	53.83	60.46
	P		8.56	8.55	8.65	8.83	9.07	9.36	9.67	9.98	10.26	10.51
	Q	40℃	16.61	20.47	24.39	28.45	32.73	37.32	42.29	47.72	53.70	60.30
	P		7.61	7.64	7.77	7.98	8.25	8.55	8.86	9.16	9.43	9.64
	Q	35℃	16.26	20.17	24.13	28.21	32.50	37.08	42.02	47.41	53.33	
	P		6.74	6.82	6.99	7.23	7.51	7.82	8.13	8.42	8.68	
	Q	30℃	15.98	19.90	23.85	27.90	32.15	36.67	41.54	46.84		
	P		5.93	6.06	6.26	6.53	6.83	7.15	7.46	7.75		
	Q	25℃	15.70	19.58	23.47	27.45	31.60	36.01	40.76			
	P		5.14	5.31	5.55	5.85	6.17	6.50	6.81			
	Q	20℃	15.34	19.12	22.90	26.75	30.77	35.02	39.59			
	P		4.33	4.55	4.83	5.15	5.50	5.84	6.15			

注：冷凝器出口过冷度8. 3K, 过热度11. 1K

Note：Condenser Outlet Subcooling8.3K,Subheating 11.1K

制热量
Heating Capacity

制热量 HEATING CAPACITY

WW R22

带喷气增焓 *EVI*

型号Model	项目Item (KW)	Tc\Te	-30℃	-25℃	-20℃	-15℃	-10℃	-5℃	0℃	5℃	10℃	15℃
WW154KM-TFD-GV1	Q	70℃								53.24	59.03	65.62
	P									18.18	18.59	19.00
	Q	65℃		27.71	30.98	34.49	38.33	42.60	47.37	52.75	58.80	65.63
	P			15.05	15.00	15.07	15.26	15.53	15.87	16.24	16.63	17.01
	Q	60℃		25.86	29.44	33.25	37.37	41.90	46.91	52.51	58.77	65.79
	P			13.30	13.28	13.39	13.60	13.88	14.22	14.58	14.95	15.30
	Q	55℃	20.78	24.50	28.34	32.39	36.73	41.46	46.67	52.43	58.85	66.00
	P		11.91	11.79	11.82	11.95	12.18	12.48	12.81	13.17	13.52	13.84
	Q	50℃	19.59	23.53	27.58	31.81	36.33	41.21	46.55	52.43	58.94	66.18
	P		10.56	10.49	10.56	10.73	10.97	11.28	11.62	11.96	12.29	12.59
	Q	45℃	18.76	22.87	27.07	31.43	36.06	41.04	46.46	52.41	58.96	66.22
	P		9.38	9.37	9.47	9.67	9.94	10.25	10.59	10.93	11.24	11.51
	Q	40℃	18.20	22.42	26.71	31.16	35.85	40.88	46.32	52.27	58.82	66.05
	P		8.33	8.37	8.52	8.74	9.03	9.36	9.70	10.03	10.33	10.56
	Q	35℃	17.81	22.09	26.43	30.90	35.60	40.61	46.03	51.94	58.42	
	P		7.39	7.47	7.66	7.92	8.23	8.57	8.91	9.23	9.51	
	Q	30℃	17.51	21.80	26.12	30.57	35.22	40.17	45.50	51.31		
	P		6.50	6.63	6.86	7.15	7.48	7.83	8.17	8.49		
	Q	25℃	17.20	21.45	25.70	30.06	34.62	39.45	44.64			
	P		5.63	5.82	6.08	6.40	6.76	7.12	7.46			
	Q	20℃	16.80	20.94	25.08	29.30	33.70	38.36	43.37			
	P		4.75	4.98	5.29	5.65	6.02	6.39	6.74			
WW170KM-TFD-GV1	Q	70℃								63.40	70.30	78.15
	P									21.65	22.14	22.62
	Q	65℃		33.00	36.89	41.07	45.65	50.73	56.42	62.82	70.03	78.16
	P			17.92	17.86	17.95	18.17	18.50	18.90	19.34	19.80	20.25
	Q	60℃		30.80	35.06	39.60	44.51	49.89	55.87	62.53	69.99	78.35
	P			15.84	15.82	15.95	16.19	16.53	16.93	17.36	17.80	18.22
	Q	55℃	24.75	29.18	33.75	38.57	43.75	49.38	55.58	62.44	70.08	78.60
	P		14.18	14.04	14.07	14.24	14.51	14.86	15.26	15.68	16.10	16.48
	Q	50℃	23.33	28.03	32.84	37.89	43.26	49.08	55.43	62.44	70.20	78.81
	P		12.57	12.50	12.57	12.77	13.07	13.43	13.83	14.25	14.64	14.99
	Q	45℃	22.34	27.24	32.23	37.43	42.95	48.88	55.33	62.41	70.22	78.87
	P		11.17	11.15	11.28	11.51	11.83	12.21	12.61	13.02	13.39	13.71
	Q	40℃	21.67	26.70	31.81	37.11	42.70	48.68	55.16	62.25	70.05	78.66
	P		9.93	9.97	10.14	10.41	10.76	11.15	11.55	11.94	12.30	12.58
	Q	35℃	21.21	26.31	31.47	36.80	42.40	48.37	54.82	61.85	69.57	
	P		8.80	8.90	9.12	9.43	9.80	10.20	10.61	10.99	11.32	
	Q	30℃	20.85	25.96	31.11	36.40	41.94	47.84	54.19	61.10		
	P		7.74	7.90	8.17	8.51	8.91	9.33	9.73	10.11		
	Q	25℃	20.49	25.54	30.61	35.80	41.22	46.98	53.17			
	P		6.70	6.93	7.24	7.63	8.05	8.48	8.89			
	Q	20℃	20.01	24.94	29.87	34.90	40.14	45.68	51.65			
	P		5.65	5.94	6.30	6.72	7.17	7.61	8.03			

注：冷凝器出口过冷度8. 3K, 过热度11. 1K

Note：Condenser Outlet Subcooling8.3K,Subheating 11.1K

R22 **WW**

带喷气增焓 *EVI*

制热量
Heating Capacity

制热量 HEATING CAPACITY

型号Model	项目Item (KW)	Tc\Te	-30℃	-25℃	-20℃	-15℃	-10℃	-5℃	0℃	5℃	10℃	15℃
WW250KM-TWD-GV1	Q	70℃								82.78	91.80	102.04
	P									28.27	28.91	29.54
	Q	65℃		43.09	48.17	53.63	59.61	66.24	73.67	82.02	91.44	102.06
	P			23.40	23.32	23.44	23.73	24.15	24.67	25.25	25.86	26.45
	Q	60℃		40.21	45.78	51.70	58.11	65.15	72.95	81.65	91.39	102.30
	P			20.68	20.66	20.82	21.15	21.59	22.11	22.67	23.25	23.79
	Q	55℃	32.32	38.10	44.07	50.36	57.12	64.48	72.57	81.53	91.51	102.63
	P		18.51	18.34	18.38	18.59	18.94	19.40	19.92	20.48	21.02	21.52
	Q	50℃	30.47	36.59	42.88	49.47	56.49	64.08	72.38	81.53	91.66	102.91
	P		16.42	16.32	16.42	16.68	17.07	17.54	18.06	18.60	19.12	19.58
	Q	45℃	29.17	35.56	42.09	48.88	56.08	63.82	72.25	81.49	91.69	102.98
	P		14.58	14.56	14.73	15.03	15.45	15.94	16.47	16.99	17.48	17.90
	Q	40℃	28.30	34.87	41.54	48.46	55.75	63.56	72.03	81.28	91.47	102.71
	P		12.96	13.02	13.24	13.60	14.05	14.56	15.08	15.60	16.06	16.43
	Q	35℃	27.70	34.36	41.10	48.05	55.36	63.16	71.58	80.76	90.84	
	P		11.48	11.62	11.91	12.31	12.79	13.32	13.85	14.35	14.78	
	Q	30℃	27.23	33.90	40.62	47.53	54.77	62.46	70.76	79.78		
	P		10.10	10.32	10.67	11.12	11.63	12.18	12.71	13.20		
	Q	25℃	26.75	33.35	39.97	46.75	53.83	61.34	69.42			
	P		8.75	9.04	9.46	9.96	10.51	11.07	11.61			
	Q	20℃	26.12	32.56	39.00	45.57	52.41	59.65	67.44			
	P		7.38	7.75	8.23	8.78	9.36	9.94	10.48			
WW300KM-TWD-GV1	Q	70℃								101.89	112.98	125.59
	P									34.80	35.58	36.36
	Q	65℃		53.03	59.28	66.01	73.37	81.53	90.67	100.95	112.54	125.61
	P			28.81	28.70	28.85	29.20	29.73	30.37	31.08	31.82	32.55
	Q	60℃		49.50	56.35	63.63	71.52	80.18	89.79	100.49	112.48	125.91
	P			25.45	25.42	25.63	26.03	26.57	27.21	27.91	28.61	29.28
	Q	55℃	39.77	46.89	54.24	61.99	70.30	79.36	89.32	100.35	112.63	126.32
	P		22.79	22.57	22.62	22.88	23.32	23.88	24.52	25.20	25.87	26.49
	Q	50℃	37.50	45.04	52.78	60.88	69.53	78.87	89.09	100.34	112.81	126.65
	P		20.21	20.09	20.21	20.53	21.00	21.59	22.23	22.89	23.53	24.09
	Q	45℃	35.91	43.77	51.80	60.16	69.02	78.55	88.92	100.30	112.85	126.74
	P		17.95	17.93	18.13	18.50	19.02	19.62	20.27	20.92	21.52	22.03
	Q	40℃	34.83	42.91	51.13	59.64	68.62	78.23	88.65	100.04	112.57	126.42
	P		15.95	16.02	16.30	16.74	17.29	17.91	18.56	19.20	19.76	20.22
	Q	35℃	34.09	42.29	50.58	59.14	68.13	77.73	88.09	99.40	111.81	
	P		14.13	14.30	14.66	15.15	15.75	16.39	17.05	17.66	18.19	
	Q	30℃	33.51	41.72	50.00	58.50	67.40	76.88	87.08	98.20		
	P		12.43	12.70	13.13	13.68	14.32	14.99	15.64	16.24		
	Q	25℃	32.92	41.04	49.19	57.54	66.25	75.50	85.44			
	P		10.77	11.13	11.64	12.26	12.93	13.62	14.28			
	Q	20℃	32.15	40.08	48.00	56.09	64.50	73.42	83.00			
	P		9.08	9.54	10.13	10.80	11.52	12.23	12.90			

注：冷凝器出口过冷度8. 3K, 过热度11. 1K

Note：Condenser Outlet Subcooling8.3K,Subheating 11.1K

制热量
Heating Capacity

WW — **R134a**

不带喷气增焓*W/O EVI*

制热量 HEATING CAPACITY

型号Model	项目Item (KW)	Tc\Te	-15℃	-10℃	-5℃	0℃	5℃	10℃	15℃	20℃	25℃	30℃	35℃	40℃
WW24KF-TFD-GN1	Q	85℃					4.10	4.51	5.02	5.66	6.43	7.38	8.50	9.82
	P						2.02	2.04	2.06	2.08	2.09	2.11	2.12	2.14
	Q	80℃				3.71	4.08	4.55	5.12	5.82	6.67	7.68	8.87	10.27
	P					1.81	1.84	1.86	1.88	1.89	1.91	1.92	1.93	1.95
	Q	75℃			3.32	3.68	4.10	4.63	5.26	6.02	6.93	8.00	9.27	10.73
	P				1.62	1.65	1.67	1.69	1.71	1.72	1.74	1.75	1.77	1.78
	Q	70℃		2.93	3.27	3.67	4.15	4.73	5.41	6.23	7.20	8.34	9.67	11.20
	P			1.45	1.48	1.50	1.52	1.54	1.56	1.57	1.58	1.60	1.61	1.63
	Q	65℃	2.52	2.87	3.25	3.70	4.23	4.85	5.59	6.46	7.49	8.69	10.08	11.68
	P		1.29	1.32	1.35	1.37	1.39	1.40	1.42	1.43	1.44	1.46	1.47	1.50
	Q	60℃	2.46	2.84	3.26	3.75	4.32	4.99	5.77	6.70	7.78	9.04	10.49	12.15
	P		1.17	1.20	1.23	1.25	1.26	1.28	1.29	1.30	1.32	1.33	1.35	1.38
	Q	55℃	2.42	2.83	3.29	3.82	4.43	5.14	5.97	6.95	8.08	9.39	10.90	12.62
	P		1.07	1.10	1.12	1.13	1.15	1.16	1.17	1.19	1.20	1.22	1.24	1.27
	Q	50℃	2.41	2.85	3.34	3.90	4.55	5.30	6.18	7.20	8.38	9.74		
	P		0.98	1.00	1.02	1.03	1.05	1.06	1.07	1.09	1.10	1.12		
	Q	45℃	2.42	2.88	3.40	4.00	4.68	5.47	6.38	7.45	8.67			
	P		0.89	0.91	0.93	0.94	0.95	0.97	0.98	1.00	1.01			
	Q	40℃	2.44	2.93	3.48	4.10	4.81	5.63	6.59	7.69				
	P		0.81	0.83	0.85	0.86	0.87	0.88	0.90	0.91				
	Q	35℃	2.47	2.98	3.55	4.20	4.94	5.80	6.78					
	P		0.74	0.76	0.77	0.79	0.80	0.81	0.83					
	Q	30℃	2.51	3.04	3.63	4.30	5.07	5.95						
	P		0.68	0.69	0.71	0.72	0.73	0.74						
WW34KF-TFD-GN1	Q	85℃					6.42	7.06	7.86	8.86	10.08	11.55	13.31	15.38
	P						3.16	3.20	3.23	3.26	3.28	3.30	3.32	3.35
	Q	80℃				5.81	6.40	7.13	8.03	9.13	10.45	12.03	13.90	16.09
	P					2.84	2.88	2.91	2.94	2.97	2.99	3.01	3.03	3.06
	Q	75℃			5.20	5.76	6.43	7.25	8.24	9.43	10.85	12.54	14.52	16.81
	P				2.54	2.59	2.62	2.65	2.68	2.70	2.72	2.74	2.77	2.79
	Q	70℃		4.58	5.13	5.76	6.51	7.40	8.48	9.76	11.28	13.07	15.15	17.55
	P			2.27	2.32	2.36	2.39	2.41	2.44	2.46	2.48	2.50	2.53	2.56
	Q	65℃	3.95	4.49	5.10	5.80	6.62	7.59	8.75	10.12	11.73	13.61	15.79	18.30
	P		2.02	2.07	2.11	2.14	2.17	2.20	2.22	2.24	2.26	2.28	2.31	2.34
	Q	60℃	3.85	4.45	5.11	5.87	6.76	7.81	9.05	10.50	12.19	14.16	16.43	19.04
	P		1.84	1.88	1.92	1.95	1.98	2.00	2.02	2.04	2.06	2.09	2.12	2.16
	Q	55℃	3.79	4.44	5.16	5.98	6.94	8.05	9.36	10.88	12.66	14.71	17.08	19.78
	P		1.68	1.72	1.75	1.78	1.80	1.82	1.84	1.86	1.88	1.91	1.95	1.99
	Q	50℃	3.77	4.47	5.24	6.11	7.12	8.30	9.68	11.27	13.13	15.26		
	P		1.53	1.57	1.59	1.62	1.64	1.66	1.68	1.70	1.73	1.76		
	Q	45℃	3.78	4.52	5.33	6.26	7.33	8.56	10.00	11.66	13.59			
	P		1.40	1.43	1.45	1.48	1.50	1.51	1.54	1.56	1.59			
	Q	40℃	3.82	4.59	5.45	6.42	7.53	8.82	10.32	12.05				
	P		1.28	1.30	1.33	1.35	1.37	1.39	1.41	1.43				
	Q	35℃	3.87	4.68	5.57	6.58	7.74	9.08	10.63					
	P		1.17	1.19	1.21	1.23	1.25	1.27	1.29					
	Q	30℃	3.94	4.77	5.69	6.74	7.94	9.33						
	P		1.07	1.09	1.11	1.13	1.14	1.17						

注：冷凝器出口过冷度5. 0K, 过热度5. 0K

Note：Condenser Outlet Subcooling 5.0K,Subheating 5.0K

R134a — **WW**

不带喷气增焓*W/O EVI*

制热量
Heating Capacity

制热量 HEATING CAPACITY

型号Model	项目Item (KW)	Tc\Te	-15℃	-10℃	-5℃	0℃	5℃	10℃	15℃	20℃	25℃	30℃	35℃	40℃
WW48KF-TFD-GN1	Q	85℃					8.11	8.91	9.93	11.19	12.73	14.59	16.81	19.42
	P						3.99	4.04	4.08	4.11	4.14	4.17	4.20	4.22
	Q	80℃				7.34	8.08	9.00	10.14	11.52	13.20	15.20	17.56	20.32
	P					3.59	3.64	3.68	3.72	3.75	3.77	3.80	3.83	3.86
	Q	75℃			6.57	7.27	8.12	9.15	10.40	11.91	13.71	15.83	18.33	21.23
	P				3.21	3.27	3.31	3.35	3.38	3.41	3.44	3.46	3.49	3.53
	Q	70℃		5.79	6.47	7.27	8.22	9.35	10.71	12.33	14.25	16.50	19.13	22.17
	P			2.87	2.93	2.98	3.02	3.05	3.08	3.10	3.13	3.16	3.19	3.23
	Q	65℃	4.99	5.67	6.44	7.32	8.36	9.59	11.05	12.78	14.81	17.19	19.94	23.11
	P		2.55	2.61	2.66	2.71	2.74	2.77	2.80	2.83	2.85	2.88	2.92	2.96
	Q	60℃	4.86	5.62	6.45	7.42	8.54	9.87	11.42	13.25	15.39	17.88	20.75	24.05
	P		2.32	2.38	2.43	2.47	2.50	2.52	2.55	2.58	2.60	2.64	2.67	2.72
	Q	55℃	4.79	5.61	6.52	7.55	8.76	10.17	11.82	13.74	15.99	18.58	21.56	24.98
	P		2.12	2.17	2.21	2.24	2.27	2.30	2.32	2.35	2.38	2.42	2.46	2.51
	Q	50℃	4.77	5.64	6.61	7.72	9.00	10.49	12.22	14.24	16.58	19.27		
	P		1.93	1.98	2.01	2.04	2.07	2.10	2.12	2.15	2.18	2.22		
	Q	45℃	4.78	5.71	6.73	7.90	9.25	10.81	12.63	14.73	17.16			
	P		1.76	1.80	1.84	1.86	1.89	1.91	1.94	1.97	2.00			
	Q	40℃	4.82	5.80	6.88	8.10	9.51	11.14	13.03	15.21				
	P		1.61	1.65	1.68	1.70	1.72	1.75	1.78	1.81				
	Q	35℃	4.89	5.90	7.03	8.31	9.78	11.47	13.42					
	P		1.47	1.50	1.53	1.55	1.58	1.60	1.63					
	Q	30℃	4.97	6.02	7.19	8.51	10.03	11.78						
	P		1.35	1.37	1.40	1.42	1.45	1.47						
WW61KF-TFD-GN1	Q	85℃					10.72	11.79	13.13	14.79	16.83	19.30	22.23	25.68
	P						5.28	5.34	5.40	5.44	5.48	5.51	5.55	5.59
	Q	80℃				9.70	10.69	11.90	13.41	15.24	17.45	20.09	23.22	26.87
	P					4.74	4.81	4.87	4.91	4.95	4.99	5.02	5.06	5.10
	Q	75℃			8.68	9.61	10.74	12.10	13.75	15.74	18.12	20.94	24.24	28.08
	P				4.25	4.32	4.38	4.43	4.47	4.51	4.54	4.58	4.62	4.66
	Q	70℃		7.65	8.56	9.61	10.86	12.36	14.16	16.30	18.84	21.82	25.30	29.31
	P			3.79	3.87	3.93	3.99	4.03	4.07	4.10	4.14	4.18	4.22	4.27
	Q	65℃	6.60	7.50	8.51	9.68	11.05	12.68	14.61	16.90	19.59	22.73	26.37	30.56
	P		3.37	3.45	3.52	3.58	3.63	3.67	3.70	3.74	3.77	3.81	3.86	3.91
	Q	60℃	6.43	7.43	8.54	9.81	11.30	13.05	15.11	17.53	20.36	23.65	27.44	31.80
	P		3.07	3.15	3.21	3.26	3.30	3.34	3.37	3.41	3.44	3.49	3.54	3.60
	Q	55℃	6.33	7.41	8.62	9.99	11.58	13.44	15.63	18.17	21.14	24.57	28.52	33.03
	P		2.80	2.87	2.92	2.97	3.01	3.04	3.07	3.11	3.15	3.19	3.25	3.32
	Q	50℃	6.30	7.46	8.74	10.21	11.90	13.87	16.16	18.83	21.92	25.49		
	P		2.55	2.61	2.66	2.70	2.74	2.77	2.80	2.84	2.88	2.94		
	Q	45℃	6.32	7.54	8.91	10.45	12.23	14.30	16.70	19.48	22.69			
	P		2.33	2.38	2.43	2.46	2.50	2.53	2.56	2.60	2.65			
	Q	40℃	6.38	7.66	9.09	10.72	12.58	14.74	17.23	20.12				
	P		2.13	2.18	2.21	2.25	2.28	2.31	2.35	2.39				
	Q	35℃	6.47	7.81	9.30	10.99	12.93	15.16	17.75					
	P		1.95	1.99	2.02	2.05	2.09	2.12	2.16					
	Q	30℃	6.58	7.96	9.50	11.25	13.26	15.57						
	P		1.78	1.82	1.85	1.88	1.91	1.95						

注：冷凝器出口过冷度5. 0K, 过热度5. 0K

Note：Condenser Outlet Subcooling 5.0K,Subheating 5.0K

制热量
Heating Capacity

WW R134a

不带喷气增焓W/O EVI

制热量 HEATING CAPACITY

型号Model	项目Item (KW)	Tc\Te	-15℃	-10℃	-5℃	0℃	5℃	10℃	15℃	20℃	25℃	30℃	35℃	40℃
WW72KF-TFD-GN1	Q	85℃					12.55	13.80	15.37	17.32	19.70	22.58	26.02	30.06
	P						6.18	6.26	6.32	6.37	6.41	6.45	6.49	6.54
	Q	80℃				11.35	12.51	13.93	15.69	17.84	20.43	23.52	27.17	31.44
	P					5.55	5.63	5.70	5.75	5.80	5.84	5.88	5.92	5.97
	Q	75℃			10.16	11.25	12.57	14.16	16.10	18.43	21.21	24.51	28.37	32.86
	P				4.97	5.06	5.13	5.19	5.23	5.28	5.32	5.36	5.40	5.46
	Q	70℃		8.96	10.02	11.25	12.72	14.47	16.57	19.08	22.05	25.54	29.61	34.31
	P			4.43	4.53	4.61	4.67	4.72	4.76	4.80	4.84	4.89	4.94	5.00
	Q	65℃	7.72	8.78	9.96	11.33	12.94	14.84	17.10	19.78	22.93	26.60	30.86	35.76
	P		3.94	4.04	4.12	4.19	4.25	4.29	4.34	4.37	4.42	4.46	4.52	4.58
	Q	60℃	7.53	8.69	9.99	11.48	13.22	15.27	17.68	20.51	23.83	27.68	32.12	37.22
	P		3.59	3.68	3.76	3.82	3.87	3.91	3.95	3.99	4.03	4.08	4.14	4.21
	Q	55℃	7.41	8.68	10.08	11.69	13.56	15.74	18.29	21.27	24.74	28.76	33.38	38.66
	P		3.28	3.36	3.42	3.47	3.52	3.56	3.60	3.64	3.68	3.74	3.81	3.89
	Q	50℃	7.38	8.73	10.23	11.95	13.93	16.23	18.91	22.04	25.66	29.83		
	P		2.99	3.06	3.12	3.16	3.21	3.24	3.28	3.33	3.38	3.44		
	Q	45℃	7.40	8.83	10.42	12.23	14.32	16.74	19.54	22.80	26.56			
	P		2.73	2.79	2.84	2.88	2.92	2.96	3.00	3.05	3.10			
	Q	40℃	7.47	8.97	10.64	12.54	14.73	17.25	20.17	23.55				
	P		2.49	2.55	2.59	2.63	2.67	2.71	2.75	2.80				
	Q	35℃	7.57	9.14	10.88	12.86	15.13	17.75	20.78					
	P		2.28	2.33	2.37	2.40	2.44	2.48	2.53					
	Q	30℃	7.70	9.32	11.12	13.17	15.52	18.23						
	P		2.08	2.12	2.16	2.20	2.24	2.28						
WW79KF-TFD-GN1	Q	85℃					13.70	15.06	16.78	18.91	21.52	24.66	28.41	32.83
	P						6.75	6.83	6.90	6.95	7.00	7.05	7.09	7.14
	Q	80℃				12.40	13.66	15.22	17.13	19.48	22.31	25.68	29.67	34.34
	P					6.06	6.15	6.22	6.28	6.33	6.38	6.42	6.47	6.52
	Q	75℃			11.10	12.29	13.72	15.47	17.58	20.12	23.16	26.76	30.98	35.89
	P				5.43	5.52	5.60	5.66	5.72	5.76	5.81	5.85	5.90	5.96
	Q	70℃		9.78	10.94	12.29	13.89	15.80	18.10	20.84	24.08	27.89	32.33	37.46
	P			4.84	4.95	5.03	5.10	5.15	5.20	5.25	5.29	5.34	5.39	5.45
	Q	65℃	8.43	9.59	10.88	12.37	14.13	16.21	18.68	21.60	25.04	29.05	33.70	39.05
	P		4.30	4.41	4.50	4.58	4.64	4.69	4.73	4.78	4.82	4.87	4.93	5.00
	Q	60℃	8.22	9.49	10.91	12.54	14.44	16.67	19.31	22.40	26.02	30.22	35.08	40.64
	P		3.92	4.02	4.10	4.17	4.22	4.27	4.31	4.35	4.40	4.45	4.52	4.60
	Q	55℃	8.10	9.48	11.01	12.77	14.80	17.18	19.97	23.23	27.02	31.40	36.45	42.21
	P		3.58	3.67	3.74	3.79	3.84	3.89	3.93	3.97	4.02	4.08	4.16	4.25
	Q	50℃	8.05	9.53	11.17	13.05	15.21	17.72	20.65	24.06	28.02	32.57		
	P		3.27	3.34	3.40	3.46	3.50	3.54	3.58	3.63	3.69	3.75		
	Q	45℃	8.08	9.64	11.38	13.36	15.64	18.28	21.34	24.90	29.00			
	P		2.98	3.05	3.10	3.15	3.19	3.23	3.28	3.33	3.39			
	Q	40℃	8.15	9.80	11.62	13.70	16.08	18.84	22.03	25.71				
	P		2.72	2.78	2.83	2.87	2.91	2.96	3.00	3.06				
	Q	35℃	8.27	9.98	11.88	14.04	16.52	19.38	22.69					
	P		2.49	2.54	2.58	2.63	2.67	2.71	2.76					
	Q	30℃	8.41	10.17	12.15	14.38	16.95	19.90						
	P		2.27	2.32	2.36	2.40	2.44	2.49						

注：冷凝器出口过冷度5. 0K, 过热度5. 0K

Note：Condenser Outlet Subcooling 5.0K,Subheating 5.0K

R134a WW

不带喷气增焓W/O EVI

制热量
Heating Capacity

制热量 HEATING CAPACITY

型号Model	项目Item (KW)	Tc\Te	-15℃	-10℃	-5℃	0℃	5℃	10℃	15℃	20℃	25℃	30℃	35℃	40℃
WW94KF-TFD-GN1	Q	85℃					16.11	17.71	19.73	22.24	25.30	29.00	33.41	38.60
	P						7.94	8.03	8.11	8.18	8.23	8.28	8.34	8.40
	Q	80℃				14.58	16.06	17.89	20.15	22.90	26.23	30.20	34.89	40.38
	P					7.13	7.23	7.32	7.39	7.44	7.50	7.55	7.61	7.67
	Q	75℃			13.05	14.45	16.14	18.19	20.67	23.66	27.24	31.47	36.43	42.20
	P				6.38	6.49	6.59	6.66	6.72	6.78	6.83	6.88	6.94	7.01
	Q	70℃		11.50	12.86	14.45	16.33	18.58	21.28	24.50	28.31	32.80	38.02	44.06
	P			5.69	5.82	5.91	5.99	6.06	6.12	6.17	6.22	6.28	6.34	6.41
	Q	65℃	9.92	11.28	12.79	14.55	16.61	19.06	21.96	25.40	29.44	34.16	39.63	45.92
	P		5.06	5.19	5.30	5.38	5.45	5.51	5.57	5.62	5.67	5.73	5.80	5.88
	Q	60℃	9.66	11.16	12.83	14.74	16.98	19.61	22.70	26.34	30.60	35.54	41.25	47.79
	P		4.61	4.73	4.82	4.90	4.96	5.02	5.07	5.12	5.17	5.24	5.32	5.41
	Q	55℃	9.52	11.14	12.95	15.01	17.41	20.21	23.48	27.31	31.77	36.93	42.86	49.64
	P		4.21	4.31	4.39	4.46	4.52	4.57	4.62	4.67	4.73	4.80	4.89	4.99
	Q	50℃	9.47	11.21	13.14	15.34	17.88	20.84	24.29	28.30	32.95	38.31		
	P		3.84	3.93	4.00	4.06	4.12	4.17	4.22	4.27	4.33	4.41		
	Q	45℃	9.50	11.34	13.39	15.71	18.39	21.49	25.10	29.28	34.11			
	P		3.51	3.58	3.65	3.70	3.75	3.80	3.85	3.91	3.98			
	Q	40℃	9.59	11.52	13.67	16.11	18.91	22.15	25.90	30.24				
	P		3.20	3.27	3.33	3.38	3.43	3.48	3.53	3.60				
	Q	35℃	9.72	11.73	13.97	16.51	19.43	22.79	26.68					
	P		2.93	2.99	3.04	3.09	3.13	3.19	3.25					
	Q	30℃	9.88	11.96	14.28	16.91	19.93	23.41						
	P		2.67	2.73	2.78	2.82	2.87	2.93						
WW108KF-TFD-GN1	Q	85℃					18.74	20.60	22.95	25.86	29.43	33.73	38.86	44.89
	P						9.23	9.34	9.43	9.51	9.57	9.64	9.70	9.77
	Q	80℃				16.95	18.68	20.81	23.43	26.64	30.50	35.12	40.58	46.96
	P					8.29	8.41	8.51	8.59	8.66	8.72	8.78	8.85	8.92
	Q	75℃			15.18	16.81	18.77	21.15	24.04	27.52	31.68	36.60	42.37	49.08
	P				7.42	7.55	7.66	7.75	7.82	7.88	7.94	8.00	8.07	8.15
	Q	70℃		13.38	14.96	16.80	18.99	21.61	24.75	28.49	32.93	38.14	44.21	51.24
	P			6.62	6.76	6.88	6.97	7.05	7.11	7.17	7.23	7.30	7.37	7.46
	Q	65℃	11.53	13.11	14.88	16.92	19.32	22.17	25.54	29.54	34.24	39.72	46.09	53.41
	P		5.88	6.04	6.16	6.26	6.34	6.41	6.47	6.53	6.59	6.66	6.74	6.84
	Q	60℃	11.24	12.98	14.92	17.15	19.75	22.80	26.41	30.64	35.58	41.33	47.97	55.58
	P		5.37	5.50	5.61	5.70	5.77	5.84	5.89	5.95	6.02	6.09	6.18	6.29
	Q	55℃	11.07	12.96	15.06	17.46	20.24	23.50	27.31	31.77	36.95	42.95	49.85	57.73
	P		4.89	5.01	5.11	5.19	5.25	5.31	5.37	5.43	5.50	5.58	5.68	5.81
	Q	50℃	11.02	13.04	15.28	17.84	20.80	24.24	28.25	32.91	38.32	44.55		
	P		4.47	4.57	4.66	4.73	4.79	4.84	4.90	4.97	5.04	5.13		
	Q	45℃	11.05	13.19	15.57	18.27	21.39	25.00	29.19	34.05	39.66			
	P		4.08	4.17	4.24	4.31	4.37	4.42	4.48	4.55	4.63			
	Q	40℃	11.15	13.40	15.90	18.73	21.99	25.76	30.12	35.17				
	P		3.72	3.80	3.87	3.93	3.99	4.04	4.11	4.18				
	Q	35℃	11.31	13.65	16.25	19.20	22.59	26.51	31.03					
	P		3.40	3.47	3.53	3.59	3.65	3.71	3.78					
	Q	30℃	11.49	13.91	16.61	19.67	23.18	27.22						
	P		3.11	3.17	3.23	3.28	3.34	3.40						

注：冷凝器出口过冷度5. 0K, 过热度5. 0K

Note：Condenser Outlet Subcooling 5.0K,Subheating 5.0K

制热量
Heating Capacity

WW — **R134a**

不带喷气增焓*W/O EVI*

型号Model	项目Item (KW)	Tc\Te	-15℃	-10℃	-5℃	0℃	5℃	10℃	15℃	20℃	25℃	30℃	35℃	40℃
WW125KF-TFD-GN1	Q	85℃					21.07	23.17	25.81	29.08	33.09	37.93	43.70	50.49
	P						10.38	10.51	10.61	10.69	10.77	10.84	10.91	10.98
	Q	80℃				19.07	21.01	23.40	26.35	29.95	34.30	39.50	45.64	52.81
	P					9.32	9.46	9.57	9.66	9.74	9.81	9.88	9.95	10.03
	Q	75℃			17.07	18.90	21.11	23.79	27.03	30.95	35.63	41.16	47.65	55.19
	P				8.35	8.49	8.61	8.71	8.79	8.86	8.93	9.00	9.08	9.17
	Q	70℃		15.05	16.82	18.89	21.35	24.30	27.83	32.04	37.03	42.89	49.72	57.62
	P			7.45	7.61	7.73	7.84	7.93	8.00	8.07	8.14	8.21	8.29	8.39
	Q	65℃	12.97	14.75	16.73	19.03	21.73	24.93	28.73	33.22	38.50	44.67	51.83	60.06
	P		6.62	6.79	6.93	7.04	7.13	7.21	7.28	7.35	7.42	7.49	7.58	7.69
	Q	60℃	12.64	14.60	16.78	19.28	22.21	25.64	29.69	34.45	40.02	46.48	53.95	62.50
	P		6.03	6.19	6.31	6.41	6.49	6.56	6.63	6.70	6.77	6.85	6.95	7.08
	Q	55℃	12.45	14.57	16.94	19.63	22.77	26.43	30.71	35.72	41.55	48.30	56.06	64.92
	P		5.50	5.64	5.75	5.83	5.91	5.98	6.04	6.11	6.19	6.28	6.39	6.53
	Q	50℃	12.39	14.66	17.19	20.06	23.39	27.26	31.76	37.01	43.09	50.10		
	P		5.02	5.14	5.24	5.31	5.38	5.45	5.51	5.58	5.67	5.77		
	Q	45℃	12.42	14.83	17.51	20.55	24.05	28.11	32.83	38.29	44.61			
	P		4.58	4.69	4.77	4.84	4.91	4.97	5.04	5.12	5.21			
	Q	40℃	12.54	15.07	17.88	21.07	24.73	28.97	33.87	39.55				
	P		4.19	4.28	4.35	4.42	4.48	4.55	4.62	4.70				
	Q	35℃	12.71	15.35	18.28	21.60	25.41	29.81	34.89					
	P		3.83	3.91	3.98	4.04	4.10	4.17	4.25					
	Q	30℃	12.93	15.65	18.68	22.12	26.07	30.61						
	P		3.50	3.57	3.63	3.69	3.76	3.83						
WW138KF-TFD-GN1	Q	85℃					24.20	26.61	29.64	33.41	38.01	43.57	50.19	57.99
	P						11.93	12.07	12.18	12.28	12.37	12.45	12.53	12.62
	Q	80℃				21.90	24.13	26.88	30.27	34.41	39.41	45.37	52.42	60.66
	P					10.71	10.87	10.99	11.10	11.18	11.27	11.34	11.43	11.52
	Q	75℃			19.61	21.71	24.25	27.32	31.06	35.55	40.92	47.28	54.74	63.40
	P				9.59	9.76	9.89	10.01	10.10	10.18	10.26	10.34	10.43	10.53
	Q	70℃		17.28	19.33	21.70	24.53	27.92	31.97	36.81	42.54	49.27	57.12	66.19
	P			8.56	8.74	8.88	9.00	9.10	9.19	9.27	9.35	9.43	9.52	9.64
	Q	65℃	14.90	16.94	19.22	21.86	24.96	28.64	33.00	38.16	44.23	51.32	59.53	68.99
	P		7.60	7.80	7.96	8.09	8.19	8.28	8.36	8.44	8.52	8.61	8.71	8.84
	Q	60℃	14.52	16.77	19.27	22.15	25.51	29.46	34.11	39.58	45.97	53.39	61.97	71.80
	P		6.93	7.11	7.25	7.36	7.46	7.54	7.61	7.69	7.77	7.87	7.99	8.13
	Q	55℃	14.30	16.74	19.45	22.55	26.15	30.36	35.28	41.04	47.73	55.48	64.39	74.58
	P		6.32	6.48	6.60	6.70	6.79	6.87	6.94	7.02	7.11	7.21	7.34	7.50
	Q	50℃	14.23	16.84	19.74	23.05	26.87	31.31	36.49	42.51	49.50	57.55		
	P		5.77	5.90	6.01	6.10	6.18	6.26	6.33	6.42	6.51	6.63		
	Q	45℃	14.27	17.04	20.11	23.60	27.63	32.29	37.71	43.99	51.24			
	P		5.27	5.39	5.48	5.56	5.64	5.71	5.79	5.88	5.99			
	Q	40℃	14.40	17.31	20.54	24.20	28.41	33.28	38.91	45.43				
	P		4.81	4.91	5.00	5.08	5.15	5.22	5.31	5.40				
	Q	35℃	14.61	17.63	20.99	24.81	29.19	34.24	40.08					
	P		4.39	4.49	4.57	4.64	4.71	4.79	4.88					
	Q	30℃	14.85	17.97	21.46	25.41	29.94	35.16						
	P		4.02	4.10	4.17	4.24	4.32	4.40						

注：冷凝器出口过冷度5. 0K, 过热度5. 0K

Note：Condenser Outlet Subcooling 5.0K,Subheating 5.0K

R134a — **WW**

不带喷气增焓*W/O EVI*

制热量
Heating Capacity

型号Model	项目Item (KW)	Tc\Te	-15℃	-10℃	-5℃	0℃	5℃	10℃	15℃	20℃	25℃	30℃	35℃	40℃
WW154KF-TFD-GN1	Q	85℃					26.51	29.15	32.47	36.59	41.64	47.73	54.98	63.52
	P						13.06	13.22	13.35	13.45	13.55	13.63	13.72	13.82
	Q	80℃				23.99	26.43	29.45	33.16	37.69	43.16	49.70	57.42	66.45
	P					11.73	11.90	12.04	12.15	12.25	12.34	12.43	12.52	12.62
	Q	75℃			21.48	23.78	26.56	29.93	34.02	38.94	44.83	51.79	59.96	69.45
	P				10.51	10.69	10.84	10.96	11.06	11.15	11.24	11.33	11.42	11.53
	Q	70℃		18.93	21.17	23.77	26.87	30.58	35.02	40.32	46.60	53.97	62.56	72.50
	P			9.37	9.57	9.73	9.86	9.97	10.07	10.15	10.24	10.33	10.43	10.56
	Q	65℃	16.32	18.56	21.06	23.94	27.34	31.37	36.15	41.80	48.45	56.21	65.21	75.58
	P		8.33	8.54	8.72	8.86	8.98	9.07	9.16	9.24	9.33	9.43	9.54	9.68
	Q	60℃	15.90	18.37	21.11	24.26	27.94	32.27	37.36	43.35	50.35	58.49	67.88	78.65
	P		7.59	7.78	7.94	8.06	8.17	8.26	8.34	8.42	8.52	8.62	8.75	8.90
	Q	55℃	15.67	18.34	21.31	24.71	28.65	33.25	38.65	44.95	52.29	60.77	70.53	81.69
	P		6.93	7.09	7.23	7.34	7.44	7.52	7.60	7.69	7.78	7.90	8.04	8.22
	Q	50℃	15.59	18.45	21.62	25.25	29.43	34.30	39.97	46.57	54.22	63.04		
	P		6.32	6.47	6.59	6.69	6.77	6.85	6.94	7.03	7.13	7.26		
	Q	45℃	15.63	18.66	22.03	25.85	30.26	35.37	41.30	48.18	56.13			
	P		5.77	5.90	6.01	6.10	6.18	6.26	6.34	6.44	6.56			
	Q	40℃	15.78	18.96	22.49	26.51	31.12	36.45	42.62	49.76				
	P		5.27	5.38	5.48	5.56	5.64	5.72	5.81	5.92				
	Q	35℃	16.00	19.31	23.00	27.18	31.97	37.51	43.90					
	P		4.81	4.92	5.00	5.08	5.16	5.24	5.34					
	Q	30℃	16.27	19.69	23.51	27.83	32.80	38.52						
	P		4.40	4.49	4.57	4.65	4.73	4.82						
WW170KF-TFD-GN1	Q	85℃					31.57	34.72	38.67	43.58	49.59	56.84	65.48	75.65
	P						15.56	15.74	15.89	16.02	16.13	16.24	16.34	16.46
	Q	80℃				28.57	31.48	35.07	39.49	44.89	51.41	59.19	68.38	79.13
	P					13.97	14.17	14.34	14.47	14.59	14.70	14.80	14.91	15.03
	Q	75℃			25.58	28.32	31.63	35.64	40.51	46.38	53.38	61.68	71.41	82.71
	P				12.51	12.73	12.91	13.05	13.17	13.28	13.38	13.49	13.60	13.74
	Q	70℃		22.55	25.21	28.31	32.00	36.42	41.71	48.02	55.49	64.27	74.51	86.34
	P			11.16	11.40	11.59	11.75	11.88	11.99	12.09	12.19	12.30	12.42	12.57
	Q	65℃	19.44	22.10	25.08	28.51	32.56	37.36	43.05	49.78	57.70	66.94	77.66	90.00
	P		9.91	10.17	10.38	10.55	10.69	10.81	10.91	11.01	11.11	11.23	11.36	11.53
	Q	60℃	18.94	21.87	25.14	28.90	33.28	38.43	44.50	51.63	59.97	69.65	80.84	93.66
	P		9.04	9.27	9.45	9.60	9.73	9.83	9.93	10.03	10.14	10.27	10.42	10.60
	Q	55℃	18.66	21.84	25.38	29.42	34.11	39.60	46.02	53.53	62.27	72.37	84.00	97.28
	P		8.25	8.45	8.61	8.74	8.86	8.96	9.05	9.15	9.27	9.41	9.58	9.79
	Q	50℃	18.56	21.97	25.75	30.06	35.05	40.84	47.60	55.46	64.57	75.07		
	P		7.53	7.70	7.84	7.96	8.07	8.16	8.26	8.37	8.50	8.65		
	Q	45℃	18.62	22.22	26.23	30.79	36.04	42.12	49.19	57.38	66.84			
	P		6.87	7.02	7.15	7.26	7.36	7.45	7.55	7.67	7.81			
	Q	40℃	18.79	22.58	26.79	31.57	37.06	43.41	50.76	59.26				
	P		6.27	6.41	6.52	6.62	6.72	6.81	6.92	7.05				
	Q	35℃	19.05	23.00	27.39	32.36	38.08	44.67	52.28					
	P		5.73	5.85	5.96	6.05	6.14	6.24	6.36					
	Q	30℃	19.37	23.45	27.99	33.15	39.06	45.87						
	P		5.24	5.35	5.44	5.53	5.63	5.74						

注：冷凝器出口过冷度5. 0K, 过热度5. 0K

Note：Condenser Outlet Subcooling 5.0K,Subheating 5.0K

制热量 Heating Capacity

WW R134a

不带喷气增焓 *W/O EVI*

制热量 HEATING CAPACITY

型号Model	项目Item (KW)	Tc\Te	-15℃	-10℃	-5℃	0℃	5℃	10℃	15℃	20℃	25℃	30℃	35℃	40℃
WW250KF-TWD-GN1	Q	85℃					41.23	45.33	50.49	56.90	64.75	74.22	85.50	98.78
	P						20.31	20.56	20.75	20.92	21.07	21.20	21.34	21.49
	Q	80℃				37.31	41.10	45.79	51.56	58.61	67.12	77.29	89.29	103.33
	P					18.25	18.51	18.72	18.90	19.05	19.19	19.32	19.46	19.62
	Q	75℃			33.40	36.98	41.30	46.54	52.90	60.56	69.71	80.54	93.24	108.00
	P				16.34	16.62	16.85	17.04	17.20	17.34	17.48	17.61	17.76	17.94
	Q	70℃		29.44	32.92	36.97	41.78	47.55	54.46	62.70	72.46	83.93	97.29	112.74
	P			14.57	14.88	15.13	15.34	15.51	15.65	15.79	15.92	16.06	16.22	16.42
	Q	65℃	25.38	28.85	32.74	37.23	42.51	48.78	56.21	65.00	75.34	87.41	101.41	117.52
	P		12.95	13.28	13.55	13.78	13.96	14.11	14.25	14.38	14.51	14.66	14.84	15.05
	Q	60℃	24.73	28.56	32.83	37.73	43.45	50.18	58.10	67.41	78.30	90.95	105.55	122.30
	P		11.81	12.10	12.34	12.54	12.70	12.84	12.97	13.10	13.24	13.40	13.60	13.84
	Q	55℃	24.37	28.52	33.14	38.42	44.55	51.71	60.10	69.90	81.30	94.50	109.68	127.03
	P		10.77	11.03	11.24	11.42	11.56	11.69	11.82	11.95	12.10	12.28	12.51	12.78
	Q	50℃	24.24	28.68	33.63	39.26	45.76	53.33	62.15	72.42	84.31	98.03		
	P		9.83	10.06	10.24	10.40	10.53	10.66	10.79	10.93	11.09	11.29		
	Q	45℃	24.31	29.02	34.25	40.20	47.06	55.00	64.23	74.92	87.28			
	P		8.97	9.17	9.34	9.48	9.61	9.73	9.86	10.01	10.20			
	Q	40℃	24.54	29.48	34.98	41.22	48.39	56.68	66.28	77.38				
	P		8.19	8.37	8.52	8.65	8.77	8.90	9.04	9.21				
	Q	35℃	24.88	30.03	35.76	42.26	49.72	58.33	68.27					
	P		7.49	7.64	7.78	7.90	8.02	8.15	8.31					
	Q	30℃	25.29	30.62	36.55	43.28	51.00	59.90						
	P		6.84	6.98	7.11	7.23	7.35	7.49						
WW300KF-TWD-GN1	Q	85℃					50.74	55.79	62.15	70.03	79.69	91.34	105.23	121.58
	P						25.00	25.30	25.54	25.75	25.93	26.09	26.26	26.45
	Q	80℃				45.92	50.58	56.35	63.46	72.14	82.61	95.12	109.90	127.17
	P					22.46	22.78	23.04	23.26	23.45	23.62	23.78	23.96	24.15
	Q	75℃			41.10	45.51	50.83	57.28	65.11	74.53	85.79	99.12	114.75	132.92
	P				20.11	20.46	20.74	20.98	21.17	21.35	21.51	21.68	21.86	22.08
	Q	70℃		36.23	40.51	45.50	51.43	58.53	67.03	77.17	89.18	103.29	119.74	138.76
	P			17.94	18.32	18.63	18.88	19.09	19.27	19.43	19.59	19.77	19.96	20.20
	Q	65℃	31.24	35.51	40.30	45.82	52.33	60.03	69.18	80.00	92.72	107.58	124.81	144.64
	P		15.93	16.35	16.68	16.95	17.18	17.37	17.53	17.69	17.86	18.04	18.26	18.53
	Q	60℃	30.44	35.15	40.41	46.44	53.48	61.76	71.51	82.97	96.37	111.94	129.91	150.52
	P		14.53	14.90	15.19	15.43	15.63	15.81	15.96	16.12	16.30	16.50	16.74	17.04
	Q	55℃	29.99	35.10	40.79	47.28	54.82	63.64	73.97	86.03	100.07	116.31	134.99	156.34
	P		13.25	13.58	13.84	14.05	14.23	14.39	14.55	14.71	14.90	15.12	15.39	15.73
	Q	50℃	29.83	35.30	41.39	48.32	56.32	65.64	76.50	89.13	103.77	120.65		
	P		12.09	12.38	12.61	12.80	12.96	13.12	13.28	13.45	13.65	13.90		
	Q	45℃	29.92	35.72	42.16	49.48	57.92	67.69	79.05	92.21	107.42			
	P		11.04	11.29	11.49	11.67	11.82	11.97	12.14	12.32	12.55			
	Q	40℃	30.20	36.28	43.05	50.73	59.56	69.76	81.58	95.23				
	P		10.08	10.30	10.49	10.64	10.80	10.95	11.12	11.33				
	Q	35℃	30.62	36.96	44.01	52.01	61.19	71.79	84.02					
	P		9.21	9.41	9.57	9.72	9.87	10.04	10.22					
	Q	30℃	31.13	37.68	44.99	53.27	62.77	73.72						
	P		8.42	8.59	8.75	8.89	9.05	9.22						

注：冷凝器出口过冷度5. 0K, 过热度5. 0K

Note：Condenser Outlet Subcooling 5.0K,Subheating 5.0K

R134a WW

带喷气增焓 *EVI*

制热量 Heating Capacity

制热量 HEATING CAPACITY

型号Model	项目Item (KW)	Tc\Te	-20℃	-15℃	-10℃	-5℃	0℃	5℃	10℃	15℃	20℃	25℃	30℃	35℃	40℃
WW24KF-TFD-GV1	Q	85℃						5.68	6.30	7.00	7.77	8.64	9.59	10.65	11.81
	P							2.31	2.36	2.42	2.49	2.56	2.65	2.73	2.82
	Q	80℃	3.26	3.61	4.01	4.46	4.98	5.56	6.21	6.93	7.74	8.63	9.62	10.71	11.91
	P		1.95	1.94	1.94	1.96	1.99	2.04	2.10	2.16	2.23	2.30	2.38	2.46	2.54
	Q	75℃	3.04	3.42	3.85	4.32	4.86	5.47	6.15	6.90	7.74	8.66	9.69	10.81	12.04
	P		1.67	1.67	1.69	1.72	1.76	1.82	1.88	1.94	2.01	2.08	2.15	2.22	2.29
	Q	70℃	2.88	3.27	3.72	4.22	4.79	5.42	6.12	6.90	7.77	8.72	9.77	10.92	12.18
	P		1.43	1.45	1.48	1.53	1.58	1.63	1.69	1.76	1.82	1.89	1.95	2.01	2.06
	Q	65℃	2.75	3.17	3.63	4.16	4.74	5.39	6.12	6.93	7.82	8.80	9.88	11.06	12.35
	P		1.25	1.28	1.32	1.37	1.42	1.48	1.54	1.60	1.66	1.72	1.77	1.81	1.85
	Q	60℃	2.66	3.09	3.57	4.12	4.72	5.39	6.14	6.97	7.88	8.89	9.99	11.20	12.52
	P		1.10	1.14	1.19	1.24	1.30	1.36	1.42	1.47	1.52	1.57	1.61	1.63	1.65
	Q	55℃	2.59	3.04	3.54	4.10	4.72	5.41	6.18	7.03	7.96	8.99	10.12	11.35	12.69
	P		0.99	1.04	1.09	1.14	1.20	1.25	1.31	1.35	1.39	1.43	1.45	1.46	1.45
	Q	50℃	2.54	3.00	3.52	4.09	4.73	5.44	6.22	7.09	8.04	9.09	10.24		
	P		0.90	0.95	1.01	1.06	1.11	1.16	1.21	1.24	1.27	1.29	1.29		
	Q	45℃	2.51	2.98	3.51	4.09	4.74	5.47	6.27	7.15	8.12	9.19			
	P		0.83	0.88	0.94	0.99	1.04	1.08	1.11	1.14	1.15	1.15			
	Q	40℃	2.49	2.97	3.50	4.10	4.76	5.49	6.31	7.20	8.19				
	P		0.77	0.82	0.87	0.92	0.96	0.99	1.01	1.02	1.02				
	Q	35℃	2.47	2.95	3.49	4.10	4.77	5.51	6.34	7.25					
	P		0.71	0.76	0.81	0.85	0.88	0.90	0.91	0.90					
	Q	30℃	2.44	2.93	3.48	4.09	4.77	5.52	6.35						
	P		0.65	0.70	0.74	0.77	0.79	0.79	0.78						
WW34KF-TFD-GV1	Q	85℃						8.29	9.20	10.22	11.35	12.62	14.01	15.56	17.25
	P							3.36	3.43	3.51	3.61	3.72	3.84	3.96	4.09
	Q	80℃	4.74	5.26	5.85	6.51	7.26	8.11	9.06	10.12	11.30	12.62	14.06	15.66	17.41
	P		2.83	2.81	2.82	2.85	2.89	2.96	3.04	3.13	3.23	3.34	3.45	3.57	3.68
	Q	75℃	4.44	4.99	5.61	6.31	7.10	7.99	8.98	10.08	11.31	12.66	14.16	15.80	17.60
	P		2.42	2.42	2.45	2.50	2.56	2.63	2.72	2.82	2.92	3.02	3.12	3.22	3.32
	Q	70℃	4.20	4.78	5.43	6.17	6.99	7.91	8.94	10.08	11.35	12.75	14.29	15.97	17.82
	P		2.08	2.11	2.15	2.21	2.29	2.37	2.46	2.55	2.64	2.74	2.83	2.91	2.99
	Q	65℃	4.01	4.62	5.30	6.07	6.93	7.88	8.94	10.12	11.43	12.86	14.44	16.17	18.06
	P		1.81	1.86	1.92	1.99	2.06	2.15	2.24	2.33	2.41	2.49	2.57	2.63	2.69
	Q	60℃	3.88	4.51	5.22	6.01	6.90	7.88	8.98	10.19	11.53	13.00	14.62	16.38	18.31
	P		1.60	1.66	1.73	1.80	1.89	1.97	2.05	2.13	2.21	2.27	2.33	2.37	2.40
	Q	55℃	3.78	4.43	5.17	5.98	6.89	7.91	9.03	10.27	11.64	13.15	14.80	16.60	18.56
	P		1.43	1.50	1.58	1.66	1.74	1.82	1.89	1.96	2.02	2.07	2.10	2.12	2.11
	Q	50℃	3.71	4.39	5.14	5.98	6.91	7.95	9.09	10.36	11.76	13.30	14.98		
	P		1.30	1.38	1.46	1.54	1.62	1.69	1.75	1.80	1.84	1.87	1.87		
	Q	45℃	3.67	4.36	5.12	5.98	6.93	7.99	9.16	10.46	11.88	13.44			
	P		1.20	1.28	1.36	1.44	1.50	1.57	1.61	1.65	1.67	1.66			
	Q	40℃	3.63	4.33	5.12	5.99	6.96	8.03	9.22	10.54	11.98				
	P		1.11	1.19	1.27	1.34	1.40	1.44	1.47	1.48	1.47				
	Q	35℃	3.60	4.31	5.11	5.99	6.97	8.06	9.27	10.60					
	P		1.03	1.11	1.18	1.24	1.28	1.31	1.31	1.30					
	Q	30℃	3.57	4.28	5.08	5.98	6.97	8.07	9.29						
	P		0.95	1.02	1.08	1.12	1.14	1.15	1.13						

注：冷凝器出口过冷度5. 0K, 过热度5. 0K

Note：Condenser Outlet Subcooling 5.0K,Subheating 5.0K

制热量
Heating Capacity

WW — **R134a**

带喷气增焓 *EVI*

制热量 HEATING CAPACITY

型号Model	项目Item (KW)	Tc\Te	-20℃	-15℃	-10℃	-5℃	0℃	5℃	10℃	15℃	20℃	25℃	30℃	35℃	40℃
WW48KF-TFD-GV1	Q	85℃						11.23	12.49	13.89	15.46	17.21	19.15	21.28	23.63
	P							4.36	4.45	4.56	4.69	4.83	4.99	5.14	5.31
	Q	80℃	6.34	7.06	7.88	8.80	9.84	11.01	12.33	13.80	15.43	17.25	19.25	21.46	23.88
	P		3.67	3.65	3.66	3.70	3.76	3.84	3.95	4.07	4.20	4.34	4.49	4.63	4.78
	Q	75℃	5.95	6.72	7.58	8.55	9.64	10.87	12.24	13.77	15.47	17.34	19.41	21.69	24.18
	P		3.14	3.15	3.18	3.24	3.32	3.42	3.53	3.66	3.79	3.92	4.05	4.18	4.31
	Q	70℃	5.65	6.45	7.36	8.38	9.52	10.79	12.22	13.80	15.55	17.49	19.62	21.96	24.52
	P		2.70	2.74	2.80	2.87	2.97	3.07	3.19	3.31	3.43	3.56	3.67	3.78	3.88
	Q	65℃	5.41	6.26	7.20	8.26	9.45	10.77	12.24	13.87	15.68	17.67	19.86	22.26	24.88
	P		2.35	2.41	2.49	2.58	2.68	2.79	2.91	3.02	3.13	3.24	3.34	3.42	3.49
	Q	60℃	5.25	6.12	7.10	8.20	9.42	10.79	12.30	13.98	15.84	17.88	20.13	22.58	25.26
	P		2.08	2.15	2.24	2.34	2.45	2.56	2.67	2.77	2.87	2.95	3.03	3.08	3.11
	Q	55℃	5.13	6.03	7.04	8.17	9.43	10.84	12.39	14.11	16.01	18.11	20.40	22.91	25.64
	P		1.86	1.95	2.05	2.15	2.26	2.36	2.46	2.55	2.63	2.69	2.73	2.75	2.74
	Q	50℃	5.05	5.98	7.01	8.17	9.47	10.90	12.50	14.26	16.20	18.33	20.67		
	P		1.69	1.79	1.90	2.00	2.10	2.19	2.27	2.34	2.40	2.43	2.43		
	Q	45℃	4.99	5.94	7.01	8.19	9.51	10.98	12.60	14.40	16.38	18.55			
	P		1.56	1.66	1.77	1.86	1.95	2.03	2.10	2.14	2.16	2.16			
	Q	40℃	4.95	5.92	7.00	8.21	9.55	11.05	12.70	14.53	16.54				
	P		1.44	1.55	1.65	1.74	1.81	1.87	1.91	1.93	1.92				
	Q	35℃	4.92	5.90	7.00	8.22	9.59	11.10	12.78	14.63					
	P		1.34	1.44	1.53	1.60	1.66	1.70	1.71	1.69					
	Q	30℃	4.88	5.87	6.98	8.21	9.59	11.13	12.83						
	P		1.23	1.32	1.40	1.45	1.49	1.49	1.47						
WW61KF-TFD-GV1	Q	85℃						14.39	15.99	17.78	19.79	22.02	24.49	27.22	30.22
	P							5.63	5.74	5.89	6.06	6.24	6.44	6.64	6.85
	Q	80℃	8.14	9.06	10.10	11.28	12.61	14.10	15.78	17.65	19.74	22.06	24.62	27.44	30.53
	P		4.74	4.71	4.72	4.77	4.85	4.96	5.10	5.25	5.42	5.60	5.79	5.98	6.17
	Q	75℃	7.63	8.61	9.71	10.95	12.35	13.91	15.66	17.61	19.78	22.17	24.82	27.72	30.90
	P		4.05	4.06	4.11	4.18	4.29	4.42	4.56	4.72	4.89	5.06	5.23	5.40	5.56
	Q	70℃	7.24	8.27	9.43	10.72	12.18	13.81	15.63	17.64	19.88	22.35	25.07	28.06	31.32
	P		3.49	3.53	3.61	3.71	3.83	3.97	4.12	4.27	4.43	4.59	4.74	4.88	5.01
	Q	65℃	6.94	8.02	9.22	10.58	12.09	13.77	15.65	17.74	20.04	22.58	25.38	28.44	31.78
	P		3.04	3.11	3.21	3.33	3.46	3.60	3.75	3.90	4.04	4.18	4.31	4.41	4.50
	Q	60℃	6.72	7.84	9.09	10.49	12.05	13.79	15.73	17.87	20.24	22.85	25.71	28.84	32.25
	P		2.68	2.78	2.90	3.02	3.16	3.30	3.44	3.58	3.70	3.81	3.90	3.97	4.02
	Q	55℃	6.56	7.72	9.01	10.45	12.06	13.85	15.84	18.04	20.46	23.13	26.05	29.25	32.73
	P		2.40	2.52	2.65	2.78	2.92	3.05	3.18	3.29	3.39	3.47	3.52	3.55	3.54
	Q	50℃	6.46	7.65	8.97	10.45	12.10	13.93	15.97	18.21	20.69	23.41	26.39		
	P		2.18	2.31	2.45	2.58	2.71	2.83	2.94	3.03	3.09	3.13	3.14		
	Q	45℃	6.39	7.60	8.96	10.47	12.16	14.03	16.10	18.39	20.91	23.69			
	P		2.01	2.15	2.28	2.41	2.52	2.62	2.71	2.76	2.79	2.79			
	Q	40℃	6.34	7.57	8.96	10.49	12.21	14.11	16.22	18.55	21.12				
	P		1.86	2.00	2.13	2.24	2.34	2.42	2.47	2.49	2.47				
	Q	35℃	6.29	7.55	8.95	10.51	12.25	14.18	16.32	18.68					
	P		1.73	1.86	1.97	2.07	2.14	2.19	2.20	2.18					
	Q	30℃	6.24	7.50	8.92	10.49	12.25	14.21	16.38						
	P		1.59	1.71	1.80	1.88	1.92	1.93	1.90						

注：冷凝器出口过冷度5. 0K, 过热度5. 0K

Note：Condenser Outlet Subcooling 5.0K,Subheating 5.0K

R134a — **WW**

带喷气增焓 *EVI*

制热量
Heating Capacity

制热量 HEATING CAPACITY

型号Model	项目Item (KW)	Tc\Te	-20℃	-15℃	-10℃	-5℃	0℃	5℃	10℃	15℃	20℃	25℃	30℃	35℃	40℃
WW72KF-TFD-GV1	Q	85℃						16.85	18.74	20.85	23.21	25.83	28.74	31.95	35.48
	P							6.54	6.67	6.84	7.04	7.25	7.48	7.72	7.96
	Q	80℃	9.51	10.59	11.82	13.20	14.77	16.53	18.50	20.71	23.16	25.89	28.90	32.21	35.85
	P		5.51	5.47	5.49	5.54	5.64	5.77	5.92	6.10	6.30	6.51	6.73	6.95	7.17
	Q	75℃	8.93	10.08	11.37	12.83	14.47	16.31	18.37	20.67	23.21	26.03	29.14	32.56	36.30
	P		4.71	4.72	4.77	4.86	4.98	5.13	5.30	5.48	5.68	5.88	6.08	6.28	6.46
	Q	70℃	8.47	9.68	11.04	12.57	14.28	16.20	18.34	20.71	23.34	26.25	29.45	32.97	36.81
	P		4.05	4.11	4.19	4.31	4.45	4.61	4.78	4.97	5.15	5.33	5.51	5.68	5.82
	Q	65℃	8.13	9.39	10.81	12.40	14.18	16.16	18.37	20.82	23.54	26.53	29.82	33.42	37.36
	P		3.53	3.62	3.73	3.87	4.02	4.19	4.36	4.53	4.70	4.86	5.00	5.13	5.23
	Q	60℃	7.87	9.19	10.66	12.31	14.14	16.19	18.47	20.99	23.77	26.84	30.21	33.90	37.92
	P		3.11	3.23	3.36	3.51	3.67	3.84	4.00	4.16	4.30	4.43	4.54	4.62	4.67
	Q	55℃	7.69	9.05	10.57	12.27	14.16	16.26	18.60	21.19	24.04	27.18	30.62	34.39	38.49
	P		2.79	2.93	3.08	3.23	3.39	3.54	3.69	3.82	3.94	4.03	4.09	4.12	4.11
	Q	50℃	7.57	8.97	10.53	12.27	14.21	16.37	18.76	21.40	24.32	27.52	31.03		
	P		2.54	2.69	2.84	3.00	3.15	3.29	3.41	3.52	3.59	3.64	3.65		
	Q	45℃	7.49	8.92	10.52	12.29	14.28	16.48	18.92	21.61	24.58	27.85			
	P		2.34	2.49	2.65	2.80	2.93	3.05	3.14	3.21	3.24	3.24			
	Q	40℃	7.43	8.89	10.51	12.32	14.34	16.58	19.07	21.81	24.83				
	P		2.17	2.32	2.47	2.61	2.72	2.81	2.87	2.89	2.87				
	Q	35℃	7.38	8.86	10.50	12.34	14.39	16.66	19.18	21.97					
	P		2.01	2.16	2.29	2.41	2.49	2.54	2.56	2.53					
	Q	30℃	7.32	8.81	10.47	12.33	14.40	16.70	19.25						
	P		1.84	1.98	2.10	2.18	2.23	2.24	2.21						
WW79KF-TFD-GV1	Q	85℃						17.96	19.97	22.22	24.74	27.54	30.65	34.07	37.84
	P							6.93	7.08	7.26	7.46	7.69	7.93	8.19	8.44
	Q	80℃	10.12	11.28	12.59	14.06	15.73	17.61	19.72	22.08	24.70	27.61	30.82	34.36	38.25
	P		5.84	5.81	5.82	5.88	5.98	6.12	6.28	6.47	6.68	6.91	7.14	7.37	7.60
	Q	75℃	9.50	10.73	12.11	13.67	15.43	17.39	19.59	22.04	24.76	27.77	31.09	34.74	38.74
	P		4.99	5.01	5.06	5.16	5.29	5.44	5.62	5.82	6.02	6.24	6.45	6.66	6.85
	Q	70℃	9.02	10.31	11.77	13.40	15.23	17.27	19.55	22.09	24.90	28.01	31.43	35.18	39.28
	P		4.30	4.36	4.45	4.57	4.72	4.89	5.08	5.27	5.46	5.66	5.85	6.02	6.18
	Q	65℃	8.65	10.01	11.52	13.22	15.12	17.24	19.60	22.21	25.11	28.30	31.82	35.66	39.87
	P		3.74	3.84	3.96	4.10	4.27	4.44	4.62	4.81	4.98	5.15	5.31	5.44	5.55
	Q	60℃	8.39	9.79	11.36	13.12	15.08	17.27	19.70	22.39	25.37	28.64	32.24	36.18	40.48
	P		3.30	3.43	3.57	3.73	3.90	4.07	4.24	4.41	4.56	4.70	4.81	4.90	4.95
	Q	55℃	8.20	9.65	11.27	13.08	15.10	17.35	19.84	22.61	25.65	29.01	32.68	36.71	41.09
	P		2.96	3.10	3.26	3.43	3.60	3.76	3.92	4.06	4.18	4.28	4.34	4.37	4.36
	Q	50℃	8.07	9.56	11.23	13.09	15.16	17.46	20.01	22.84	25.95	29.37	33.13		
	P		2.69	2.85	3.02	3.18	3.34	3.49	3.62	3.73	3.81	3.86	3.87		
	Q	45℃	7.99	9.51	11.21	13.11	15.23	17.58	20.19	23.07	26.24	29.73			
	P		2.48	2.64	2.81	2.97	3.11	3.23	3.33	3.41	3.44	3.44			
	Q	40℃	7.93	9.48	11.21	13.15	15.30	17.69	20.35	23.28	26.50				
	P		2.30	2.46	2.62	2.76	2.88	2.98	3.04	3.07	3.05				
	Q	35℃	7.87	9.44	11.20	13.17	15.35	17.78	20.47	23.45					
	P		2.13	2.29	2.43	2.55	2.64	2.70	2.72	2.69					
	Q	30℃	7.80	9.39	11.17	13.16	15.37	17.83	20.55						
	P		1.96	2.10	2.22	2.31	2.36	2.38	2.34						

注：冷凝器出口过冷度5. 0K, 过热度5. 0K

Note：Condenser Outlet Subcooling 5.0K,Subheating 5.0K

制热量
Heating Capacity

WW — **R134a**

带喷气增焓 *EVI*

型号Model	项目Item (KW)	Tc\Te	-20℃	-15℃	-10℃	-5℃	0℃	5℃	10℃	15℃	20℃	25℃	30℃	35℃	40℃
WW94KF-TFD-GV1	Q	85℃						22.16	24.62	27.39	30.48	33.91	37.72	41.92	46.54
	P							8.66	8.84	9.07	9.32	9.61	9.91	10.22	10.55
	Q	80℃	12.53	13.95	15.55	17.37	19.41	21.72	24.30	27.19	30.40	33.97	37.91	42.26	47.02
	P		7.30	7.25	7.27	7.34	7.47	7.64	7.85	8.09	8.35	8.63	8.92	9.21	9.50
	Q	75℃	11.76	13.26	14.96	16.87	19.02	21.43	24.12	27.13	30.46	34.15	38.22	42.70	47.59
	P		6.24	6.25	6.32	6.44	6.60	6.80	7.02	7.27	7.52	7.79	8.06	8.31	8.56
	Q	70℃	11.15	12.74	14.52	16.52	18.76	21.27	24.06	27.18	30.62	34.43	38.62	43.22	48.25
	P		5.37	5.44	5.56	5.71	5.90	6.11	6.34	6.58	6.83	7.07	7.30	7.52	7.71
	Q	65℃	10.69	12.35	14.21	16.29	18.62	21.21	24.11	27.32	30.87	34.78	39.09	43.80	48.95
	P		4.68	4.79	4.94	5.12	5.33	5.55	5.77	6.00	6.23	6.44	6.63	6.80	6.93
	Q	60℃	10.35	12.07	14.00	16.16	18.56	21.24	24.22	27.52	31.17	35.19	39.59	44.42	49.68
	P		4.13	4.28	4.46	4.66	4.87	5.08	5.30	5.51	5.70	5.87	6.01	6.12	6.18
	Q	55℃	10.11	11.89	13.88	16.10	18.58	21.33	24.39	27.78	31.51	35.62	40.12	45.05	50.42
	P		3.70	3.88	4.07	4.28	4.49	4.70	4.89	5.07	5.22	5.34	5.42	5.46	5.45
	Q	50℃	9.95	11.78	13.82	16.10	18.64	21.46	24.59	28.05	31.87	36.06	40.65		
	P		3.36	3.56	3.77	3.97	4.17	4.36	4.52	4.66	4.76	4.82	4.84		
	Q	45℃	9.84	11.71	13.80	16.13	18.72	21.60	24.80	28.33	32.21	36.48			
	P		3.10	3.30	3.51	3.70	3.88	4.04	4.17	4.25	4.30	4.29			
	Q	40℃	9.76	11.67	13.79	16.16	18.80	21.74	24.99	28.57	32.53				
	P		2.87	3.08	3.28	3.45	3.60	3.72	3.80	3.83	3.81				
	Q	35℃	9.69	11.62	13.78	16.18	18.86	21.84	25.14	28.78					
	P		2.66	2.86	3.04	3.19	3.30	3.37	3.39	3.36					
	Q	30℃	9.60	11.55	13.73	16.16	18.87	21.89	25.22						
	P		2.44	2.63	2.78	2.89	2.95	2.97	2.92						
WW108KF-TFD-GV1	Q	85℃						25.84	29.19	32.88	36.94	41.40	46.28	51.61	57.42
	P							10.38	11.11	11.89	12.71	13.55	14.42	15.31	16.20
	Q	80℃	12.20	14.35	16.71	19.31	22.18	25.34	28.82	32.65	36.86	41.47	46.51	52.00	57.98
	P		6.21	6.68	7.22	7.83	8.50	9.22	9.98	10.78	11.60	12.44	13.29	14.15	15.00
	Q	75℃	11.32	13.57	16.04	18.75	21.73	25.02	28.63	32.59	36.93	41.68	46.87	52.51	58.65
	P		5.00	5.54	6.15	6.81	7.51	8.26	9.04	9.84	10.66	11.49	12.31	13.13	13.94
	Q	70℃	10.63	12.97	15.54	18.35	21.44	24.84	28.56	32.65	37.12	42.01	47.33	53.12	59.40
	P		4.01	4.62	5.27	5.98	6.71	7.48	8.26	9.06	9.87	10.67	11.46	12.23	12.98
	Q	65℃	10.11	12.53	15.18	18.09	21.28	24.78	28.62	32.82	37.41	42.41	47.87	53.79	60.21
	P		3.22	3.88	4.58	5.31	6.06	6.84	7.62	8.40	9.18	9.95	10.69	11.41	12.09
	Q	60℃	9.72	12.22	14.95	17.94	21.22	24.82	28.75	33.06	37.76	42.88	48.45	54.50	61.05
	P		2.60	3.30	4.02	4.77	5.54	6.31	7.08	7.84	8.58	9.30	9.99	10.64	11.24
	Q	55℃	9.45	12.02	14.82	17.89	21.25	24.93	28.95	33.35	38.15	43.38	49.06	55.23	61.90
	P		2.11	2.84	3.59	4.35	5.11	5.87	6.61	7.34	8.04	8.70	9.32	9.89	10.40
	Q	50℃	9.27	11.89	14.75	17.89	21.32	25.07	29.18	33.67	38.56	43.89	49.67		
	P		1.73	2.48	3.24	4.00	4.75	5.48	6.19	6.88	7.52	8.11	8.65		
	Q	45℃	9.15	11.81	14.73	17.92	21.41	25.24	29.42	33.99	38.96	44.37			
	P		1.42	2.18	2.94	3.69	4.42	5.12	5.79	6.42	6.99	7.51			
	Q	40℃	9.06	11.76	14.72	17.96	21.51	25.39	29.64	34.27	39.32				
	P		1.17	1.93	2.68	3.40	4.10	4.76	5.37	5.93	6.43				
	Q	35℃	8.98	11.71	14.71	17.99	21.58	25.51	29.81	34.51					
	P		0.93	1.68	2.41	3.10	3.76	4.36	4.91	5.39					
	Q	30℃	8.88	11.64	14.66	17.97	21.60	25.57	29.92						
	P		0.68	1.41	2.11	2.76	3.36	3.90	4.37						

注：冷凝器出口过冷度5. 0K, 过热度5. 0K

Note：Condenser Outlet Subcooling 5.0K,Subheating 5.0K

R134a — **WW**

带喷气增焓 *EVI*

制热量
Heating Capacity

型号Model	项目Item (KW)	Tc\Te	-20℃	-15℃	-10℃	-5℃	0℃	5℃	10℃	15℃	20℃	25℃	30℃	35℃	40℃
WW125KF-TFD-GV1	Q	85℃						28.55	31.75	35.32	39.32	43.77	48.69	54.12	60.10
	P							11.07	11.31	11.59	11.92	12.28	12.67	13.07	13.48
	Q	80℃	16.11	17.95	20.02	22.37	25.02	28.00	31.34	35.08	39.24	43.86	48.96	54.58	60.74
	P		9.33	9.27	9.30	9.39	9.55	9.77	10.03	10.34	10.67	11.03	11.40	11.77	12.14
	Q	75℃	15.12	17.07	19.27	21.74	24.52	27.64	31.13	35.01	39.33	44.10	49.37	55.16	61.50
	P		7.97	7.99	8.09	8.24	8.44	8.69	8.98	9.29	9.62	9.96	10.30	10.63	10.95
	Q	70℃	14.35	16.40	18.71	21.30	24.20	27.44	31.06	35.09	39.55	44.48	49.90	55.85	62.36
	P		6.87	6.96	7.11	7.30	7.54	7.81	8.11	8.41	8.73	9.04	9.34	9.61	9.86
	Q	65℃	13.77	15.91	18.32	21.01	24.02	27.38	31.13	35.28	39.88	44.94	50.51	56.62	63.28
	P		5.98	6.13	6.32	6.55	6.81	7.09	7.38	7.67	7.96	8.23	8.48	8.69	8.86
	Q	60℃	13.34	15.57	18.06	20.85	23.96	27.43	31.29	35.56	40.28	45.48	51.18	57.43	64.24
	P		5.28	5.47	5.70	5.95	6.22	6.50	6.78	7.04	7.29	7.50	7.69	7.82	7.91
	Q	55℃	13.03	15.34	17.91	20.78	23.99	27.55	31.51	35.89	40.73	46.05	51.88	58.26	65.21
	P		4.73	4.96	5.21	5.47	5.74	6.00	6.25	6.48	6.67	6.83	6.93	6.98	6.97
	Q	50℃	12.83	15.20	17.84	20.79	24.07	27.73	31.78	36.26	41.19	46.62	52.57		
	P		4.30	4.55	4.82	5.08	5.33	5.57	5.78	5.96	6.09	6.17	6.19		
	Q	45℃	12.69	15.11	17.81	20.83	24.18	27.91	32.05	36.62	41.65	47.18			
	P		3.96	4.22	4.49	4.74	4.97	5.17	5.33	5.44	5.50	5.49			
	Q	40℃	12.59	15.06	17.81	20.88	24.30	28.09	32.30	36.95	42.06				
	P		3.67	3.94	4.19	4.41	4.61	4.76	4.86	4.90	4.87				
	Q	35℃	12.51	15.00	17.79	20.91	24.38	28.23	32.50	37.21					
	P		3.40	3.66	3.89	4.08	4.22	4.31	4.34	4.29					
	Q	30℃	12.40	14.92	17.74	20.89	24.40	28.30	32.62						
	P		3.12	3.36	3.55	3.69	3.78	3.79	3.74						
WW138KF-TFD-GV1	Q	85℃						32.82	36.49	40.61	45.20	50.32	55.98	62.24	69.11
	P							12.70	12.97	13.30	13.67	14.09	14.53	14.99	15.47
	Q	80℃	18.51	20.62	23.01	25.71	28.75	32.18	36.03	40.33	45.12	50.43	56.30	62.76	69.85
	P		10.71	10.64	10.66	10.77	10.96	11.21	11.51	11.86	12.24	12.65	13.07	13.50	13.93
	Q	75℃	17.37	19.62	22.14	24.99	28.19	31.77	35.78	40.26	45.22	50.72	56.78	63.44	70.73
	P		9.15	9.17	9.27	9.45	9.69	9.97	10.30	10.66	11.03	11.42	11.81	12.19	12.56
	Q	70℃	16.49	18.85	21.50	24.48	27.82	31.55	35.72	40.35	45.48	51.15	57.39	64.23	71.72
	P		7.88	7.98	8.15	8.38	8.65	8.96	9.30	9.65	10.01	10.37	10.71	11.03	11.31
	Q	65℃	15.82	18.29	21.05	24.15	27.62	31.49	35.79	40.57	45.86	51.69	58.10	65.12	72.79
	P		6.86	7.03	7.25	7.52	7.81	8.13	8.47	8.80	9.13	9.44	9.72	9.97	10.17
	Q	60℃	15.33	17.89	20.76	23.97	27.55	31.54	35.98	40.89	46.32	52.30	58.87	66.06	73.90
	P		6.05	6.28	6.54	6.83	7.14	7.46	7.77	8.08	8.36	8.61	8.82	8.97	9.07
	Q	55℃	14.98	17.63	20.59	23.90	27.58	31.69	36.24	41.28	46.84	52.96	59.67	67.01	75.01
	P		5.42	5.69	5.98	6.28	6.59	6.89	7.17	7.43	7.66	7.83	7.95	8.01	7.99
	Q	50℃	14.75	17.47	20.51	23.90	27.68	31.88	36.54	41.70	47.38	53.63	60.47		
	P		4.93	5.22	5.52	5.83	6.12	6.39	6.63	6.83	6.98	7.08	7.10		
	Q	45℃	14.59	17.37	20.48	23.95	27.81	32.10	36.86	42.12	47.91	54.27			
	P		4.54	4.84	5.15	5.43	5.70	5.93	6.11	6.24	6.31	6.30			
	Q	40℃	14.48	17.31	20.48	24.01	27.94	32.31	37.15	42.50	48.39				
	P		4.21	4.52	4.80	5.06	5.28	5.46	5.57	5.62	5.58				
	Q	35℃	14.38	17.25	20.46	24.04	28.04	32.47	37.38	42.81					
	P		3.90	4.20	4.46	4.68	4.84	4.94	4.97	4.92					
	Q	30℃	14.26	17.15	20.40	24.02	28.06	32.55	37.52						
	P		3.58	3.85	4.07	4.23	4.33	4.35	4.28						

注：冷凝器出口过冷度5. 0K, 过热度5. 0K

Note：Condenser Outlet Subcooling 5.0K,Subheating 5.0K

制热量 HEATING CAPACITY

制热量
Heating Capacity

WW — **R134a**

带喷气增焓 *EVI*

制热量 HEATING CAPACITY

型号Model	项目Item (KW)	Tc\Te	-20℃	-15℃	-10℃	-5℃	0℃	5℃	10℃	15℃	20℃	25℃	30℃	35℃	40℃
WW154KF-TFD-GV1	Q	85℃						35.91	39.92	44.42	49.44	55.03	61.22	68.05	75.57
	P							13.93	14.22	14.58	14.99	15.45	15.93	16.44	16.96
	Q	80℃	20.26	22.57	25.18	28.13	31.46	35.21	39.41	44.11	49.34	55.15	61.56	68.62	76.37
	P		11.74	11.66	11.69	11.81	12.01	12.29	12.62	13.00	13.42	13.87	14.34	14.81	15.27
	Q	75℃	19.02	21.47	24.23	27.34	30.83	34.75	39.14	44.02	49.45	55.45	62.08	69.36	77.33
	P		10.03	10.06	10.17	10.36	10.62	10.93	11.29	11.68	12.10	12.53	12.95	13.37	13.77
	Q	70℃	18.05	20.63	23.53	26.78	30.43	34.51	39.06	44.12	49.73	55.92	62.74	70.22	78.41
	P		8.64	8.75	8.94	9.19	9.49	9.83	10.19	10.58	10.98	11.37	11.74	12.09	12.41
	Q	65℃	17.31	20.01	23.03	26.42	30.20	34.43	39.14	44.36	50.14	56.51	63.51	71.18	79.57
	P		7.52	7.71	7.95	8.24	8.57	8.92	9.29	9.65	10.01	10.35	10.66	10.93	11.15
	Q	60℃	16.77	19.57	22.71	26.21	30.13	34.49	39.34	44.71	50.64	57.18	64.35	72.20	80.77
	P		6.64	6.88	7.17	7.49	7.83	8.18	8.52	8.86	9.16	9.44	9.67	9.84	9.95
	Q	55℃	16.39	19.28	22.52	26.13	30.16	34.65	39.62	45.13	51.21	57.89	65.23	73.25	81.99
	P		5.95	6.24	6.55	6.89	7.22	7.55	7.86	8.15	8.39	8.59	8.72	8.78	8.76
	Q	50℃	16.13	19.11	22.43	26.14	30.27	34.86	39.95	45.59	51.79	58.62	66.10		
	P		5.41	5.73	6.06	6.39	6.71	7.01	7.27	7.49	7.66	7.76	7.78		
	Q	45℃	15.96	19.00	22.40	26.19	30.41	35.10	40.30	46.04	52.37	59.32			
	P		4.98	5.31	5.64	5.96	6.25	6.50	6.70	6.84	6.91	6.91			
	Q	40℃	15.84	18.93	22.39	26.25	30.55	35.32	40.61	46.45	52.89				
	P		4.62	4.95	5.27	5.55	5.79	5.98	6.11	6.16	6.12				
	Q	35℃	15.73	18.86	22.37	26.29	30.65	35.49	40.86	46.79					
	P		4.28	4.60	4.89	5.13	5.31	5.42	5.45	5.40					
	Q	30℃	15.59	18.76	22.30	26.26	30.67	35.58	41.01						
	P		3.93	4.22	4.46	4.64	4.75	4.77	4.70						
WW170KF-TFD-GV1	Q	85℃						42.42	47.18	52.52	58.48	65.11	72.45	80.55	89.47
	P							16.32	16.67	17.09	17.57	18.10	18.67	19.27	19.87
	Q	80℃	23.88	26.62	29.72	33.22	37.17	41.62	46.60	52.18	58.38	65.27	72.87	81.25	90.45
	P		13.76	13.67	13.70	13.84	14.08	14.40	14.79	15.24	15.73	16.26	16.80	17.35	17.90
	Q	75℃	22.43	25.34	28.61	32.30	36.45	41.10	46.30	52.09	58.53	65.65	73.51	82.15	91.61
	P		11.75	11.78	11.92	12.14	12.45	12.81	13.23	13.69	14.18	14.68	15.18	15.67	16.13
	Q	70℃	21.30	24.36	27.80	31.66	35.98	40.82	46.22	52.22	58.88	66.23	74.32	83.20	92.91
	P		10.12	10.25	10.47	10.76	11.12	11.51	11.95	12.40	12.86	13.32	13.76	14.17	14.54
	Q	65℃	20.44	23.64	27.22	31.24	35.73	40.75	46.33	52.52	59.38	66.94	75.25	84.36	94.31
	P		8.81	9.03	9.32	9.66	10.04	10.45	10.88	11.31	11.73	12.13	12.49	12.81	13.06
	Q	60℃	19.81	23.13	26.85	31.01	35.65	40.83	46.58	52.95	59.99	67.75	76.26	85.59	95.76
	P		7.78	8.07	8.40	8.78	9.17	9.58	9.99	10.38	10.74	11.06	11.33	11.53	11.65
	Q	55℃	19.37	22.80	26.64	30.92	35.70	41.02	46.93	53.46	60.68	68.61	77.32	86.84	97.22
	P		6.97	7.31	7.68	8.07	8.46	8.85	9.22	9.55	9.84	10.07	10.22	10.29	10.27
	Q	50℃	19.07	22.60	26.54	30.94	35.84	41.29	47.33	54.01	61.38	69.49	78.37		
	P		6.34	6.71	7.10	7.49	7.86	8.21	8.52	8.78	8.97	9.09	9.12		
	Q	45℃	18.87	22.48	26.51	31.00	36.01	41.58	47.74	54.56	62.07	70.33			
	P		5.83	6.23	6.61	6.98	7.32	7.61	7.85	8.02	8.10	8.09			
	Q	40℃	18.73	22.41	26.51	31.09	36.18	41.85	48.13	55.06	62.70				
	P		5.41	5.80	6.17	6.51	6.79	7.01	7.16	7.22	7.17				
	Q	35℃	18.61	22.33	26.49	31.14	36.31	42.06	48.44	55.48					
	P		5.02	5.39	5.73	6.01	6.22	6.35	6.39	6.33					
	Q	30℃	18.45	22.21	26.41	31.11	36.35	42.17	48.63						
	P		4.61	4.95	5.23	5.44	5.57	5.59	5.51						

注：冷凝器出口过冷度5. 0K, 过热度5. 0K

Note：Condenser Outlet Subcooling 5.0K,Subheating 5.0K

R134a — **WW**

带喷气增焓 *EVI*

制热量
Heating Capacity

制热量 HEATING CAPACITY

型号Model	项目Item (KW)	Tc\Te	-20℃	-15℃	-10℃	-5℃	0℃	5℃	10℃	15℃	20℃	25℃	30℃	35℃	40℃
WW250KF-TWD-GV1	Q	85℃						57.02	63.38	70.50	78.47	87.32	97.13	107.96	119.86
	P							22.21	22.68	23.25	23.91	24.64	25.41	26.22	27.05
	Q	80℃	32.22	35.87	40.01	44.68	49.96	55.89	62.56	70.00	78.29	87.49	97.65	108.84	121.11
	P		18.73	18.60	18.65	18.84	19.16	19.60	20.13	20.74	21.41	22.13	22.87	23.62	24.36
	Q	75℃	30.23	34.11	38.49	43.41	48.95	55.16	62.11	69.85	78.45	87.96	98.45	109.99	122.62
	P		16.00	16.04	16.22	16.53	16.94	17.44	18.01	18.64	19.30	19.98	20.66	21.33	21.96
	Q	70℃	28.68	32.77	37.36	42.51	48.29	54.76	61.97	69.99	78.87	88.69	99.49	111.34	124.31
	P		13.77	13.96	14.25	14.65	15.13	15.67	16.26	16.88	17.51	18.13	18.73	19.29	19.79
	Q	65℃	27.50	31.77	36.56	41.93	47.93	54.63	62.08	70.36	79.51	89.60	100.70	112.85	126.13
	P		11.99	12.29	12.68	13.15	13.67	14.23	14.81	15.39	15.97	16.51	17.00	17.43	17.78
	Q	60℃	26.63	31.07	36.04	41.60	47.80	54.71	62.39	70.90	80.30	90.66	102.02	114.46	128.03
	P		10.58	10.98	11.44	11.94	12.49	13.04	13.59	14.12	14.62	15.06	15.42	15.69	15.86
	Q	55℃	26.02	30.61	35.74	41.46	47.85	54.95	62.84	71.56	81.19	91.78	103.39	116.09	129.94
	P		9.48	9.95	10.45	10.98	11.52	12.04	12.54	13.00	13.39	13.70	13.91	14.01	13.97
	Q	50℃	25.61	30.32	35.59	41.46	48.01	55.29	63.35	72.28	82.11	92.92	104.76		
	P		8.62	9.13	9.66	10.19	10.70	11.17	11.60	11.95	12.21	12.37	12.41		
	Q	45℃	25.33	30.15	35.54	41.54	48.23	55.66	63.89	72.99	83.01	94.02			
	P		7.94	8.47	9.00	9.50	9.96	10.36	10.68	10.91	11.03	11.01			
	Q	40℃	25.13	30.04	35.52	41.63	48.44	56.00	64.38	73.63	83.82				
	P		7.36	7.90	8.40	8.85	9.24	9.54	9.74	9.82	9.76				
	Q	35℃	24.95	29.93	35.49	41.69	48.60	56.27	64.77	74.16					
	P		6.83	7.34	7.80	8.18	8.47	8.65	8.70	8.61					
	Q	30℃	24.73	29.75	35.37	41.64	48.63	56.40	65.00						
	P		6.27	6.73	7.12	7.41	7.57	7.61	7.49						
WW300KF-TWD-GV1	Q	85℃						69.71	77.46	86.15	95.86	106.65	118.61	131.81	146.32
	P							27.32	27.89	28.60	29.40	30.30	31.25	32.25	33.26
	Q	80℃	39.46	43.91	48.95	54.64	61.07	68.31	76.43	85.51	95.61	106.82	119.21	132.85	147.81
	P		23.03	22.88	22.93	23.17	23.56	24.10	24.75	25.50	26.33	27.21	28.12	29.04	29.95
	Q	75℃	37.01	41.74	47.07	53.07	59.82	67.39	75.86	85.30	95.78	107.38	120.16	134.22	149.61
	P		19.67	19.72	19.95	20.32	20.83	21.45	22.15	22.92	23.73	24.57	25.41	26.23	27.00
	Q	70℃	35.09	40.07	45.67	51.95	59.00	66.88	75.67	85.45	96.28	108.24	121.40	135.85	151.65
	P		16.94	17.16	17.53	18.02	18.60	19.27	20.00	20.75	21.53	22.29	23.03	23.72	24.33
	Q	65℃	33.63	38.85	44.68	51.23	58.54	66.71	75.79	85.88	97.04	109.34	122.86	137.67	153.84
	P		14.75	15.11	15.59	16.17	16.81	17.50	18.21	18.93	19.64	20.30	20.91	21.44	21.86
	Q	60℃	32.56	37.98	44.04	50.81	58.37	66.79	76.16	86.53	97.98	110.60	124.45	139.60	156.13
	P		13.02	13.50	14.06	14.69	15.35	16.04	16.72	17.37	17.98	18.51	18.96	19.30	19.51
	Q	55℃	31.81	37.40	43.65	50.63	58.41	67.07	76.68	87.32	99.05	111.95	126.10	141.57	158.43
	P		11.66	12.23	12.85	13.50	14.17	14.81	15.43	15.98	16.46	16.85	17.11	17.23	17.19
	Q	50℃	31.29	37.04	43.46	50.62	58.60	67.47	77.30	88.17	100.16	113.33	127.75		
	P		10.60	11.23	11.88	12.53	13.16	13.74	14.26	14.69	15.02	15.22	15.26		
	Q	45℃	30.95	36.83	43.39	50.71	58.86	67.91	77.94	89.03	101.24	114.64			
	P		9.76	10.42	11.07	11.69	12.25	12.74	13.14	13.42	13.56	13.54			
	Q	40℃	30.70	36.68	43.36	50.82	59.11	68.33	78.53	89.80	102.21				
	P		9.05	9.71	10.33	10.89	11.36	11.73	11.98	12.08	12.01				
	Q	35℃	30.47	36.54	43.31	50.87	59.29	68.64	79.00	90.43					
	P		8.40	9.03	9.59	10.06	10.41	10.63	10.70	10.59					
	Q	30℃	30.20	36.32	43.17	50.81	59.32	68.78	79.26						
	P		7.71	8.28	8.76	9.11	9.32	9.36	9.22						

注：冷凝器出口过冷度5. 0K, 过热度5. 0K

Note：Condenser Outlet Subcooling 5.0K,Subheating 5.0K

制热量
Heating Capacity

制热量 HEATING CAPACITY

WW — **R410A**

不带喷气增焓 *W/O EVI*

型号Model	项目Item (KW)	Tc\Te	-20℃	-15℃	-10℃	-5℃	0℃	5℃	10℃	15℃
WW28KP-TFD-GN1	Q	65℃						8.16	9.28	10.59
	P							2.88	2.87	2.87
	Q	60℃					7.33	8.36	9.56	10.94
	P						2.55	2.54	2.54	2.55
	Q	55℃				6.53	7.48	8.58	9.85	11.31
	P					2.25	2.25	2.25	2.26	2.27
	Q	50℃			5.77	6.64	7.65	8.81	10.15	11.68
	P				1.99	1.99	2.00	2.00	2.02	2.04
	Q	45℃	4.33	5.05	5.85	6.78	7.84	9.05	10.45	12.04
	P		1.75	1.75	1.76	1.77	1.77	1.79	1.80	1.83
	Q	40℃	4.36	5.11	5.96	6.93	8.03	9.30	10.75	12.40
	P		1.54	1.55	1.56	1.57	1.58	1.60	1.62	1.65
	Q	35℃	4.41	5.19	6.08	7.08	8.23	9.55	11.05	
	P		1.36	1.37	1.38	1.39	1.40	1.42	1.45	
	Q	30℃	4.48	5.29	6.20	7.25	8.44	9.79		
	P		1.19	1.20	1.21	1.23	1.24	1.27		
	Q	25℃	4.57	5.40	6.34	7.41	8.63			
	P		1.03	1.04	1.06	1.07	1.09			
	Q	20℃	4.67	5.51	6.48	7.57	8.82			
	P		0.88	0.89	0.90	0.92	0.94			
WW34KP-TFD-GN1	Q	65℃						9.87	11.23	12.81
	P							3.49	3.48	3.47
	Q	60℃					8.86	10.11	11.56	13.24
	P						3.08	3.08	3.08	3.09
	Q	55℃				7.90	9.05	10.38	11.91	13.68
	P					2.73	2.72	2.73	2.73	2.75
	Q	50℃			6.98	8.04	9.26	10.66	12.28	14.12
	P				2.41	2.41	2.41	2.42	2.44	2.46
	Q	45℃	5.24	6.10	7.08	8.20	9.48	10.95	12.64	14.57
	P		2.11	2.12	2.13	2.14	2.15	2.16	2.18	2.22
	Q	40℃	5.28	6.18	7.21	8.38	9.72	11.25	13.01	15.01
	P		1.86	1.88	1.89	1.90	1.91	1.93	1.96	2.00
	Q	35℃	5.34	6.28	7.35	8.57	9.96	11.55	13.37	
	P		1.64	1.66	1.67	1.68	1.70	1.72	1.76	
	Q	30℃	5.42	6.40	7.51	8.77	10.20	11.85		
	P		1.44	1.45	1.47	1.48	1.50	1.53		
	Q	25℃	5.53	6.53	7.67	8.96	10.44			
	P		1.25	1.26	1.28	1.29	1.32			
	Q	20℃	5.65	6.67	7.83	9.16	10.67			
	P		1.06	1.08	1.09	1.11	1.13			

注：冷凝器出口过冷度8. 3K, 过热度11. 1K

Note：Condenser Outlet Subcooling8.3K,Subheating 11.1K

R410A — **WW**

不带喷气增焓 *W/O EVI*

制热量
Heating Capacity

制热量 HEATING CAPACITY

型号Model	项目Item (KW)	Tc\Te	-20℃	-15℃	-10℃	-5℃	0℃	5℃	10℃	15℃
WW48KP-TFD-GN1	Q	65℃						14.66	16.69	19.04
	P							5.18	5.17	5.16
	Q	60℃					13.17	15.03	17.18	19.68
	P						4.58	4.57	4.57	4.58
	Q	55℃				11.74	13.45	15.42	17.70	20.33
	P					4.05	4.05	4.05	4.06	4.09
	Q	50℃			10.37	11.95	13.76	15.84	18.24	20.99
	P				3.58	3.58	3.59	3.60	3.62	3.66
	Q	45℃	7.79	9.07	10.52	12.18	14.09	16.28	18.79	21.65
	P		3.14	3.15	3.16	3.17	3.19	3.21	3.24	3.29
	Q	40℃	7.84	9.19	10.71	12.45	14.44	16.72	19.33	22.30
	P		2.77	2.79	2.80	2.82	2.84	2.87	2.91	2.97
	Q	35℃	7.93	9.33	10.92	12.73	14.80	17.17	19.87	
	P		2.44	2.46	2.48	2.50	2.52	2.56	2.61	
	Q	30℃	8.06	9.51	11.15	13.03	15.16	17.60		
	P		2.14	2.16	2.18	2.20	2.24	2.28		
	Q	25℃	8.21	9.71	11.40	13.32	15.52			
	P		1.86	1.88	1.90	1.92	1.96			
	Q	20℃	8.39	9.91	11.64	13.61	15.86			
	P		1.58	1.60	1.62	1.65	1.69			
WW61KP-TFD-GN1	Q	65℃						19.52	22.21	25.34
	P							6.90	6.88	6.87
	Q	60℃					17.53	20.01	22.88	26.19
	P						6.10	6.09	6.09	6.10
	Q	55℃				15.63	17.90	20.53	23.57	27.06
	P					5.39	5.39	5.39	5.41	5.44
	Q	50℃			13.81	15.90	18.31	21.09	24.28	27.94
	P				4.76	4.77	4.78	4.79	4.82	4.87
	Q	45℃	10.37	12.08	14.01	16.22	18.76	21.67	25.01	28.82
	P		4.18	4.20	4.21	4.23	4.24	4.27	4.32	4.38
	Q	40℃	10.44	12.23	14.26	16.57	19.23	22.26	25.73	29.69
	P		3.69	3.71	3.73	3.75	3.78	3.82	3.87	3.95
	Q	35℃	10.56	12.43	14.54	16.95	19.71	22.85	26.45	
	P		3.25	3.28	3.30	3.33	3.36	3.41	3.48	
	Q	30℃	10.73	12.66	14.85	17.34	20.19	23.44		
	P		2.85	2.88	2.90	2.93	2.98	3.03		
	Q	25℃	10.93	12.92	15.17	17.73	20.66			
	P		2.47	2.50	2.53	2.56	2.61			
	Q	20℃	11.17	13.20	15.50	18.12	21.12			
	P		2.10	2.13	2.15	2.19	2.24			

注：冷凝器出口过冷度8. 3K, 过热度11. 1K

Note：Condenser Outlet Subcooling8.3K,Subheating 11.1K

制热量
Heating Capacity

制热量 HEATING CAPACITY

WW R410A

不带喷气增焓W/O EVI

型号Model	项目Item (KW)	Tc\Te	-20℃	-15℃	-10℃	-5℃	0℃	5℃	10℃	15℃
WW72KP-TFD-GN1	Q	65℃						20.50	23.32	26.61
	P							7.24	7.22	7.22
	Q	60℃					18.41	21.01	24.02	27.50
	P						6.40	6.39	6.39	6.41
	Q	55℃				16.41	18.80	21.56	24.75	28.42
	P					5.66	5.66	5.66	5.68	5.71
	Q	50℃			14.50	16.70	19.23	22.15	25.50	29.34
	P				5.00	5.01	5.02	5.03	5.07	5.12
	Q	45℃	10.89	12.68	14.71	17.03	19.70	22.76	26.26	30.26
	P		4.39	4.41	4.42	4.44	4.46	4.49	4.53	4.60
	Q	40℃	10.96	12.84	14.97	17.40	20.19	23.38	27.02	31.17
	P		3.87	3.90	3.92	3.94	3.97	4.01	4.07	4.15
	Q	35℃	11.09	13.05	15.27	17.80	20.69	24.00	27.77	
	P		3.41	3.44	3.46	3.49	3.53	3.58	3.65	
	Q	30℃	11.26	13.29	15.59	18.21	21.20	24.61		
	P		2.99	3.02	3.05	3.08	3.12	3.19		
	Q	25℃	11.48	13.57	15.93	18.62	21.70			
	P		2.60	2.62	2.65	2.69	2.74			
	Q	20℃	11.73	13.86	16.27	19.03	22.17			
	P		2.21	2.23	2.26	2.30	2.36			
WW81KP-TFD-GN1	Q	65℃						23.58	26.84	30.62
	P							8.33	8.31	8.30
	Q	60℃					21.18	24.17	27.64	31.64
	P						7.37	7.36	7.36	7.37
	Q	55℃				18.88	21.63	24.81	28.48	32.70
	P					6.51	6.51	6.52	6.53	6.57
	Q	50℃			16.68	19.21	22.12	25.48	29.34	33.76
	P				5.75	5.76	5.77	5.79	5.83	5.89
	Q	45℃	12.53	14.59	16.93	19.60	22.66	26.18	30.21	34.82
	P		5.05	5.07	5.09	5.11	5.13	5.16	5.22	5.30
	Q	40℃	12.61	14.77	17.22	20.02	23.23	26.90	31.09	35.86
	P		4.46	4.48	4.51	4.53	4.56	4.61	4.68	4.78
	Q	35℃	12.75	15.01	17.57	20.48	23.81	27.61	31.95	
	P		3.93	3.96	3.99	4.02	4.06	4.12	4.20	
	Q	30℃	12.96	15.29	17.94	20.95	24.39	28.31		
	P		3.45	3.48	3.51	3.55	3.60	3.66		
	Q	25℃	13.21	15.61	18.33	21.43	24.96			
	P		2.99	3.02	3.05	3.09	3.15			
	Q	20℃	13.49	15.94	18.72	21.89	25.51			
	P		2.54	2.57	2.60	2.65	2.71			

注：冷凝器出口过冷度8. 3K, 过热度11. 1K

Note：Condenser Outlet Subcooling8.3K,Subheating 11.1K

R410A WW

不带喷气增焓W/O EVI

制热量
Heating Capacity

制热量 HEATING CAPACITY

型号Model	项目Item (KW)	Tc\Te	-20℃	-15℃	-10℃	-5℃	0℃	5℃	10℃	15℃
WW94KP-TFD-GN1	Q	65℃						27.43	31.22	35.61
	P							9.69	9.67	9.66
	Q	60℃					24.64	28.11	32.15	36.81
	P						8.57	8.56	8.56	8.58
	Q	55℃				21.96	25.16	28.85	33.12	38.03
	P					7.58	7.57	7.58	7.60	7.65
	Q	50℃			19.41	22.35	25.74	29.64	34.13	39.27
	P				6.69	6.70	6.71	6.74	6.78	6.85
	Q	45℃	14.58	16.97	19.69	22.80	26.36	30.45	35.14	40.50
	P		5.87	5.90	5.92	5.94	5.97	6.01	6.07	6.16
	Q	40℃	14.67	17.18	20.04	23.29	27.02	31.29	36.16	41.72
	P		5.18	5.22	5.24	5.27	5.31	5.36	5.45	5.56
	Q	35℃	14.84	17.46	20.43	23.82	27.69	32.12	37.16	
	P		4.57	4.60	4.64	4.67	4.72	4.79	4.89	
	Q	30℃	15.07	17.79	20.87	24.37	28.37	32.94		
	P		4.01	4.04	4.08	4.12	4.18	4.26		
	Q	25℃	15.37	18.16	21.32	24.92	29.04			
	P		3.48	3.51	3.55	3.60	3.67			
	Q	20℃	15.70	18.55	21.78	25.47	29.67			
	P		2.95	2.99	3.03	3.08	3.15			
WW108KP-TFD-GN1	Q	65℃						30.21	34.38	39.22
	P							10.67	10.65	10.64
	Q	60℃					27.14	30.96	35.41	40.54
	P						9.44	9.42	9.42	9.45
	Q	55℃				24.19	27.71	31.78	36.48	41.89
	P					8.35	8.34	8.35	8.37	8.42
	Q	50℃			21.37	24.61	28.34	32.64	37.59	43.25
	P				7.37	7.38	7.39	7.42	7.47	7.54
	Q	45℃	16.06	18.69	21.68	25.11	29.03	33.54	38.71	44.61
	P		6.47	6.50	6.52	6.54	6.57	6.61	6.68	6.78
	Q	40℃	16.15	18.93	22.07	25.65	29.76	34.46	39.83	45.94
	P		5.71	5.74	5.77	5.81	5.85	5.91	6.00	6.12
	Q	35℃	16.34	19.23	22.50	26.23	30.50	35.37	40.93	
	P		5.03	5.07	5.11	5.15	5.20	5.28	5.38	
	Q	30℃	16.60	19.59	22.98	26.84	31.24	36.27		
	P		4.41	4.45	4.49	4.54	4.61	4.70		
	Q	25℃	16.92	20.00	23.48	27.45	31.98			
	P		3.83	3.87	3.91	3.96	4.04			
	Q	20℃	17.29	20.42	23.99	28.05	32.68			
	P		3.25	3.29	3.34	3.39	3.47			

注：冷凝器出口过冷度8. 3K, 过热度11. 1K

Note：Condenser Outlet Subcooling8.3K,Subheating 11.1K

制热量
Heating Capacity

制热量 HEATING CAPACITY

WW — **R410A**

不带喷气增焓 *W/O EVI*

型号Model	项目Item (KW)	Tc\Te	-20℃	-15℃	-10℃	-5℃	0℃	5℃	10℃	15℃
WW125KP-TFD-GN1	Q	65℃						34.22	38.93	44.42
	P							12.09	12.06	12.05
	Q	60℃					30.73	35.06	40.10	45.91
	P						10.69	10.67	10.67	10.70
	Q	55℃				27.39	31.38	35.99	41.31	47.44
	P					9.45	9.45	9.45	9.48	9.54
	Q	50℃			24.20	27.87	32.10	36.97	42.56	48.98
	P				8.35	8.36	8.37	8.40	8.46	8.54
	Q	45℃	18.18	21.17	24.56	28.43	32.88	37.98	43.83	50.51
	P		7.32	7.36	7.38	7.41	7.44	7.49	7.57	7.68
	Q	40℃	18.29	21.43	24.99	29.05	33.70	39.02	45.10	52.03
	P		6.46	6.50	6.54	6.57	6.62	6.69	6.79	6.93
	Q	35℃	18.50	21.78	25.48	29.71	34.54	40.06	46.35	
	P		5.70	5.74	5.78	5.83	5.89	5.98	6.10	
	Q	30℃	18.80	22.19	26.02	30.39	35.38	41.08		
	P		5.00	5.04	5.09	5.14	5.22	5.32		
	Q	25℃	19.16	22.65	26.59	31.08	36.21			
	P		4.34	4.38	4.43	4.49	4.57			
	Q	20℃	19.58	23.13	27.16	31.76	37.01			
	P		3.69	3.73	3.78	3.84	3.93			
WW144KP-TFD-GN1	Q	65℃						37.91	43.14	49.22
	P							13.39	13.36	13.35
	Q	60℃					34.05	38.85	44.43	50.87
	P						11.84	11.82	11.82	11.85
	Q	55℃				30.35	34.77	39.88	45.77	52.56
	P					10.47	10.47	10.47	10.50	10.57
	Q	50℃			26.82	30.88	35.57	40.96	47.16	54.27
	P				9.25	9.26	9.28	9.31	9.37	9.47
	Q	45℃	20.15	23.46	27.21	31.50	36.43	42.09	48.57	55.97
	P		8.12	8.15	8.18	8.21	8.24	8.30	8.39	8.51
	Q	40℃	20.27	23.75	27.69	32.19	37.34	43.23	49.97	57.65
	P		7.16	7.21	7.24	7.28	7.34	7.41	7.52	7.68
	Q	35℃	20.50	24.13	28.24	32.92	38.27	44.38	51.36	
	P		6.31	6.36	6.41	6.46	6.53	6.62	6.75	
	Q	30℃	20.83	24.59	28.84	33.68	39.21	45.52		
	P		5.54	5.59	5.64	5.70	5.78	5.89		
	Q	25℃	21.24	25.09	29.46	34.44	40.13			
	P		4.81	4.85	4.91	4.98	5.07			
	Q	20℃	21.69	25.63	30.10	35.19	41.01			
	P		4.08	4.13	4.18	4.26	4.36			

注：冷凝器出口过冷度8. 3K, 过热度11. 1K

Note：Condenser Outlet Subcooling8.3K,Subheating 11.1K

R410A — **WW**

不带喷气增焓 *W/O EVI*

制热量
Heating Capacity

制热量 HEATING CAPACITY

型号Model	项目Item (KW)	Tc\Te	-20℃	-15℃	-10℃	-5℃	0℃	5℃	10℃	15℃
WW154KP-TFD-GN1	Q	65℃						43.72	49.74	56.75
	P							15.44	15.40	15.39
	Q	60℃					39.26	44.80	51.23	58.66
	P						13.66	13.63	13.63	13.67
	Q	55℃				35.00	40.09	45.98	52.78	60.61
	P					12.07	12.07	12.08	12.11	12.19
	Q	50℃			30.92	35.61	41.01	47.23	54.38	62.58
	P				10.67	10.68	10.70	10.74	10.80	10.91
	Q	45℃	23.23	27.05	31.37	36.32	42.01	48.53	56.00	64.54
	P		9.36	9.40	9.43	9.46	9.51	9.57	9.67	9.82
	Q	40℃	23.37	27.38	31.93	37.12	43.05	49.85	57.63	66.48
	P		8.26	8.31	8.35	8.40	8.46	8.55	8.68	8.86
	Q	35℃	23.64	27.83	32.56	37.96	44.13	51.18	59.22	
	P		7.28	7.34	7.39	7.45	7.53	7.64	7.79	
	Q	30℃	24.02	28.35	33.25	38.83	45.21	52.48		
	P		6.39	6.44	6.50	6.57	6.66	6.79		
	Q	25℃	24.49	28.93	33.97	39.72	46.27			
	P		5.54	5.60	5.66	5.74	5.84			
	Q	20℃	25.01	29.55	34.71	40.58	47.29			
	P		4.71	4.76	4.83	4.91	5.02			
WW170KP-TFD-GN1	Q	65℃						51.26	58.33	66.55
	P							18.11	18.06	18.05
	Q	60℃					46.04	52.53	60.07	68.78
	P						16.01	15.99	15.99	16.03
	Q	55℃				41.04	47.01	53.92	61.89	71.07
	P					14.16	14.15	14.16	14.20	14.29
	Q	50℃			36.26	41.76	48.09	55.38	63.77	73.38
	P				12.51	12.52	12.54	12.59	12.67	12.80
	Q	45℃	27.24	31.72	36.79	42.59	49.26	56.91	65.67	75.68
	P		10.97	11.03	11.06	11.10	11.15	11.22	11.34	11.51
	Q	40℃	27.40	32.11	37.44	43.52	50.49	58.46	67.57	77.95
	P		9.68	9.75	9.80	9.85	9.92	10.02	10.17	10.38
	Q	35℃	27.72	32.63	38.18	44.51	51.75	60.01	69.44	
	P		8.54	8.60	8.66	8.73	8.82	8.95	9.13	
	Q	30℃	28.17	33.24	38.99	45.54	53.01	61.54		
	P		7.49	7.56	7.62	7.71	7.81	7.97		
	Q	25℃	28.71	33.93	39.84	46.57	54.25			
	P		6.50	6.56	6.64	6.73	6.85			
	Q	20℃	29.33	34.65	40.70	47.58	55.45			
	P		5.52	5.59	5.66	5.76	5.89			

注：冷凝器出口过冷度8. 3K, 过热度11. 1K

Note：Condenser Outlet Subcooling8.3K,Subheating 11.1K

制热量
Heating Capacity

制热量 HEATING CAPACITY

WW — **R410A**

不带喷气增焓 *W/O EVI*

型号Model	项目Item (KW)	Tc\Te	-20℃	-15℃	-10℃	-5℃	0℃	5℃	10℃	15℃
WW235KP-TWD-GN1	Q	65℃						64.98	73.94	84.35
	P							22.95	22.89	22.88
	Q	60℃					58.36	66.59	76.15	87.19
	P						20.30	20.27	20.27	20.32
	Q	55℃				52.02	59.59	68.34	78.46	90.08
	P					17.95	17.94	17.95	18.00	18.11
	Q	50℃			45.97	52.93	60.96	70.20	80.83	93.01
	P				15.85	15.87	15.90	15.96	16.06	16.22
	Q	45℃	34.53	40.20	46.63	53.99	62.44	72.13	83.24	95.93
	P		13.91	13.98	14.02	14.07	14.13	14.23	14.37	14.59
	Q	40℃	34.74	40.70	47.46	55.17	63.99	74.10	85.65	98.81
	P		12.28	12.35	12.42	12.49	12.58	12.71	12.90	13.16
	Q	35℃	35.14	41.36	48.40	56.42	65.59	76.07	88.03	
	P		10.82	10.90	10.98	11.07	11.19	11.35	11.58	
	Q	30℃	35.71	42.14	49.42	57.72	67.20	78.01		
	P		9.49	9.58	9.66	9.77	9.91	10.10		
	Q	25℃	36.40	43.01	50.50	59.03	68.77			
	P		8.24	8.32	8.41	8.53	8.68			
	Q	20℃	37.18	43.93	51.59	60.32	70.29			
	P		7.00	7.08	7.17	7.30	7.47			
WW292KP-TWD-GN1	Q	65℃						80.28	91.35	104.22
	P							28.36	28.29	28.27
	Q	60℃					72.11	82.28	94.08	107.72
	P						25.08	25.04	25.04	25.10
	Q	55℃				64.27	73.62	84.44	96.93	111.30
	P					22.17	22.16	22.18	22.25	22.38
	Q	50℃			56.79	65.40	75.31	86.74	99.87	114.92
	P				19.59	19.61	19.65	19.71	19.84	20.04
	Q	45℃	42.66	49.67	57.62	66.71	77.14	89.12	102.85	118.53
	P		17.19	17.27	17.33	17.38	17.46	17.58	17.76	18.03
	Q	40℃	42.92	50.29	58.64	68.16	79.07	91.56	105.83	122.09
	P		15.17	15.26	15.34	15.43	15.54	15.70	15.93	16.26
	Q	35℃	43.42	51.10	59.80	69.71	81.04	93.99	108.76	
	P		13.37	13.47	13.57	13.68	13.82	14.02	14.30	
	Q	30℃	44.12	52.06	61.06	71.32	83.02	96.39		
	P		11.73	11.83	11.94	12.07	12.24	12.48		
	Q	25℃	44.97	53.14	62.39	72.94	84.97			
	P		10.18	10.28	10.39	10.54	10.73			
	Q	20℃	45.94	54.27	63.74	74.53	86.84			
	P		8.65	8.75	8.86	9.01	9.23			

注：冷凝器出口过冷度8. 3K, 过热度11. 1K

Note：Condenser Outlet Subcooling8.3K,Subheating 11.1K

R410A — **WW**

带喷气增焓 *EVI*

制热量
Heating Capacity

制热量 HEATING CAPACITY

型号Model	项目Item (KW)	Tc\Te	-35℃	-30℃	-25℃	-20℃	-15℃	-10℃	-5℃	0℃	5℃	10℃	15℃	20℃
WW50HP-TFD-GV1	Q	65℃										10.78		
	P											3.48		
	Q	60℃		2.83	3.72	4.66	5.64	6.65	7.67	8.70	9.73	10.75	11.75	12.71
	P			2.92	2.97	3.01	3.03	3.04	3.04	3.03	3.03	3.02	3.02	3.02
	Q	55℃		3.20	4.04	4.92	5.85	6.80	7.77	8.74	9.71	10.67	11.61	12.51
	P			2.54	2.59	2.63	2.65	2.66	2.66	2.66	2.66	2.65	2.65	2.66
	Q	50℃	2.64	3.40	4.21	5.06	5.95	6.87	7.80	8.74	9.67	10.60	11.49	12.36
	P		2.16	2.24	2.29	2.32	2.35	2.36	2.36	2.36	2.36	2.36	2.36	2.38
	Q	45℃	2.74	3.49	4.29	5.13	6.01	6.92	7.84	8.76	9.68	10.58	11.47	12.31
	P		1.92	1.99	2.04	2.08	2.10	2.12	2.13	2.13	2.13	2.14	2.15	2.16
	Q	40℃	2.76	3.52	4.33	5.19	6.08	7.00	7.92	8.86	9.78	10.69	11.58	12.43
	P		1.71	1.79	1.84	1.89	1.91	1.93	1.95	1.95	1.96	1.97	1.99	2.01
	Q	35℃	2.76	3.56	4.41	5.30	6.22	7.17	8.12	9.08	10.04	10.97	11.88	12.76
	P		1.55	1.63	1.68	1.73	1.76	1.79	1.80	1.82	1.83	1.85	1.87	1.90
	Q	30℃	2.81	3.66	4.56	5.51	6.49	7.48	8.49	9.50	10.50	11.49	12.45	
	P		1.41	1.49	1.55	1.60	1.64	1.67	1.69	1.72	1.74	1.76	1.79	
	Q	25℃	2.95	3.88	4.86	5.88	6.93	8.00	9.08	10.17	11.24	12.29		
	P		1.28	1.36	1.43	1.49	1.54	1.57	1.60	1.63	1.66	1.70		
	Q	20℃	3.24	4.27	5.35	6.47	7.62	8.78	9.96	11.14	12.30			
	P		1.15	1.24	1.32	1.38	1.44	1.48	1.52	1.56	1.60			
	Q	15℃	3.75	4.90	6.10	7.34	8.60	9.88	11.18	12.47				
	P		1.01	1.11	1.20	1.27	1.33	1.38	1.43	1.48				
	Q	10℃	4.52	5.81	7.15	8.53	9.94	11.36	12.79					
	P		0.85	0.96	1.06	1.14	1.21	1.27	1.33					
WW70HP-TFD-GV1	Q	65℃										13.04		
	P											4.21		
	Q	60℃		3.43	4.50	5.64	6.82	8.04	9.28	10.53	11.77	13.00	14.21	15.38
	P			3.53	3.59	3.64	3.66	3.67	3.67	3.67	3.66	3.65	3.65	3.65
	Q	55℃		3.87	4.88	5.96	7.07	8.22	9.39	10.57	11.75	12.91	14.04	15.14
	P			3.07	3.14	3.18	3.20	3.22	3.22	3.22	3.21	3.21	3.21	3.21
	Q	50℃	3.20	4.11	5.09	6.12	7.20	8.31	9.44	10.57	11.70	12.82	13.91	14.95
	P		2.62	2.70	2.77	2.81	2.84	2.85	2.86	2.86	2.86	2.86	2.86	2.87
	Q	45℃	3.31	4.22	5.19	6.21	7.27	8.37	9.48	10.60	11.71	12.80	13.87	14.89
	P		2.32	2.40	2.47	2.51	2.55	2.56	2.57	2.58	2.58	2.59	2.60	2.62
	Q	40℃	3.34	4.26	5.24	6.28	7.36	8.46	9.59	10.71	11.83	12.93	14.00	15.03
	P		2.07	2.16	2.23	2.28	2.32	2.34	2.35	2.36	2.37	2.39	2.40	2.43
	Q	35℃	3.34	4.31	5.33	6.41	7.53	8.67	9.83	10.99	12.14	13.28	14.38	15.43
	P		1.87	1.97	2.04	2.09	2.13	2.16	2.18	2.20	2.22	2.24	2.26	2.30
	Q	30℃	3.40	4.43	5.52	6.66	7.85	9.05	10.27	11.49	12.71	13.90	15.06	
	P		1.70	1.80	1.88	1.94	1.98	2.02	2.05	2.08	2.10	2.13	2.17	
	Q	25℃	3.57	4.69	5.88	7.11	8.39	9.68	10.99	12.30	13.60	14.87		
	P		1.54	1.65	1.73	1.80	1.86	1.90	1.94	1.98	2.01	2.05		
	Q	20℃	3.92	5.17	6.48	7.83	9.22	10.63	12.05	13.47	14.88			
	P		1.39	1.50	1.60	1.67	1.74	1.79	1.84	1.89	1.93			
	Q	15℃	4.53	5.93	7.38	8.87	10.40	11.96	13.52	15.08				
	P		1.22	1.35	1.45	1.53	1.61	1.67	1.73	1.79				
	Q	10℃	5.47	7.03	8.65	10.32	12.02	13.74	15.47					
	P		1.03	1.16	1.28	1.37	1.46	1.54	1.61					

注：冷凝器出口过冷度8. 3K, 过热度11. 1K

Note：Condenser Outlet Subcooling8.3K,Subheating 11.1K

制热量
Heating Capacity

WW — **R410A**

带喷气增焓 *EVI*

制热量 HEATING CAPACITY

型号Model	项目Item (KW)	Tc\Te	-35℃	-30℃	-25℃	-20℃	-15℃	-10℃	-5℃	0℃	5℃	10℃	15℃	20℃
WW96HP-TFD-GV1	Q	65℃										19.37		
	P											6.25		
	Q	60℃		5.09	6.69	8.38	10.14	11.95	13.79	15.64	17.49	19.32	21.12	22.86
	P			5.25	5.34	5.40	5.44	5.46	5.46	5.45	5.44	5.43	5.42	5.43
	Q	55℃		5.75	7.26	8.85	10.51	12.22	13.96	15.71	17.46	19.18	20.87	22.49
	P			4.57	4.66	4.72	4.76	4.78	4.79	4.78	4.77	4.77	4.77	4.78
	Q	50℃	4.75	6.11	7.56	9.10	10.70	12.35	14.03	15.71	17.39	19.05	20.66	22.22
	P		3.89	4.02	4.11	4.18	4.22	4.24	4.25	4.25	4.25	4.24	4.25	4.27
	Q	45℃	4.92	6.27	7.71	9.23	10.81	12.43	14.09	15.75	17.40	19.03	20.61	22.13
	P		3.45	3.57	3.67	3.74	3.78	3.81	3.82	3.83	3.84	3.84	3.86	3.89
	Q	40℃	4.96	6.33	7.79	9.33	10.93	12.58	14.24	15.92	17.58	19.22	20.81	22.34
	P		3.08	3.22	3.32	3.39	3.44	3.47	3.50	3.51	3.53	3.54	3.57	3.61
	Q	35℃	4.97	6.40	7.93	9.53	11.18	12.88	14.60	16.33	18.04	19.73	21.36	22.94
	P		2.78	2.92	3.03	3.11	3.17	3.21	3.24	3.27	3.30	3.33	3.36	3.42
	Q	30℃	5.05	6.58	8.21	9.90	11.66	13.45	15.26	17.08	18.88	20.65	22.38	
	P		2.53	2.67	2.79	2.88	2.95	3.00	3.05	3.09	3.12	3.17	3.22	
	Q	25℃	5.30	6.98	8.74	10.57	12.46	14.39	16.33	18.28	20.21	22.10		
	P		2.30	2.45	2.58	2.68	2.76	2.83	2.88	2.94	2.99	3.05		
	Q	20℃	5.83	7.68	9.62	11.63	13.69	15.79	17.91	20.02	22.11			
	P		2.07	2.23	2.37	2.49	2.58	2.66	2.73	2.80	2.87			
	Q	15℃	6.74	8.81	10.96	13.19	15.46	17.77	20.09	22.41				
	P		1.82	2.00	2.15	2.28	2.39	2.49	2.58	2.66				
	Q	10℃	8.12	10.45	12.86	15.34	17.86	20.42	22.99					
	P		1.53	1.73	1.90	2.04	2.17	2.29	2.40					
WW126HP-TFD-GV1	Q	65℃										25.79		
	P											8.33		
	Q	60℃		6.78	8.91	11.16	13.50	15.90	18.35	20.82	23.29	25.73	28.11	30.43
	P			6.99	7.11	7.19	7.24	7.26	7.27	7.26	7.24	7.23	7.22	7.23
	Q	55℃		7.65	9.66	11.79	14.00	16.27	18.58	20.92	23.24	25.54	27.78	29.95
	P			6.08	6.21	6.29	6.34	6.36	6.37	6.37	6.35	6.35	6.34	6.36
	Q	50℃	6.32	8.13	10.07	12.11	14.25	16.44	18.67	20.92	23.15	25.36	27.51	29.58
	P		5.18	5.35	5.47	5.56	5.61	5.64	5.65	5.66	5.65	5.65	5.66	5.68
	Q	45℃	6.55	8.34	10.26	12.28	14.39	16.55	18.75	20.96	23.16	25.33	27.44	29.47
	P		4.59	4.76	4.89	4.98	5.04	5.07	5.09	5.10	5.11	5.12	5.14	5.18
	Q	40℃	6.61	8.43	10.37	12.43	14.56	16.74	18.96	21.19	23.41	25.59	27.70	29.74
	P		4.10	4.28	4.41	4.51	4.58	4.63	4.66	4.68	4.70	4.72	4.75	4.81
	Q	35℃	6.62	8.52	10.55	12.68	14.89	17.15	19.44	21.74	24.02	26.26	28.44	30.53
	P		3.71	3.89	4.03	4.14	4.22	4.28	4.32	4.35	4.39	4.43	4.48	4.55
	Q	30℃	6.72	8.76	10.93	13.19	15.52	17.91	20.32	22.74	25.14	27.50	29.79	
	P		3.37	3.56	3.71	3.83	3.93	4.00	4.06	4.11	4.16	4.22	4.29	
	Q	25℃	7.06	9.29	11.63	14.07	16.59	19.15	21.74	24.33	26.90	29.42		
	P		3.06	3.26	3.43	3.57	3.67	3.76	3.84	3.91	3.98	4.06		
	Q	20℃	7.76	10.23	12.81	15.49	18.23	21.02	23.84	26.65	29.44			
	P		2.75	2.97	3.16	3.31	3.44	3.54	3.64	3.73	3.82			
	Q	15℃	8.97	11.72	14.59	17.55	20.58	23.65	26.74	29.83				
	P		2.42	2.66	2.86	3.04	3.18	3.31	3.43	3.55				
	Q	10℃	10.81	13.91	17.12	20.42	23.78	27.18	30.60					
	P		2.04	2.30	2.53	2.72	2.89	3.04	3.19					

注：冷凝器出口过冷度8. 3K, 过热度11. 1K

Note：Condenser Outlet Subcooling8.3K,Subheating 11.1K

R410A — **WW**

带喷气增焓 *EVI*

制热量
Heating Capacity

制热量 HEATING CAPACITY

型号Model	项目Item (KW)	Tc\Te	-35℃	-30℃	-25℃	-20℃	-15℃	-10℃	-5℃	0℃	5℃	10℃	15℃	20℃
WW130HP-TFD-GV1	Q	65℃										27.08		
	P											8.74		
	Q	60℃		7.12	9.36	11.72	14.18	16.70	19.27	21.87	24.45	27.01	29.52	31.95
	P			7.34	7.46	7.55	7.60	7.63	7.63	7.62	7.61	7.59	7.58	7.59
	Q	55℃		8.04	10.15	12.38	14.70	17.08	19.51	21.96	24.40	26.82	29.17	31.45
	P			6.39	6.52	6.60	6.66	6.68	6.69	6.68	6.67	6.66	6.66	6.68
	Q	50℃	6.64	8.54	10.57	12.72	14.96	17.26	19.61	21.96	24.31	26.63	28.89	31.06
	P		5.44	5.62	5.75	5.84	5.89	5.93	5.94	5.94	5.93	5.93	5.94	5.97
	Q	45℃	6.88	8.76	10.77	12.90	15.11	17.38	19.69	22.01	24.32	26.60	28.81	30.94
	P		4.82	5.00	5.13	5.22	5.29	5.33	5.35	5.36	5.36	5.37	5.40	5.43
	Q	40℃	6.94	8.85	10.89	13.05	15.28	17.58	19.91	22.25	24.58	26.87	29.09	31.23
	P		4.31	4.49	4.63	4.74	4.81	4.86	4.89	4.91	4.93	4.96	4.99	5.05
	Q	35℃	6.95	8.95	11.08	13.32	15.63	18.01	20.41	22.83	25.22	27.58	29.87	32.06
	P		3.89	4.08	4.23	4.35	4.43	4.49	4.54	4.57	4.61	4.65	4.70	4.78
	Q	30℃	7.06	9.20	11.47	13.85	16.30	18.80	21.34	23.88	26.40	28.87	31.28	
	P		3.53	3.74	3.90	4.03	4.12	4.20	4.26	4.31	4.37	4.43	4.50	
	Q	25℃	7.41	9.75	12.22	14.78	17.42	20.11	22.83	25.55	28.25	30.90		
	P		3.21	3.43	3.60	3.74	3.86	3.95	4.03	4.10	4.18	4.26		
	Q	20℃	8.15	10.74	13.45	16.26	19.14	22.08	25.03	27.98	30.91			
	P		2.89	3.12	3.32	3.47	3.61	3.72	3.82	3.92	4.02			
	Q	15℃	9.42	12.31	15.33	18.43	21.61	24.84	28.08	31.33				
	P		2.54	2.80	3.01	3.19	3.34	3.48	3.60	3.72				
	Q	10℃	11.36	14.61	17.98	21.44	24.97	28.54	32.13					
	P		2.14	2.42	2.65	2.86	3.04	3.20	3.35					
WW150HP-TFD-GV1	Q	65℃										31.16		
	P											10.06		
	Q	60℃		8.19	10.77	13.48	16.31	19.22	22.17	25.16	28.13	31.08	33.96	36.76
	P			8.44	8.59	8.69	8.75	8.78	8.78	8.77	8.75	8.73	8.72	8.73
	Q	55℃		9.25	11.67	14.24	16.91	19.66	22.45	25.27	28.08	30.85	33.56	36.18
	P			7.35	7.50	7.60	7.66	7.69	7.70	7.69	7.68	7.67	7.66	7.68
	Q	50℃	7.64	9.82	12.16	14.64	17.21	19.86	22.56	25.27	27.97	30.64	33.24	35.74
	P		6.26	6.46	6.61	6.72	6.78	6.82	6.83	6.83	6.83	6.83	6.84	6.87
	Q	45℃	7.92	10.08	12.39	14.84	17.38	20.00	22.65	25.33	27.99	30.60	33.15	35.60
	P		5.54	5.75	5.90	6.01	6.08	6.13	6.15	6.16	6.17	6.18	6.21	6.25
	Q	40℃	7.98	10.18	12.53	15.01	17.59	20.23	22.91	25.60	28.28	30.91	33.47	35.93
	P		4.96	5.17	5.33	5.45	5.53	5.59	5.62	5.65	5.67	5.70	5.74	5.81
	Q	35℃	7.99	10.30	12.75	15.32	17.99	20.72	23.49	26.26	29.02	31.73	34.36	36.89
	P		4.48	4.70	4.87	5.00	5.10	5.17	5.22	5.26	5.30	5.35	5.41	5.50
	Q	30℃	8.12	10.59	13.20	15.93	18.75	21.63	24.55	27.47	30.37	33.22	35.99	
	P		4.07	4.30	4.49	4.63	4.74	4.83	4.90	4.96	5.02	5.09	5.18	
	Q	25℃	8.53	11.22	14.05	17.00	20.04	23.14	26.27	29.40	32.50	35.55		
	P		3.69	3.94	4.15	4.31	4.44	4.55	4.64	4.72	4.81	4.90		
	Q	20℃	9.38	12.36	15.48	18.71	22.03	25.40	28.80	32.20	35.57			
	P		3.32	3.59	3.81	4.00	4.15	4.28	4.40	4.51	4.62			
	Q	15℃	10.83	14.16	17.63	21.21	24.87	28.58	32.31	36.04				
	P		2.93	3.22	3.46	3.67	3.85	4.00	4.15	4.28				
	Q	10℃	13.07	16.81	20.69	24.67	28.73	32.84	36.97					
	P		2.47	2.78	3.05	3.29	3.49	3.68	3.85					

注：冷凝器出口过冷度8. 3K, 过热度11. 1K

Note：Condenser Outlet Subcooling8.3K,Subheating 11.1K

制热量
Heating Capacity

制热量 HEATING CAPACITY

WW — **R410A**

带喷气增焓 *EVI*

型号Model	项目Item (KW)	Tc\Te	-35℃	-30℃	-25℃	-20℃	-15℃	-10℃	-5℃	0℃	5℃	10℃	15℃	20℃
WW170HP-TFD-GV1	Q	65℃										36.24		
	P											11.70		
	Q	60℃		9.52	12.52	15.68	18.97	22.35	25.79	29.26	32.73	36.15	39.51	42.76
	P			9.82	9.99	10.11	10.18	10.21	10.21	10.20	10.18	10.16	10.15	10.16
	Q	55℃		10.75	13.58	16.56	19.67	22.86	26.12	29.39	32.66	35.89	39.04	42.08
	P			8.55	8.72	8.84	8.91	8.94	8.95	8.95	8.93	8.92	8.92	8.94
	Q	50℃	8.88	11.42	14.15	17.02	20.02	23.10	26.24	29.40	32.54	35.64	38.66	41.57
	P		7.28	7.52	7.69	7.81	7.89	7.93	7.95	7.95	7.94	7.94	7.95	7.99
	Q	45℃	9.21	11.72	14.42	17.26	20.22	23.26	26.35	29.46	32.55	35.60	38.56	41.41
	P		6.45	6.69	6.87	6.99	7.08	7.13	7.16	7.17	7.18	7.19	7.22	7.27
	Q	40℃	9.28	11.84	14.58	17.46	20.46	23.53	26.65	29.78	32.90	35.96	38.93	41.79
	P		5.77	6.01	6.20	6.34	6.44	6.50	6.54	6.57	6.60	6.63	6.68	6.75
	Q	35℃	9.30	11.98	14.83	17.82	20.92	24.10	27.32	30.55	33.76	36.91	39.97	42.91
	P		5.21	5.47	5.67	5.82	5.93	6.01	6.07	6.12	6.17	6.22	6.29	6.39
	Q	30℃	9.45	12.31	15.35	18.53	21.81	25.16	28.56	31.96	35.33	38.64	41.86	
	P		4.73	5.00	5.22	5.39	5.52	5.62	5.70	5.77	5.84	5.92	6.02	
	Q	25℃	9.92	13.05	16.35	19.78	23.31	26.92	30.55	34.19	37.80	41.35		
	P		4.29	4.59	4.82	5.01	5.16	5.29	5.39	5.49	5.59	5.70		
	Q	20℃	10.91	14.37	18.00	21.76	25.62	29.54	33.50	37.45	41.37			
	P		3.87	4.18	4.44	4.65	4.83	4.98	5.11	5.24	5.37			
	Q	15℃	12.60	16.48	20.51	24.67	28.93	33.24	37.59	41.92				
	P		3.40	3.74	4.03	4.27	4.47	4.66	4.82	4.98				
	Q	10℃	15.20	19.55	24.06	28.69	33.42	38.20	43.01					
	P		2.87	3.24	3.55	3.82	4.06	4.28	4.48					
WW200HP-TFD-GV1	Q	65℃										39.91		
	P											12.89		
	Q	60℃		10.49	13.79	17.27	20.89	24.62	28.41	32.23	36.04	39.82	43.51	47.09
	P			10.81	11.00	11.13	11.21	11.24	11.25	11.23	11.21	11.19	11.18	11.18
	Q	55℃		11.84	14.96	18.24	21.66	25.18	28.76	32.37	35.97	39.52	43.00	46.35
	P			9.42	9.60	9.73	9.81	9.85	9.86	9.85	9.84	9.82	9.82	9.84
	Q	50℃	9.78	12.58	15.58	18.75	22.05	25.44	28.90	32.37	35.84	39.25	42.58	45.78
	P		8.02	8.28	8.47	8.60	8.69	8.73	8.75	8.75	8.75	8.75	8.76	8.80
	Q	45℃	10.14	12.91	15.88	19.01	22.27	25.62	29.02	32.45	35.85	39.21	42.47	45.60
	P		7.10	7.36	7.56	7.70	7.79	7.85	7.88	7.90	7.91	7.92	7.95	8.01
	Q	40℃	10.22	13.04	16.06	19.23	22.53	25.91	29.35	32.80	36.23	39.60	42.88	46.03
	P		6.35	6.62	6.83	6.98	7.09	7.16	7.21	7.24	7.27	7.30	7.36	7.44
	Q	35℃	10.24	13.19	16.33	19.63	23.04	26.54	30.09	33.65	37.18	40.65	44.02	47.26
	P		5.74	6.02	6.24	6.41	6.53	6.62	6.69	6.74	6.79	6.85	6.93	7.04
	Q	30℃	10.40	13.56	16.91	20.41	24.02	27.72	31.45	35.19	38.91	42.56	46.10	
	P		5.21	5.51	5.75	5.93	6.08	6.19	6.28	6.36	6.44	6.53	6.63	
	Q	25℃	10.92	14.37	18.00	21.78	25.68	29.64	33.65	37.66	41.63	45.54		
	P		4.73	5.05	5.31	5.52	5.69	5.82	5.94	6.05	6.16	6.28		
	Q	20℃	12.01	15.83	19.83	23.97	28.22	32.54	36.89	41.25	45.56			
	P		4.26	4.60	4.89	5.12	5.32	5.48	5.63	5.77	5.92			
	Q	15℃	13.88	18.15	22.59	27.17	31.86	36.61	41.39	46.17				
	P		3.75	4.12	4.43	4.70	4.93	5.13	5.31	5.49				
	Q	10℃	16.74	21.53	26.50	31.60	36.80	42.07	47.36					
	P		3.16	3.56	3.91	4.21	4.47	4.71	4.93					

注：冷凝器出口过冷度8. 3K, 过热度11. 1K

Note：Condenser Outlet Subcooling8.3K,Subheating 11.1K

R410A — **WW**

带喷气增焓 *EVI*

制热量
Heating Capacity

制热量 HEATING CAPACITY

型号Model	项目Item (KW)	Tc\Te	-35℃	-30℃	-25℃	-20℃	-15℃	-10℃	-5℃	0℃	5℃	10℃	15℃	20℃
WW220HP-TFD-GV1	Q	65℃										45.20		
	P											14.59		
	Q	60℃		11.88	15.62	19.56	23.66	27.88	32.17	36.50	40.82	45.09	49.28	53.33
	P			12.24	12.46	12.61	12.69	12.73	12.74	12.72	12.70	12.67	12.66	12.67
	Q	55℃		13.41	16.94	20.66	24.53	28.52	32.57	36.66	40.74	44.76	48.69	52.49
	P			10.66	10.88	11.02	11.11	11.16	11.17	11.16	11.14	11.12	11.12	11.15
	Q	50℃	11.08	14.25	17.65	21.23	24.97	28.81	32.73	36.66	40.58	44.45	48.22	51.85
	P		9.08	9.38	9.59	9.74	9.84	9.89	9.91	9.91	9.91	9.90	9.92	9.96
	Q	45℃	11.49	14.62	17.98	21.53	25.22	29.01	32.87	36.74	40.60	44.40	48.09	51.64
	P		8.04	8.34	8.56	8.72	8.83	8.89	8.92	8.94	8.95	8.97	9.01	9.07
	Q	40℃	11.58	14.77	18.18	21.78	25.51	29.35	33.24	37.14	41.03	44.85	48.56	52.12
	P		7.19	7.50	7.74	7.91	8.03	8.11	8.16	8.20	8.23	8.27	8.33	8.42
	Q	35℃	11.60	14.94	18.49	22.23	26.10	30.06	34.07	38.10	42.10	46.03	49.85	53.52
	P		6.49	6.82	7.07	7.26	7.40	7.50	7.57	7.63	7.69	7.76	7.85	7.97
	Q	30℃	11.78	15.36	19.15	23.11	27.20	31.39	35.62	39.86	44.06	48.19	52.21	
	P		5.90	6.24	6.51	6.72	6.88	7.01	7.11	7.20	7.29	7.39	7.51	
	Q	25℃	12.37	16.28	20.39	24.67	29.08	33.57	38.11	42.65	47.15	51.57		
	P		5.36	5.72	6.01	6.25	6.44	6.59	6.73	6.85	6.97	7.11		
	Q	20℃	13.60	17.93	22.45	27.14	31.95	36.85	41.78	46.71	51.60			
	P		4.82	5.21	5.53	5.80	6.02	6.21	6.38	6.54	6.70			
	Q	15℃	15.72	20.55	25.58	30.77	36.08	41.46	46.88	52.29				
	P		4.24	4.67	5.02	5.32	5.58	5.81	6.01	6.22				
	Q	10℃	18.95	24.38	30.01	35.79	41.68	47.64	53.64					
	P		3.58	4.04	4.43	4.77	5.07	5.34	5.59					
WW258HP-TFD-GV1	Q	65℃										50.09		
	P											16.17		
	Q	60℃		13.16	17.31	21.67	26.22	30.89	35.64	40.44	45.23	49.96	54.60	59.09
	P			13.57	13.81	13.97	14.06	14.11	14.12	14.10	14.07	14.04	14.02	14.03
	Q	55℃		14.86	18.77	22.89	27.18	31.60	36.09	40.62	45.14	49.60	53.95	58.16
	P			11.81	12.05	12.21	12.31	12.36	12.37	12.36	12.34	12.32	12.32	12.35
	Q	50℃	12.28	15.79	19.55	23.53	27.67	31.93	36.26	40.62	44.97	49.25	53.43	57.45
	P		10.06	10.39	10.63	10.80	10.90	10.96	10.98	10.98	10.98	10.97	10.99	11.04
	Q	45℃	12.73	16.20	19.92	23.85	27.94	32.15	36.42	40.71	44.99	49.19	53.29	57.22
	P		8.91	9.24	9.49	9.66	9.78	9.85	9.89	9.91	9.92	9.94	9.98	10.05
	Q	40℃	12.83	16.37	20.15	24.13	28.27	32.52	36.83	41.16	45.46	49.69	53.80	57.75
	P		7.97	8.31	8.57	8.76	8.89	8.98	9.04	9.08	9.12	9.16	9.23	9.34
	Q	35℃	12.85	16.55	20.49	24.63	28.91	33.31	37.76	42.22	46.65	51.00	55.24	59.30
	P		7.20	7.55	7.83	8.04	8.19	8.31	8.39	8.46	8.52	8.60	8.70	8.84
	Q	30℃	13.05	17.02	21.22	25.61	30.14	34.78	39.47	44.16	48.82	53.40	57.85	
	P		6.54	6.91	7.21	7.45	7.63	7.76	7.88	7.98	8.08	8.19	8.33	
	Q	25℃	13.71	18.03	22.59	27.34	32.22	37.20	42.22	47.25	52.24	57.14		
	P		5.94	6.34	6.66	6.93	7.14	7.31	7.45	7.59	7.73	7.88		
	Q	20℃	15.07	19.86	24.88	30.08	35.41	40.83	46.29	51.76	57.17			
	P		5.34	5.77	6.13	6.43	6.67	6.88	7.07	7.25	7.43			
	Q	15℃	17.42	22.77	28.34	34.09	39.97	45.94	51.94	57.94				
	P		4.70	5.17	5.56	5.90	6.18	6.43	6.66	6.89				
	Q	10℃	21.00	27.02	33.25	39.65	46.18	52.79	59.43					
	P		3.97	4.47	4.91	5.28	5.61	5.91	6.19					

注：冷凝器出口过冷度8. 3K, 过热度11. 1K

Note：Condenser Outlet Subcooling8.3K,Subheating 11.1K

制热量
Heating Capacity

WW — **R410A**

带喷气增焓 *EVI*

制热量 HEATING CAPACITY

型号Model	项目Item (KW)	Tc\Te	-35℃	-30℃	-25℃	-20℃	-15℃	-10℃	-5℃	0℃	5℃	10℃	15℃	20℃
WW286HP-TFD-GV1	Q	65℃										57.75		
	P											18.65		
	Q	60℃		15.17	19.96	24.99	30.23	35.62	41.10	46.63	52.15	57.61	62.96	68.14
	P			15.64	15.92	16.11	16.22	16.27	16.28	16.26	16.22	16.19	16.17	16.18
	Q	55℃		17.14	21.64	26.39	31.34	36.43	41.62	46.84	52.05	57.19	62.21	67.06
	P			13.62	13.90	14.08	14.20	14.25	14.27	14.25	14.23	14.21	14.21	14.24
	Q	50℃	14.16	18.20	22.54	27.13	31.90	36.82	41.81	46.84	51.85	56.79	61.61	66.24
	P		11.60	11.98	12.26	12.45	12.57	12.64	12.66	12.66	12.66	12.65	12.67	12.73
	Q	45℃	14.68	18.68	22.97	27.50	32.22	37.07	41.99	46.95	51.88	56.73	61.45	65.99
	P		10.27	10.65	10.94	11.14	11.28	11.36	11.40	11.42	11.44	11.46	11.51	11.59
	Q	40℃	14.79	18.87	23.23	27.83	32.60	37.49	42.47	47.46	52.42	57.30	62.04	66.59
	P		9.19	9.58	9.88	10.10	10.26	10.36	10.43	10.47	10.52	10.57	10.65	10.76
	Q	35℃	14.82	19.08	23.63	28.40	33.34	38.40	43.54	48.68	53.79	58.81	63.69	68.38
	P		8.30	8.71	9.03	9.27	9.45	9.58	9.67	9.75	9.83	9.91	10.03	10.19
	Q	30℃	15.05	19.62	24.47	29.53	34.76	40.10	45.51	50.92	56.30	61.58	66.71	
	P		7.54	7.97	8.32	8.59	8.79	8.95	9.08	9.20	9.31	9.44	9.60	
	Q	25℃	15.81	20.79	26.05	31.52	37.15	42.89	48.69	54.49	60.24	65.89		
	P		6.84	7.31	7.68	7.99	8.23	8.43	8.60	8.75	8.91	9.09		
	Q	20℃	17.38	22.90	28.69	34.68	40.83	47.08	53.38	59.68	65.93			
	P		6.16	6.66	7.07	7.41	7.69	7.93	8.15	8.35	8.56			
	Q	15℃	20.08	26.26	32.68	39.31	46.09	52.97	59.89	66.81				
	P		5.42	5.96	6.41	6.80	7.13	7.42	7.69	7.94				
	Q	10℃	24.22	31.16	38.34	45.73	53.25	60.87	68.53					
	P		4.57	5.16	5.66	6.09	6.47	6.82	7.14					
WW336HP-TFD-GV1	Q	65℃										67.72		
	P											21.87		
	Q	60℃		17.79	23.40	29.31	35.45	41.77	48.20	54.68	61.15	67.55	73.82	79.90
	P			18.34	18.67	18.89	19.02	19.08	19.09	19.06	19.02	18.98	18.96	18.98
	Q	55℃		20.09	25.38	30.95	36.75	42.72	48.80	54.92	61.03	67.06	72.95	78.64
	P			15.97	16.30	16.51	16.65	16.71	16.73	16.72	16.69	16.66	16.66	16.70
	Q	50℃	16.60	21.35	26.44	31.81	37.41	43.17	49.03	54.93	60.80	66.59	72.24	77.68
	P		13.61	14.05	14.37	14.60	14.74	14.82	14.85	14.85	14.84	14.84	14.86	14.93
	Q	45℃	17.21	21.90	26.94	32.25	37.78	43.46	49.24	55.05	60.83	66.52	72.05	77.37
	P		12.04	12.49	12.83	13.07	13.22	13.32	13.37	13.40	13.41	13.44	13.49	13.59
	Q	40℃	17.35	22.13	27.24	32.63	38.22	43.97	49.80	55.65	61.47	67.19	72.75	78.09
	P		10.78	11.24	11.59	11.85	12.03	12.15	12.23	12.28	12.33	12.39	12.48	12.62
	Q	35℃	17.38	22.38	27.71	33.30	39.10	45.03	51.05	57.09	63.08	68.96	74.69	80.18
	P		9.73	10.21	10.59	10.87	11.08	11.23	11.34	11.43	11.52	11.63	11.76	11.95
	Q	30℃	17.65	23.01	28.69	34.62	40.76	47.02	53.36	59.71	66.01	72.20	78.22	
	P		8.84	9.35	9.75	10.07	10.31	10.50	10.65	10.79	10.92	11.07	11.26	
	Q	25℃	18.53	24.38	30.55	36.96	43.56	50.29	57.09	63.89	70.64	77.26		
	P		8.03	8.57	9.01	9.36	9.65	9.88	10.08	10.26	10.45	10.66		
	Q	20℃	20.38	26.86	33.64	40.67	47.88	55.21	62.59	69.98	77.31			
	P		7.22	7.81	8.29	8.69	9.02	9.30	9.56	9.80	10.04			
	Q	15℃	23.55	30.79	38.32	46.10	54.05	62.11	70.23	78.34				
	P		6.36	6.99	7.52	7.97	8.36	8.70	9.01	9.31				
	Q	10℃	28.40	36.53	44.96	53.62	62.44	71.38	80.36					
	P		5.36	6.05	6.63	7.14	7.59	7.99	8.37					

注：冷凝器出口过冷度8. 3K, 过热度11. 1K

Note：Condenser Outlet Subcooling8.3K,Subheating 11.1K

R410A — **WW**

带喷气增焓 *EVI*

制热量
Heating Capacity

制热量 HEATING CAPACITY

型号Model	项目Item (KW)	Tc\Te	-35℃	-30℃	-25℃	-20℃	-15℃	-10℃	-5℃	0℃	5℃	10℃	15℃	20℃
WW430HP-TWD-GV1	Q	65℃										85.84		
	P											27.72		
	Q	60℃		22.56	29.66	37.15	44.93	52.94	61.09	69.31	77.52	85.63	93.58	101.28
	P			23.25	23.66	23.94	24.10	24.18	24.19	24.16	24.11	24.06	24.03	24.05
	Q	55℃		25.47	32.17	39.23	46.59	54.15	61.86	69.62	77.36	85.00	92.47	99.68
	P			20.25	20.66	20.93	21.10	21.18	21.21	21.19	21.15	21.12	21.12	21.17
	Q	50℃	21.04	27.06	33.51	40.32	47.42	54.72	62.15	69.63	77.07	84.41	91.57	98.46
	P		17.25	17.81	18.22	18.50	18.68	18.78	18.82	18.82	18.81	18.81	18.84	18.92
	Q	45℃	21.81	27.77	34.15	40.88	47.89	55.10	62.42	69.78	77.11	84.32	91.33	98.08
	P		15.27	15.84	16.26	16.56	16.76	16.88	16.95	16.98	17.00	17.04	17.10	17.23
	Q	40℃	21.99	28.05	34.53	41.36	48.45	55.73	63.12	70.54	77.92	85.17	92.22	98.98
	P		13.66	14.25	14.69	15.02	15.24	15.40	15.50	15.57	15.63	15.71	15.82	16.00
	Q	35℃	22.02	28.37	35.12	42.21	49.56	57.08	64.71	72.36	79.96	87.42	94.67	101.63
	P		12.33	12.95	13.42	13.78	14.04	14.24	14.38	14.49	14.61	14.74	14.91	15.14
	Q	30℃	22.37	29.17	36.37	43.89	51.66	59.61	67.64	75.69	83.68	91.52	99.15	
	P		11.20	11.85	12.36	12.76	13.07	13.31	13.50	13.67	13.84	14.03	14.27	
	Q	25℃	23.49	30.91	38.72	46.85	55.22	63.75	72.37	80.99	89.54	97.94		
	P		10.17	10.86	11.42	11.87	12.23	12.52	12.78	13.01	13.25	13.51		
	Q	20℃	25.83	34.04	42.64	51.55	60.69	69.98	79.34	88.71	97.99			
	P		9.16	9.90	10.51	11.01	11.43	11.79	12.11	12.42	12.73			
	Q	15℃	29.85	39.03	48.58	58.43	68.51	78.73	89.02	99.30				
	P		8.06	8.86	9.53	10.11	10.60	11.03	11.42	11.81				
	Q	10℃	36.00	46.31	56.99	67.97	79.15	90.48	101.86					
	P		6.80	7.66	8.41	9.05	9.62	10.13	10.61					
WW520HP-TWD-GV1	Q	65℃										106.06		
	P											34.24		
	Q	60℃		27.87	36.65	45.90	55.52	65.41	75.48	85.64	95.77	105.80	115.62	125.14
	P			28.73	29.24	29.58	29.78	29.88	29.89	29.85	29.79	29.73	29.69	29.72
	Q	55℃		31.47	39.74	48.47	57.56	66.91	76.43	86.02	95.58	105.03	114.25	123.16
	P			25.02	25.52	25.86	26.07	26.17	26.20	26.18	26.13	26.10	26.09	26.15
	Q	50℃	26.00	33.43	41.40	49.82	58.59	67.61	76.79	86.03	95.23	104.30	113.14	121.65
	P		21.31	22.00	22.51	22.86	23.08	23.21	23.25	23.26	23.24	23.24	23.28	23.38
	Q	45℃	26.95	34.31	42.19	50.51	59.17	68.07	77.12	86.22	95.27	104.18	112.85	121.18
	P		18.86	19.57	20.09	20.46	20.71	20.86	20.94	20.98	21.01	21.05	21.13	21.29
	Q	40℃	27.17	34.66	42.67	51.10	59.86	68.86	77.99	87.16	96.27	105.23	113.94	122.30
	P		16.88	17.60	18.15	18.55	18.84	19.02	19.15	19.23	19.31	19.41	19.55	19.77
	Q	35℃	27.21	35.05	43.39	52.15	61.23	70.53	79.95	89.40	98.79	108.01	116.97	125.57
	P		15.24	16.00	16.58	17.03	17.35	17.59	17.77	17.91	18.05	18.21	18.42	18.71
	Q	30℃	27.64	36.04	44.93	54.23	63.83	73.65	83.57	93.52	103.39	113.08	122.51	
	P		13.84	14.64	15.27	15.77	16.15	16.44	16.68	16.89	17.10	17.34	17.63	
	Q	25℃	29.03	38.19	47.84	57.89	68.23	78.77	89.41	100.07	110.63	121.01		
	P		12.57	13.42	14.11	14.66	15.11	15.47	15.79	16.07	16.37	16.69		
	Q	20℃	31.92	42.06	52.68	63.69	74.98	86.46	98.03	109.60	121.07			
	P		11.31	12.23	12.98	13.61	14.13	14.57	14.97	15.34	15.73			
	Q	15℃	36.88	48.22	60.02	72.20	84.65	97.28	109.99	122.69				
	P		9.96	10.95	11.78	12.49	13.09	13.62	14.11	14.59				
	Q	10℃	44.48	57.22	70.41	83.97	97.80	111.79	125.85					
	P		8.40	9.47	10.39	11.19	11.89	12.52	13.11					

注：冷凝器出口过冷度8. 3K, 过热度11. 1K

Note：Condenser Outlet Subcooling8.3K,Subheating 11.1K

WW24KM-WW61KM;WW24KF-WW61KF;WW28KP-WW81KP

不带喷气增焓W/O EVI

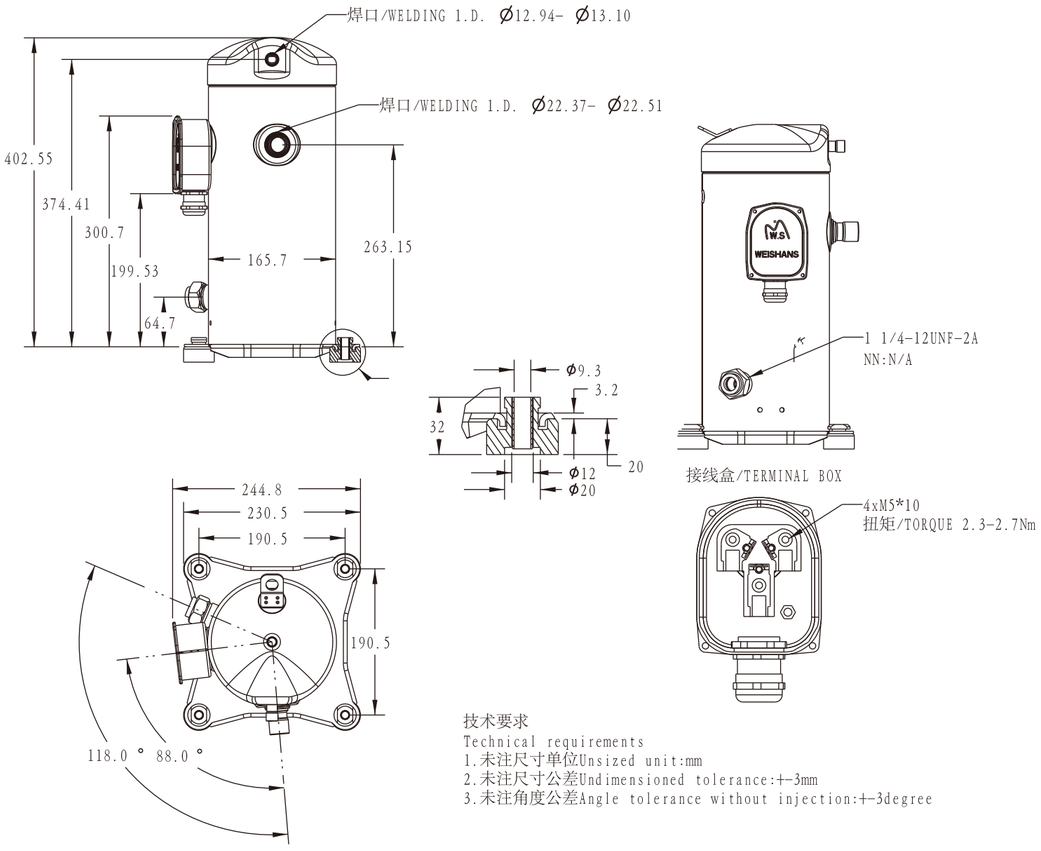

技术要求
Technical requirements
1.未注尺寸单位Unsized unit:mm
2.未注尺寸公差Undimensioned tolerance:+-3mm
3.未注角度公差Angle tolerance without injection:+-3degree

WW24KM-WW48KM;WW24KF-WW48KF;WW50HP-WW150HP

带喷气增焓机型EVI

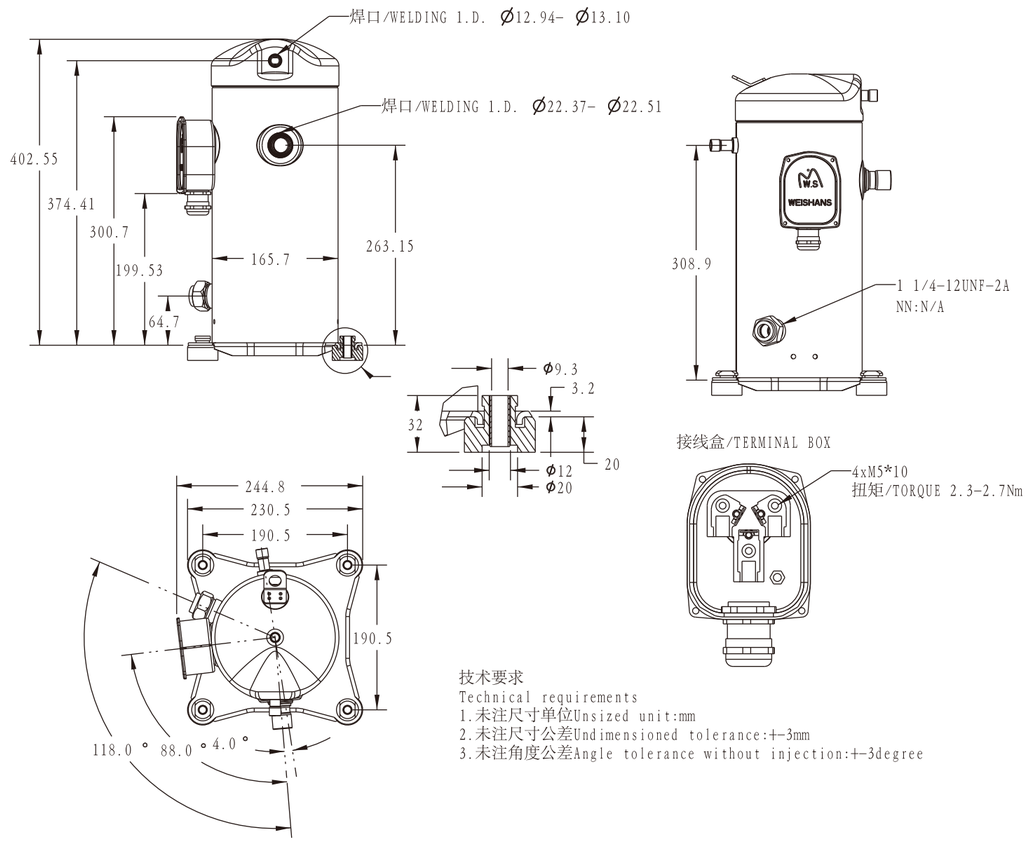

技术要求
Technical requirements
1.未注尺寸单位Unsized unit:mm
2.未注尺寸公差Undimensioned tolerance:+-3mm
3.未注角度公差Angle tolerance without injection:+-3degree

WW72KM-WW79KM;WW72KF-WW79KF;WW94KP-WW108KP

不带喷气增焓W/O EVI

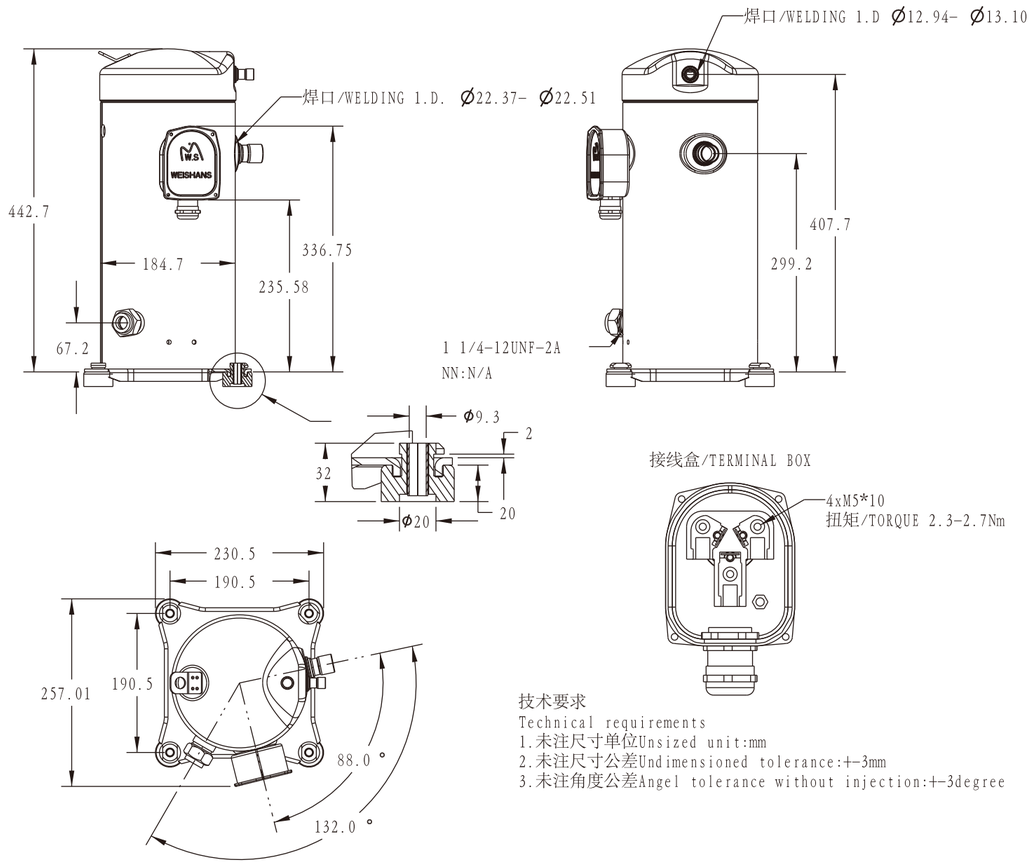

技术要求
Technical requirements
1.未注尺寸单位Unsized unit:mm
2.未注尺寸公差Undimensioned tolerance:+-3mm
3.未注角度公差Angel tolerance without injection:+-3degree

WW61KM-WW79KM;WW61KF-WW79KF;WW170HP-WW200HP

带喷气增焓机型EVI

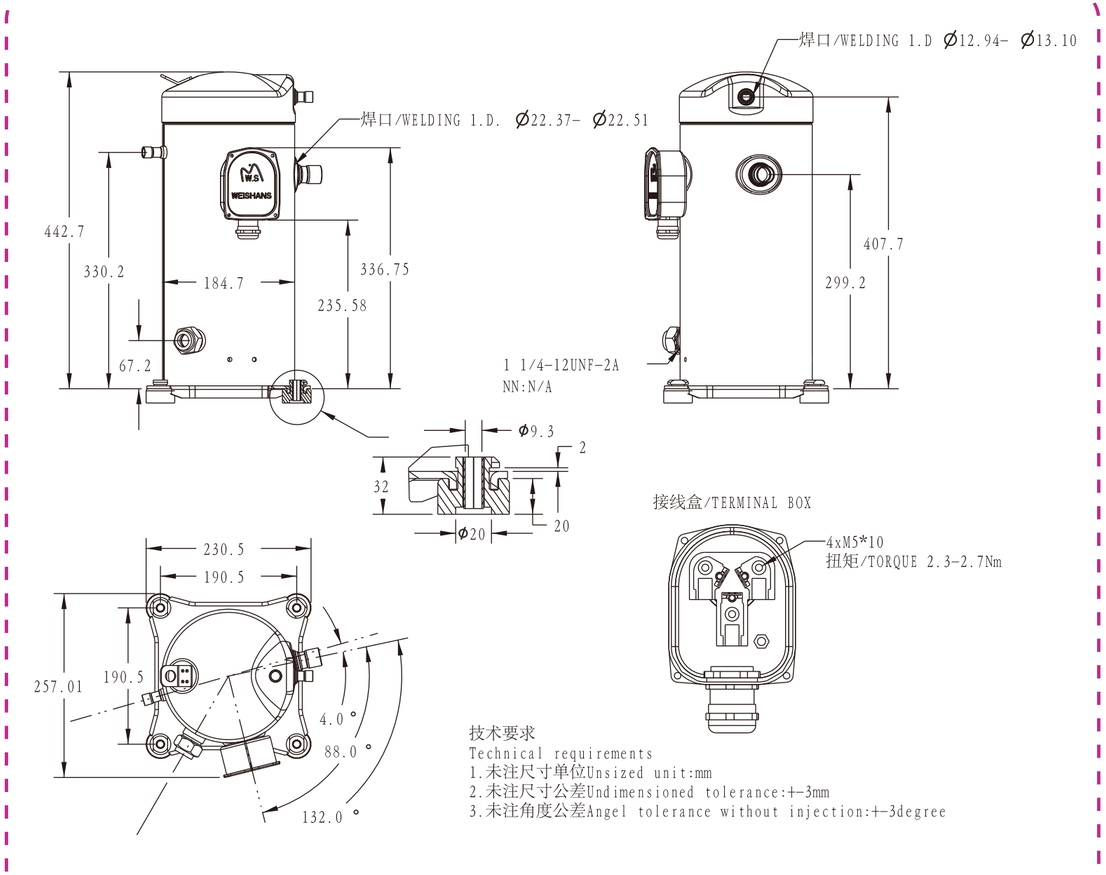

技术要求
Technical requirements
1.未注尺寸单位Unsized unit:mm
2.未注尺寸公差Undimensioned tolerance:+-3mm
3.未注角度公差Angel tolerance without injection:+-3degree

WW94KM-WW125KM;WW94KF-WW125KF;WW125KP-WW170KP

不带喷气增焓W/O EVI

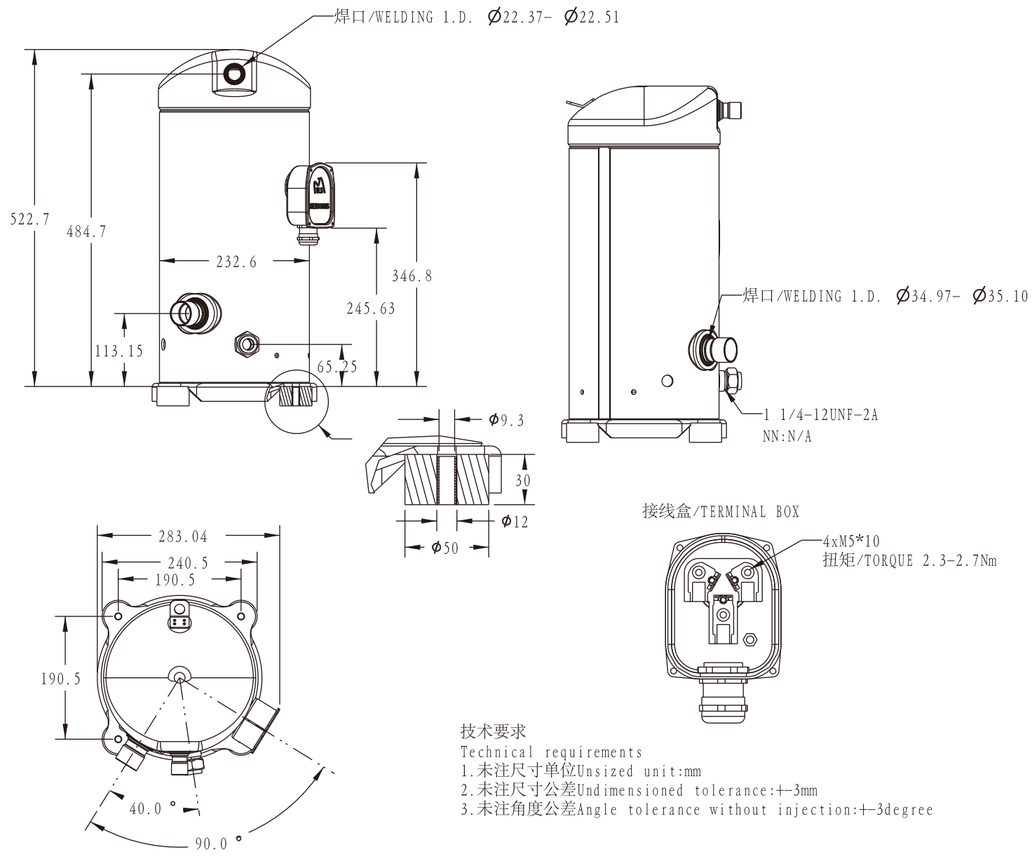

技术要求
Technical requirements
1.未注尺寸单位Unsized unit:mm
2.未注尺寸公差Undimensioned tolerance:+-3mm
3.未注角度公差Angle tolerance without injection:+-3degree

WW94KM-WW125KM;WW94KF-WW125KF;WW220HP-WW336HP

带喷气增焓机型EVI

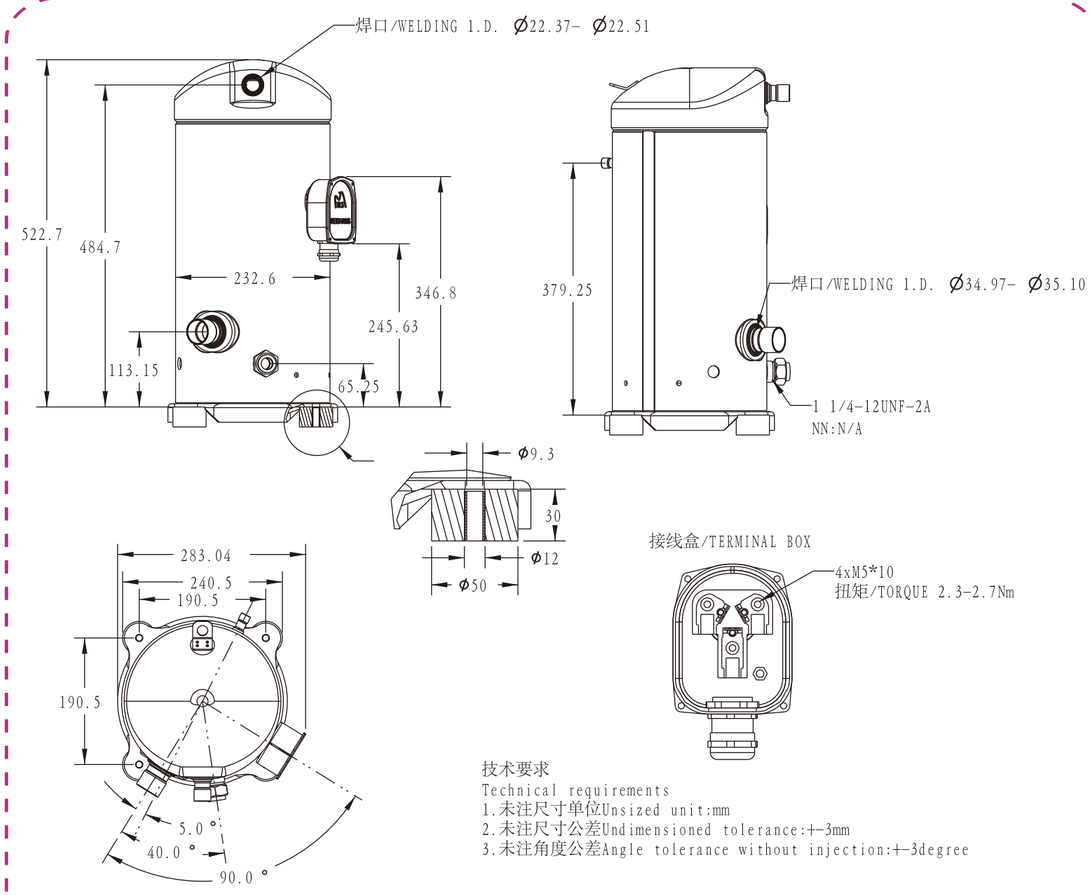

技术要求
Technical requirements
1.未注尺寸单位Unsized unit:mm
2.未注尺寸公差Undimensioned tolerance:+-3mm
3.未注角度公差Angle tolerance without injection:+-3degree

WW138KM-WW170KM;WW138KF-WW170KF;WW235KP

不带喷气增焓W/O EVI

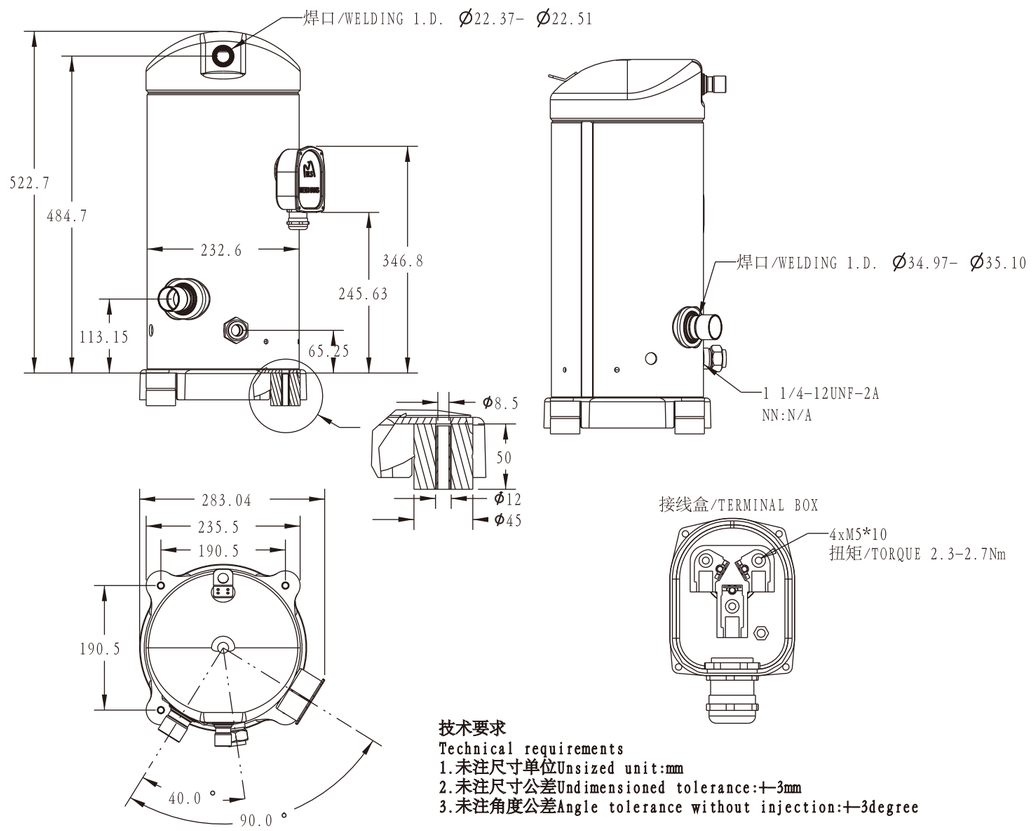

技术要求
Technical requirements
1.未注尺寸单位Unsized unit:mm
2.未注尺寸公差Undimensioned tolerance:+-3mm
3.未注角度公差Angle tolerance without injection:+-3degree

WW138KM-WW170KM;WW138KF-WW170KF;WW430HP

带喷气增焓机型EVI

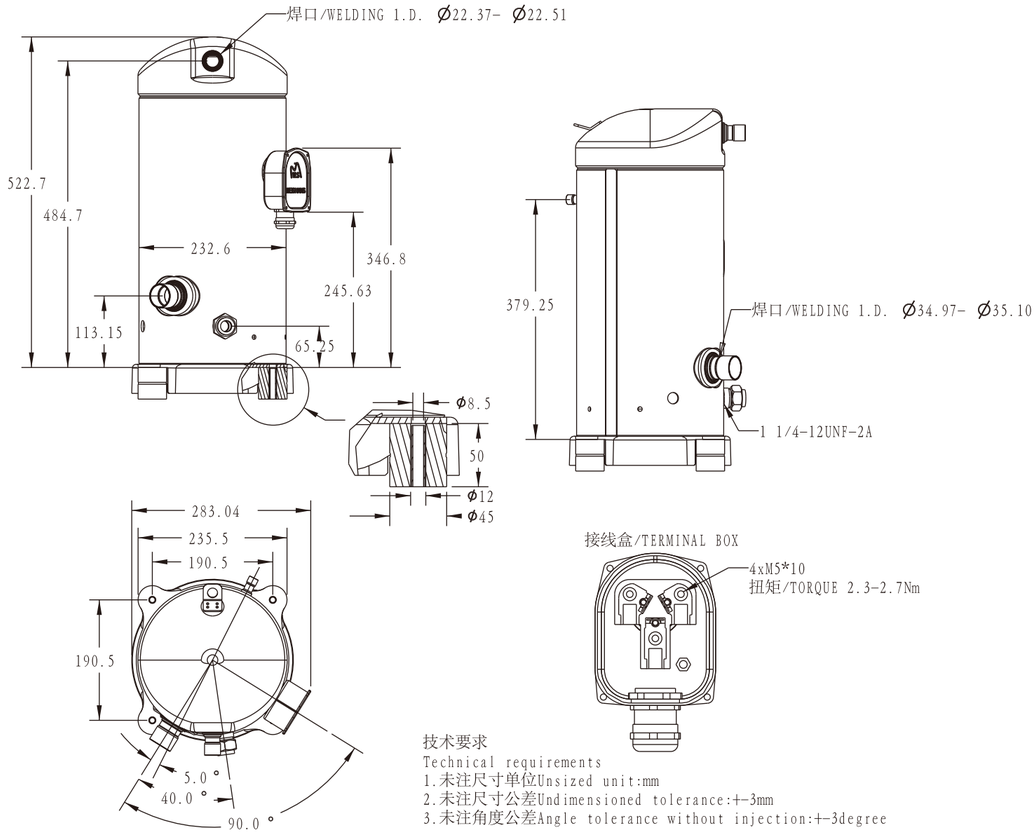

技术要求
Technical requirements
1.未注尺寸单位Unsized unit:mm
2.未注尺寸公差Undimensioned tolerance:+-3mm
3.未注角度公差Angle tolerance without injection:+-3degree

外形尺寸
Dimensional information

WW250KM-WW300KM;WW250KF-WW300KF;WW292KP

不带喷气增焓W/O EVI

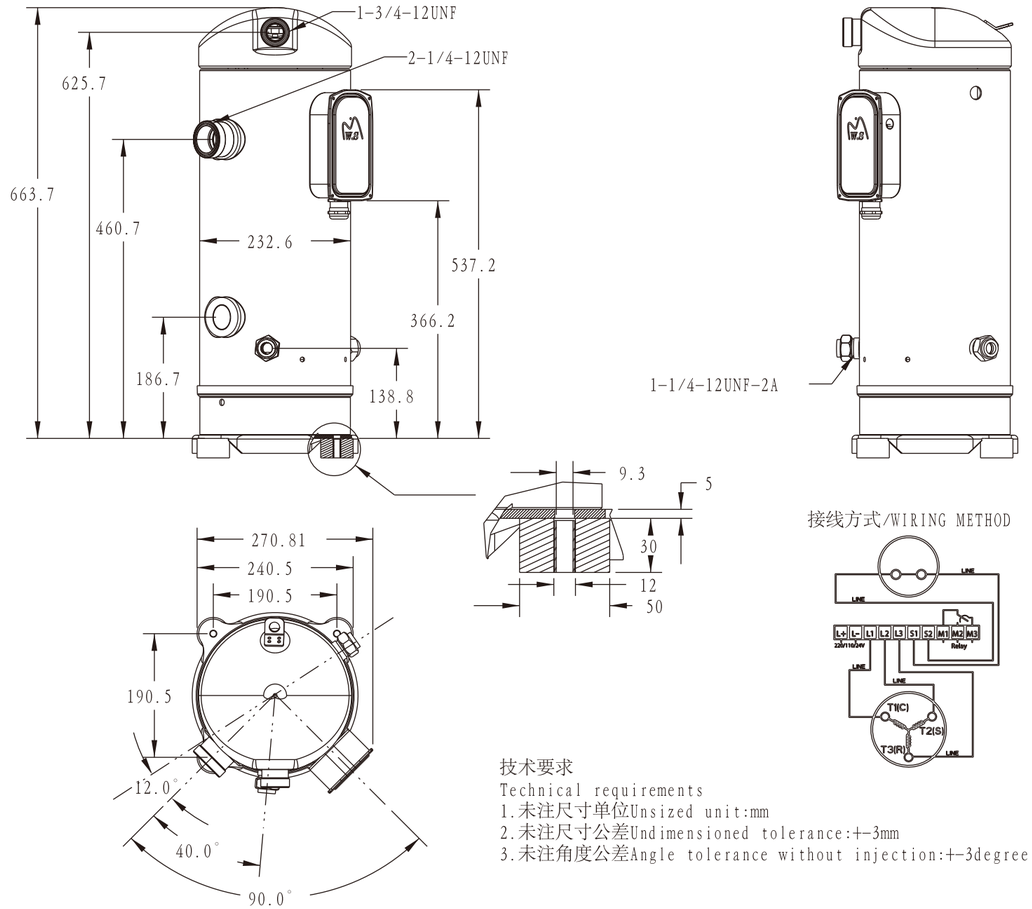

技术要求
Technical requirements
1.未注尺寸单位Unsized unit:mm
2.未注尺寸公差Undimensioned tolerance:+-3mm
3.未注角度公差Angle tolerance without injection:+-3degree

WW250KM-WW300KM;WW250KF-WW300KF;WW520HP

带喷气增焓机型EVI

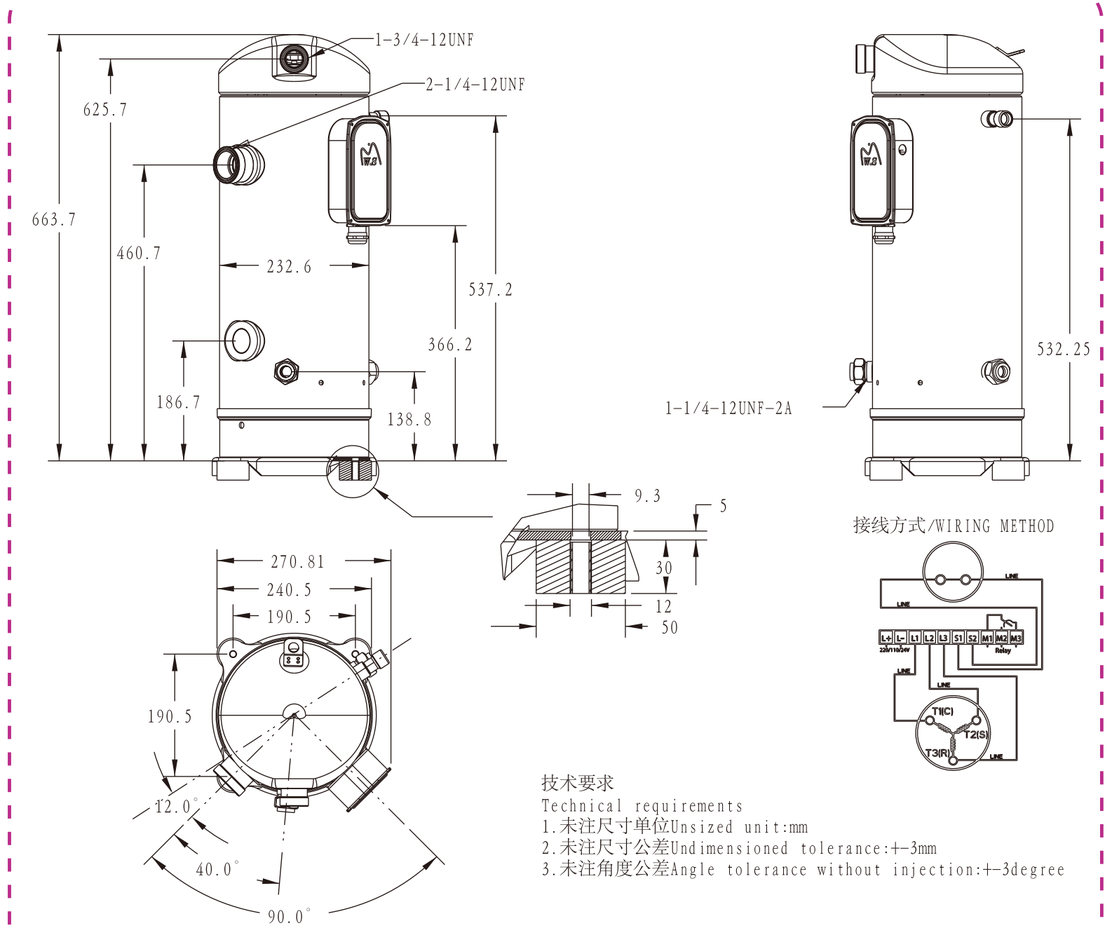

技术要求
Technical requirements
1.未注尺寸单位Unsized unit:mm
2.未注尺寸公差Undimensioned tolerance:+-3mm
3.未注角度公差Angle tolerance without injection:+-3degree

外形尺寸
Dimensional information

接线图

Wiring Diagram

WW250KM-WW300KM;WW250KF-WW300KF;WW292KP
EVI(WW250KE-WW300KE;WW250KF-WW300KF;WW520HP)

接线图 WIRING DIAGRAM

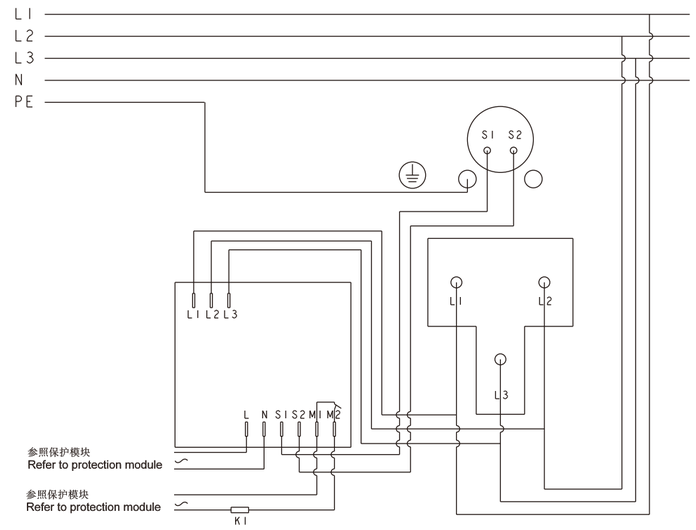

接线说明:
Wiring Instructions:

1.保护模块信号输入L1,L2,L3分别与压缩机的T型接头L1,L2,L3连接,压缩机的T型接头L1,L2,L3分别连接电源线的L1,L2,L3;
Protection module signal input L1,L2,L3 connect to compressor T connector L1,L2,L3,compressor T connector L1,L2,L3 connect to power line L1,L2,L3;
2.保护模块电源输入L,N连接指定的电源;
Protection module power input L,N connect to specified power supply;
3.保护模块信号输入S1,S2分别与压缩机的端子S1,S2连接;
Protection module signal input S1,S2 connect to compressor terminal S1,S2;
4.保护模块信号输出M1,M2与指定的电源,接触器K1连接;
Protection module signal output M1,M2 connect to specified power supply,contactor K1;
5.接地标志处的螺栓连接系统的PE端.
The bolt of grounding mark connect to system PE end.

保护模块闪现说明:
Protection Module Flashing Instructions:

1.绿灯亮起:设备操作;
Green light on:equipment operation;
2.绿灯闪烁:设备运转;
Green light flashing:equipment running;
3.红色/桔色闪烁:错误,设备中断;具体查看保护模块说明书.
Red/orange flashing:error,device interruption;
Please refer to the protection module manual for details.

为山® 涡旋压缩机

WEISHANS SCROLL COMPRESSOR

2HP-25HP

致力于为客户提供绿色环保的空调，冷水机，热泵及冷冻冷藏解决方案

We are committed to providing our customers with environmentally friendly air conditioning, chillers, heat pumps, and refrigeration solutions

WEISHANS
Climate Technologies
为山 · 涡旋压缩机