## 联系我们 / Contact Us

公司名称：苏州为山之环境技术有限公司

**Suzhou Weishans Climate Technologies Co.,Ltd**

公司官网 / **Web:www.weishans.com**

地址：江苏省苏州市相城区黄埭镇咏春科技园

Address：Yongchun Science and Technology Park, Huangdai Town, Xiangcheng District, Suzhou City, Jiangsu Province

联系人Contact：王先生Mr.Wang:13771888067，李先生Mr.Li:15995875226，陈女士Ms.Chen:13640429967，王先生Mr.Wang:18896534978



免责声明

技术数据在印刷前已经校对过，印刷之后有再更新的可能。如有对某一参数确认的需求，请联系苏州为山之环境技术有限公司。为山之对参数中可能存在的差错概不承担任何责任，为山之保留自行改变其产品而不预先通知的权利。

*Disclaimer*

*Our technical data have been checked before printing, but it is possible for data to be updated after printing. If you need to confirm a certain parameter, please contact Suzhou Weishans Climate Technology Co., Ltd. Weishans will not take any responsibilities for any possible errors in the parameters and reserve the right to change its products without prior notice.*



*Rev:202610*


WEISHANS
Climate Technologies
为山 · 涡旋压缩机

# 高能效涡旋压缩机

High Energy Efficiency Scroll Compressor

# 热泵烘干应用产品手册

Product Manual For Heat Pump & Stoving Application

低GWP版 *Low Global Warming Potential version*

## R515B

**苏州为山之环境技术有限公司**

Suzhou Weishans Climate Technologies Co.,Ltd

## 为山者

积土成山，事当有为不为

为山者，当以九仞为目标，坚韧前行

居谷不弃，据高无傲，以余力尽余志

为山者，当持仁心，聚仁人志士以作为

仁德宽厚，虚怀若谷，度己度人，度可度之人

为山者智而不乱智，谋而不全谋

为山者实为治军，将即将，身先士卒，令必行，士必勤勇，功当巨赏

为山者胜于人，乃心胜于人，非物胜于人也

为山者，虽积跬步箕土，乃成伟山

## *WEISHANS*

*To build mountain with small amounts of earth, You would select what to do and what not to do.*

*To be WEISHANS, You should have a high goal, go forward no matter what difficulty to meet,No give up when you low, No pride when you high, Do what you can do for the capable goal.*

*To be WEISHANS, You should have a heart like god, Collect kind and upright men to do something right, kind god feeling to others , mind breadth, sublime oneself and others ,and sublime the men who will sublime.*

*To be WEISHANS, should be smart but only smart on the right direction, and have astuteness on the right place.*

*To be WEISHANS, Just like build an army, General should be exactly like a leader with active and positive Behavior, order must have good result and active feedback, soldiers must be active to order and work hard, great reward for great job.*

*To be WEISHANS, They defeat others, They are so strong in mind not on the treasure.*

*To be WEISHANS, Even with small steps to reach peak , Even collect small earth to build great mountain.*

# 目录Catalog


公司简介 *About us* 01

关键技术及创新 *Characters and Advantages* 03

命名规则 *Nomenclature* 05

应用范围 *Application Range* 06

技术参数 *Specification* 07

制热量 *Heating Capacity* 11

外形尺寸 *Dimensional Information* 21

# 苏州为山之环境技术有限公司

苏州为山之环境技术有限公司成立于 2018 年 6 月，坐落于工业发达的历史名城苏州，专注于开发节能环保型压缩机，是一家创新型科技企业。为山之研发的涡旋式热泵压缩机核心技术已取得重大突破，并成功应用于多个领域，包括但不限于工业制冷、商用热水、工业蒸汽、农业烘干、制冷工程、精密空调、轨道交通制冷、转轮除湿及工业余热回收等。

公司研发的系列热泵蒸汽涡旋压缩机以及国内率先推出的防爆系列涡旋压缩机，显著拓展了涡旋压缩机的应用范围。公司自主研发的强力增焓技术也进一步扩大了压缩机的运行范围，使得在常温条件下使用同一工质实现高效蒸汽成为现实。

公司拥有先进的自动化生产线和高精度检测与加工设备，创新工艺流程，具备年产 10 万台涡旋压缩机的组装生产能力，产品覆盖从 2 匹至 25 匹。公司产品通过了 CCC、CE、CB、ROHS & REACH 和 ISO 9001 等多项国际认证。

公司高度重视知识产权保护，至今已申请 41 项知识产权，其中包括 13 项发明专利（5 项已获授权）、27 项实用新型专利（21 项已获授权）和 1 项软件著作权。公司荣获江苏省民营科技企业和国家级高新技术企业称号。

公司注重质量管理体系和信息化建设，秉持以人为本的理念，组建了一支具有竞争力的人才队伍，激发员工的积极性和创造力，不断提高运营效率。公司秉承创新、诚信的理念，致力于为客户创造更多价值，携手实现共赢。

展望未来，公司将继续加大研发投入，致力于为客户提供绿色环保的热泵及冷冻压缩机解决方案，以减少全球碳排放为使命，为构建绿色地球家园贡献力量。

www.weishans.com

# *Suzhou Weishans Climate Technologies Co., Ltd*

*Suzhou Weishans Climate Technology Co., Ltd was established in June 2018, it is located in Suzhou with developed industry and long history city, and focuses on the development of energy-saving and environment protection compressors. It is an innovative technology enterprise. The core technology of the scroll heat pump compressors developed by Weishans has made significant breakthroughs and has been successfully applied in multiple fields, including but not limited to industrial refrigeration, commercial hot water, industrial steam, agricultural drying, refrigeration engineering, precision air conditioning, rail transit refrigeration, rotary wheel dehumidification and industrial waste heat recovery, etc.*

*The series of heat pump steam scroll compressors developed by the company and the explosion-proof series of scroll compressors first launched in China have significantly expanded the application range of scroll compressors. The company's independently developed strong enthalpy increase technology has also further expanded the operating range of the compressor, making it possible to achieve efficient steam using the same working fluid under normal temperature conditions.*

*The company owns advanced automated production lines and high-precision testing and machining equipments, innovated technological process, and has an annual assembly production capacity of 100,000 scroll compressors, with products covering the range from 2HP to 25HP. The company's products have passed multiple international certifications including CCC, CE, CB, ROHS & REACH and ISO 9001.*

*The company attaches great importance to the protection of intellectual property rights and has applied for 41 intellectual property rights so far, including 13 invention patents (5 have been authorized), 27 utility model patents (21 have been authorized) and 1 software copyright. The company has been awarded the titles of Jiangsu Private Technology Enterprise and National High-tech Enterprise.*

*The company attaches great importance to the quality management system and information construction, adheres to the people-oriented concept, and has formed a competitive talent team to stimulate the enthusiasm and creativity of employees and continuously improve operational efficiency. The company adheres to the concepts of innovation and integrity, and is committed to creating more value for customers and achieving win-win results together.*

*Looking forward to the future, the company will continue to increase investment in research and development, and is committed to providing customers with green and environmentally heat pump and refrigeration compressor solutions. With the mission of reducing global carbon emissions, it will contribute to building a green Earth home.*

公司简介 ABOUT US

OUR VISION

## 企业愿景

为山之遵循“求精不求巧，求本不求华”的产品理念，把“为山”打造成国内外知名品牌。

WE AIM TO MAKE “WEISHAN” THE FIRST-CLASS INTERNATIONAL BRAND. WE ALWAYS FOLLOW THE THINKING “TO ACHIEVE PERFECTION WITHOUT INGENUITY, SEEKING FOR ORIGIN WITHOUT REFINEMENT.”

OUR MISSION

## 企业使命

以“九仞”为目标，坚韧前行；居谷不弃，据高无傲！

“JIUREN” IS OUR AIM. WE WILL MOVE FORWARD TOUGHLY. WE WILL NEVER GIVE UP EVEN IN DOWNS AND NEVER BE ARROGANT WHEN IN UPS.

SERVICE AIM

## 服务宗旨

顾客第一、品质第一、服务第一、持续改进、回报社会

CUSTOMERS FIRST, QUALITY FIRST, SERVICE FIRST,KEEPING IMPROVING, REPAYING SOCIETY

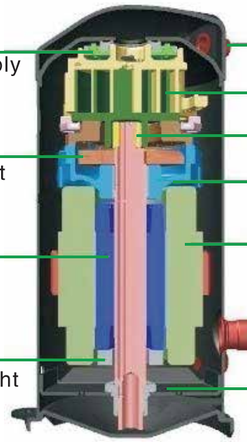


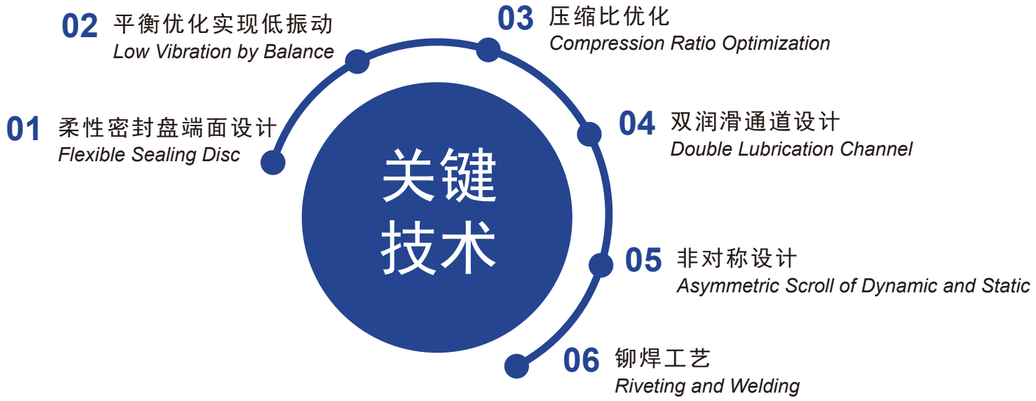




关键技术及创新
Characters and Advantages

关键技术及创新 CHARACTERS AND ADVANTAGES

## “为山”牌涡旋压缩机性能优良，突出的特点有：

1. 国产替代：拥有自主知识产权，且与国外知名企业的同等技术水平的产品具有良好的互换性。
2. 重点开发的中高功率范围12匹及以上的全封闭压缩机新产品，获得良好的市场应用口碑。
3. 针对不同的冷媒设计多种涡旋盘，适用范围广，WW系列压缩机在烘干机组上冷凝温度最高可达85摄氏度。
4. 能效比高，入围北极熊创新产品奖前三甲，是节能机组产品。

*"Weishan" brand scroll compressors have excellent performance, and the outstanding features are as below:*

*1. Localization substitution: independent intellectual property rights; good interchangeability with products of the same technical level as well-known foreign companies.*

*2. Stress-developed ≥12HP hermetic compressors in the medium and high power range and get good market application reputation.*

*3. The products are designed with multiple scrolls for different refrigerants and have a wide application range. The condensing temperature of WW series can reach 85℃ on the drying unit.*

*4. The products have high energy efficiency ratio are selected in the top three of the Polar Bear Innovative Product Award and are the energy-saving units.*

为山之的涡旋压缩机为热泵，空调，冷水机及冷冻冷藏等应用提供了出众的解决方案，涡旋压缩机是高可靠性，高能效比，紧凑性系统设计的理想选择。为山系列涡旋压缩机可提供2~25HP的产品，其适用的制冷剂包括R410A, R22, R407C, R134a等

*Weishans'scroll compression technology provide an outstanding solution for Heat pump, air conditioner, chiller and refrigeration applicaiton. Scroll compressors are an ideal choice with high reliability, high EER and compact system design. The scroll compressors of Weishan series can provide 2HP~25HP products, the applicable refrigerants include R410A, R22,R407C, R134a ETC.*

本样本所列压缩机制冷量数据，电源频率50Hz（电机同步转速2900rpm）。当压缩机在60Hz频率（电机转速3500rpm）运行时，制冷量以及输入功率相应约增加20%。压缩机不宜在应用范围外使用。

*The capacity data of scroll compressors listed in this catalogue, power frequency is 50 Hz (Synchronous speed of motor 2900 rpm). When the compressors are operated with 60Hz (the speed of motor 3500 rpm), the capacity and input power are correspondingly increased about 20%. The compressors should not be used beyond the application range.*

*Cooling capacity data of compressor listed in this sample, power frequency: 50Hz(synchronous motor speed: 2900rpm*

# 命名规则

## Nomenclature

命名规则 NOMENCLATURE

压缩机标称能力代码
通常（不包括R410A喷气机型）
表示在60Hz，ARI工况下制冷量，
单位：Btu/Hr
仅R410A喷气增焓机型
表示在50Hz，-20/55℃工况下制热量，
单位：W

润滑方式代码
M-矿物油R22
E-32#POE/R404A/R407C
F-68#POE/R134等
P-32#POE/R410A
B-120#POE/R142b/
R245fa/R1233zd/R515B等
R-68#POE/R32

电源代码
P-380V 50Hz
T-380V 60Hz
J-220-240V 50Hz
D-460V-3 60Hz/380-420V-3 50Hz
V-220V-1 50Hz/208-230V-1 60Hz
5-200-220V-3 50Hz/200-230V-3 60Hz

连接代码
N-无视液镜；焊接口
G-有视液镜；焊接口
S-有视液镜；螺纹口

压缩机家族序列代码
R-空调
B-中温冷藏应用
W-热泵热水应用
F-低温冷冻应用
H-特种高温应用

能力系数代码
H*100
K*1000
M*10000

电机相数代码
T-三相
P-单相

冷却方式
N-无配置
V-喷气增焓
L-喷液
X-喷气+喷液

电机保护方式代码
F-内置保护器
W-外置保护器
X-无电机保护器

配置代码
1-标准配置
2-车载空调系列
3，4-客户特殊定制系列
X-配置可燃冷媒，如R290等

系列代码
W-为山系列

**WW 160 K B - T F D - G N 1**

R410A喷气增焓机型R410A with EVI:

**WW 286 H P - T F D - G V 1**

*Series Code*
*W-Weishan Series*

*Compressor Family Series*
*R-Air Conditioning*
*B-Medium Temperature Refrigeration*
*W-Heat Pump for Heating Water*
*F-Low Temperature Freezing*
*H- Special High Temperature*

*Compressor Nominal Capability Code*
*Usually (eccluding R410A with EVI model)*
*ARI Operating at 60Hz, Unit:Btu/Hr*
*R410A with EVI :*
*Nominal Capabilityat 50Hz，-20/55℃，*
*Unit:W*

*Capacity Multiplier*
*H*100*
*K*1000*
*M*10000*

*Lubrication Oil*
*M-R22 Mineral Oil*
*E-32#POE/R404A/R407C*
*F-68#POE/R134,etc*
*P-32#POE/R410A*
*B-120#POE/R142b/*
*R245fa/R1233zd/R515B,etc*
*R-68#POE/R32*

*Motor Protection*
*F-Internal Protector*
*W-External Protector*
*X-None*

*Motor Phase*
*T-Three Phase*
*P-Single Phase*

*Power*
*P-380V 50Hz*
*T-380V 60Hz*
*J-220-240V-1 50Hz*
*D-460V-3 60Hz/380-420V-3 50Hz*
*V-220V-1 50Hz/208-230V-1 60Hz*
*5-200-220V-3 50Hz/200-230V-3 60Hz*

*Model Code*
*1-Standard Configuration*
*2-Automotive A/C Series*
*3,4-Customized Client Series*
*X-For flammable refrigerants，*
*Such as R290*

*Cooling Model*
*N-None*
*V-Vapor Injection*
*L-Liquid Injection*
*X-Vapor+Liquid Injection*

*Fitting Connection Code*
*N-None and Welding Joint*
*G-Sight Glasses and Welding Joint*
*S-Sight Glasses and Solenoid Joint*



# 应用范围

## Application Range

应用范围 APPLICATION RANGE

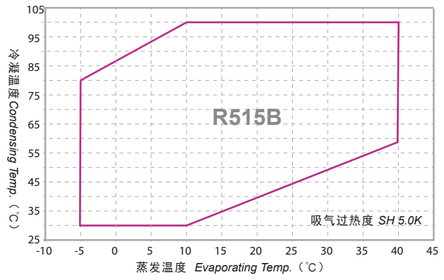


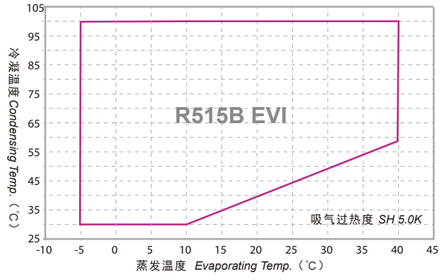

# 技术参数
## Specifications

技术参数 SPECIFICATIONS

**WW** — **R515B**

不带喷气增焓 *W/O EVI*

| 型号 Model | | WW70KB-TFD-GN1 | WW120KB-TFD-GN1 | WW160KB-TFD-GN1 | WW190KB-TFD-GN1 | WW240KB-TFD-GN1 |
|---|---|---|---|---|---|---|
| 电制 Motor Power | | 380-420V/3~/50Hz or 460V/3~/60Hz | | | | |
| 名义功率 Nominal Power (HP) | | 3 | 5 | 7 | 8 | 10 |
| 排量 Displacement (cc/Rev) | | 50.6 | 84.5 | 108 | 127 | 166.1 |
| 制冷剂 Refrigerant | | R515B | | | | |
| 名义制热量 Nominal Capacity (W) | | 5190 | 8406 | 10744 | 12634 | 16524 |
| 名义输入功率 Nominal Power (W) | | 1394 | 2258 | 2885 | 3393 | 4438 |
| 名义工况能效比 COP (W/W) | | 3.72 | 3.72 | 3.72 | 3.72 | 3.72 |
| 名义工况电流 Nominal Operating Current (A) | | 3.2 | 5.2 | 6.6 | 7.8 | 10.2 |
| 堵转电流 LRA (A) | | 59.3 | 83.6 | 103.4 | 117 | 117 |
| 最大运行电流 MOC (A) | | 6.3 | 10.3 | 13.1 | 15.4 | 20.2 |
| 曲轴箱加热器功率 Crankcase Heater (W) | | 70 | | 90 | | |
| 接管尺寸 Fitting ID Size (mm) | 排气管 Dis. Tube | 12.94-13.10 | | | 22.37-22.51 | |
| | 吸气管 Suc. Tube | 22.37-22.51 | | | 34.97-35.10 | |
| 外形尺寸 Dimension (mm) | 长(L) | 244.8 | 257.01 | | 283.04 | |
| | 宽(W) | 230.5 | 230.5 | | 240.5 | |
| | 高(H) | 402.55 | 442.7 | | 522.7 | |
| 底脚安装尺寸 Mounting Dimensions（mm） | | 190.5x190.5 | | | | |
| 润滑油类型 Lubrication Oil | | POE | | | | |
| 润滑油初次充注量 Lubrication Oil Initial Charge (L) | | 1.4 | 1.8 | 1.8 | 3 | 3 |
| 润滑油重新充注量 Lubrication Oil Recharge (L) | | 1.2 | 1.6 | 1.6 | 2.8 | 2.8 |
| 最大工作压力 Maxium Operating Pressure (MPa) | 高压侧 High Pressure Side | 3 | | | | |
| | 低压侧 Low Pressure Side | 2 | | | | |
| 重量 Weight (kg) | | 28 | 38 | 38 | 66 | 66 |

注：蒸发5. 0˚C, 冷凝55. 0˚C, 过热5. 0K, 过冷5. 0K, 环温35. 0˚C。
Note: Evaporating Temperature 5.0˚C, Condensing Temperating 55.0˚C, Superheating 5.0K, Subcooling 5.0K, Ambient Temperating 35.0˚C.



**R515B** — **WW**

不带喷气增焓 *W/O EVI*

# 技术参数
## Specifications

技术参数 SPECIFICATIONS

| 型号 Model | | WW280KB-TFD-GN1 | WW360KB-TFD-GN1 | WW470KB-TWD-GN1 | WW600KB-TWD-GN1 |
|---|---|---|---|---|---|
| 电制 Motor Power | | 380-420V/3~/50Hz or 460V/3~/60Hz | | | |
| 名义功率 Nominal Power (HP) | | 12 | 15 | 20 | 25 |
| 排量 Displacement (cc/Rev) | | 190.8 | 248.9 | 325 | 400 |
| 制冷剂 Refrigerant | | R515B | | | |
| 名义制热量 Nominal Capacity (W) | | 18982 | 24762 | 32332 | 39794 |
| 名义输入功率 Nominal Power (W) | | 5097 | 6650 | 8683 | 10686 |
| 名义工况能效比 COP (W/W) | | 3.72 | 3.72 | 3.72 | 3.72 |
| 名义工况电流 Nominal Operating Current (A) | | 11.7 | 15.2 | 19.9 | 24.5 |
| 堵转电流 LRA (A) | | 117 | 117 | 304 | 304 |
| 最大运行电流 MOC (A) | | 23.2 | 30.3 | 43.4 | 53.3 |
| 曲轴箱加热器功率 Crankcase Heater (W) | | 90 | | | |
| 接管尺寸 Fitting ID Size (mm) | 排气管 Dis. Tube | 22.37-22.51 | | 28.81-28.95 | |
| | 吸气管 Suc. Tube | 34.97-35.10 | | 34.97-35.10 | |
| 外形尺寸 Dimension (mm) | 长(L) | 283.04 | | 270.81 | |
| | 宽(W) | 235.5 | | 240.5 | |
| | 高(H) | 522.7 | | 663.7 | |
| 底脚安装尺寸 Mounting Dimensions（mm） | | 190.5x190.5 | | | |
| 润滑油类型 Lubrication Oil | | POE | | | |
| 润滑油初次充注量 Lubrication Oil Initial Charge (L) | | 3.2 | 3.2 | 5 | 5 |
| 润滑油重新充注量 Lubrication Oil Recharge (L) | | 3 | 3 | 4.8 | 4.8 |
| 最大工作压力 Maxium Operating Pressure (MPa) | 高压侧 High Pressure Side | 3 | | | |
| | 低压侧 Low Pressure Side | 2 | | | |
| 重量 Weight (kg) | | 66 | 66 | 92 | 92 |

注：蒸发5. 0˚C, 冷凝55. 0˚C, 过热5. 0K, 过冷5. 0K, 环温35. 0˚C。
Note: Evaporating Temperature 5.0˚C, Condensing Temperating 55.0˚C, Superheating 5.0K, Subcooling 5.0K, Ambient Temperating 35.0˚C.

# 技术参数
## Specifications

技术参数 SPECIFICATIONS

**WW** R515B

带喷气增焓 *EVI*

| 型号 Model | | WW70KB-TFD-GV1 | WW120KB-TFD-GV1 | WW160KB-TFD-GV1 | WW190KB-TFD-GV1 | WW240KB-TFD-GV1 |
|---|---|---|---|---|---|---|
| 电制 Motor Power | | 380-420V/3~/50Hz or 460V/3~/60Hz | | | | |
| 名义功率 Nominal Power (HP) | | 3 | 5 | 7 | 8 | 10 |
| 排量 Displacement (cc/Rev) | | 50.6 | 84.5 | 108 | 127 | 166.1 |
| 制冷剂 Refrigerant | | R515B | | | | |
| 名义制热量 Nominal Capacity (W) | | 6138 | 9452 | 12080 | 14103 | 18846 |
| 名义输入功率 Nominal Power (W) | | 1492 | 2495 | 3189 | 3729 | 4877 |
| 名义工况能效比 COP (W/W) | | 4.11 | 3.79 | 3.79 | 3.79 | 3.79 |
| 名义工况电流 Nominal Operating Current (A) | | 3.1 | 5.1 | 6.5 | 7.6 | 10.0 |
| 堵转电流 LRA (A) | | 59.3 | 83.6 | 103.4 | 117 | 117 |
| 最大运行电流 MOC (A) | | 6.3 | 10.3 | 13.1 | 15.4 | 20.2 |
| 曲轴箱加热器功率 Crankcase Heater (W) | | 70 | | 90 | | |
| 接管尺寸 Fitting ID Size (mm) | 排气管 Dis. Tube | 12.94-13.10 | | | 22.37-22.51 | |
| | 吸气管 Suc. Tube | 22.37-22.51 | | | 34.97-35.10 | |
| 外形尺寸 Dimension (mm) | 长(L) | 244.4 | 233.63 | | 283.04 | |
| | 宽(W) | 230.5 | 230.5 | | 240.5 | |
| | 高(H) | 403.4 | 442.7 | | 522.7 | |
| 底脚安装尺寸 Mounting Dimensions（mm） | | 190.5x190.5 | | | | |
| 润滑油类型 Lubrication Oil | | POE | | | | |
| 润滑油初次充注量 Lubrication Oil Initial Charge (L) | | 1.4 | 1.8 | 1.8 | 3 | 3 |
| 润滑油重新充注量 Lubrication Oil Recharge (L) | | 1.2 | 1.6 | 1.6 | 2.8 | 2.8 |
| 最大工作压力 Maxium Operating Pressure (MPa) | 高压侧 High Pressure Side | 3 | | | | |
| | 低压侧 Low Pressure Side | 2 | | | | |
| 重量 Weight (kg) | | 28 | 38 | 38 | 66 | 66 |

注：蒸发5. 0˚C, 冷凝55. 0˚C, 过热5. 0K, 过冷5. 0K, 环温35. 0˚C，EVI打开

Note: Evaporating Temperature 5.0˚C, Condensing Temperating 55.0˚C, Superheating 5.0K, Subcooling 5.0K, Ambient Temperating 35.0˚C，EVI open



**WW** R515B

带喷气增焓 *EVI*

# 技术参数
## Specifications

技术参数 SPECIFICATIONS

| 型号 Model | | WW280KB-TFD-GV1 | WW360KB-TFD-GV1 | WW470KB-TWD-GV1 | WW600KB-TWD-GV1 |
|---|---|---|---|---|---|
| 电制 Motor Power | | 380-420V/3~/50Hz or 460V/3~/60Hz | | | |
| 名义功率 Nominal Power (HP) | | 12 | 15 | 20 | 25 |
| 排量 Displacement (cc/Rev) | | 190.8 | 248.9 | 325 | 400 |
| 制冷剂 Refrigerant | | R515B | | | |
| 名义制热量 Nominal Capacity (W) | | 21189 | 27641 | 36092 | 44420 |
| 名义输入功率 Nominal Power (W) | | 5602 | 7308 | 9542 | 11744 |
| 名义工况能效比 COP (W/W) | | 3.79 | 3.78 | 3.78 | 3.78 |
| 名义工况电流 Nominal Operating Current (A) | | 11.5 | 15.0 | 21.5 | 26.4 |
| 堵转电流 LRA (A) | | 117 | 117 | 304 | 304 |
| 最大运行电流 MOC (A) | | 23.2 | 30.3 | 43.4 | 53.3 |
| 曲轴箱加热器功率 Crankcase Heater (W) | | 90 | | | |
| 接管尺寸 Fitting ID Size (mm) | 排气管 Dis. Tube | 22.37-22.51 | | 28.81-28.95 | |
| | 吸气管 Suc. Tube | 34.97-35.10 | | 34.97-35.10 | |
| 外形尺寸 Dimension (mm) | 长(L) | 283.04 | | 270.81 | |
| | 宽(W) | 235.5 | | 240.5 | |
| | 高(H) | 522.7 | | 663.7 | |
| 底脚安装尺寸 Mounting Dimensions（mm） | | 190.5x190.5 | | | |
| 润滑油类型 Lubrication Oil | | POE | | | |
| 润滑油初次充注量 Lubrication Oil Initial Charge (L) | | 3.2 | 3.2 | 5 | 5 |
| 润滑油重新充注量 Lubrication Oil Recharge (L) | | 3 | 3 | 4.8 | 4.8 |
| 最大工作压力 Maxium Operating Pressure (MPa) | 高压侧 High Pressure Side | 3 | | | |
| | 低压侧 Low Pressure Side | 2 | | | |
| 重量 Weight (kg) | | 66 | 66 | 92 | 92 |

注：蒸发5. 0˚C, 冷凝55. 0˚C, 过热5. 0K, 过冷5. 0K, 环温35. 0˚C，EVI打开

Note: Evaporating Temperature 5.0˚C, Condensing Temperating 55.0˚C, Superheating 5.0K, Subcooling 5.0K, Ambient Temperating 35.0˚C，EVI open

# 制热量
## Heating Capacity

制热量 HEATING CAPACITY

**WW** — **R515B**

不带喷气增焓 *W/O EVI*

| 型号 Model | 项目 Item (KW) | Tc\Te | -5℃ | 0℃ | 5℃ | 10℃ | 15℃ | 20℃ | 25℃ | 30℃ | 35℃ | 40℃ |
|---|---|---|---|---|---|---|---|---|---|---|---|---|
| WW70KB-TFD-GN1 | Q | 100℃ | | | | 4.62 | 5.13 | 5.75 | 6.48 | 7.34 | 8.36 | 9.55 |
| | P | | | | | 3.02 | 3.07 | 3.11 | 3.14 | 3.17 | 3.20 | 3.23 |
| | Q | 95℃ | | | | 4.74 | 5.32 | 6.01 | 6.82 | 7.77 | 8.89 | 10.18 |
| | P | | | | | 2.78 | 2.82 | 2.86 | 2.89 | 2.92 | 2.95 | 2.97 |
| | Q | 90℃ | | | 4.33 | 4.88 | 5.52 | 6.28 | 7.17 | 8.21 | 9.42 | 10.82 |
| | P | | | | 2.51 | 2.56 | 2.60 | 2.63 | 2.66 | 2.69 | 2.71 | 2.74 |
| | Q | 85℃ | | 3.90 | 4.42 | 5.03 | 5.73 | 6.56 | 7.53 | 8.66 | 9.96 | 11.47 |
| | P | | | 2.27 | 2.31 | 2.35 | 2.39 | 2.42 | 2.44 | 2.47 | 2.49 | 2.52 |
| | Q | 80℃ | 3.46 | 3.96 | 4.53 | 5.19 | 5.95 | 6.85 | 7.90 | 9.11 | 10.51 | 12.12 |
| | P | | 2.03 | 2.08 | 2.13 | 2.16 | 2.19 | 2.22 | 2.25 | 2.27 | 2.29 | 2.32 |
| | Q | 75℃ | 3.50 | 4.03 | 4.64 | 5.35 | 6.18 | 7.15 | 8.27 | 9.57 | 11.06 | 12.77 |
| | P | | 1.87 | 1.92 | 1.95 | 1.99 | 2.01 | 2.04 | 2.06 | 2.09 | 2.11 | 2.14 |
| | Q | 70℃ | 3.55 | 4.12 | 4.77 | 5.53 | 6.42 | 7.45 | 8.65 | 10.03 | 11.61 | 13.42 |
| | P | | 1.72 | 1.76 | 1.80 | 1.82 | 1.85 | 1.87 | 1.90 | 1.92 | 1.95 | 1.98 |
| | Q | 65℃ | 3.61 | 4.21 | 4.90 | 5.71 | 6.66 | 7.76 | 9.03 | 10.49 | 12.16 | 14.07 |
| | P | | 1.58 | 1.62 | 1.65 | 1.68 | 1.70 | 1.72 | 1.75 | 1.77 | 1.80 | 1.83 |
| | Q | 60℃ | 3.68 | 4.31 | 5.04 | 5.90 | 6.90 | 8.07 | 9.41 | 10.95 | 12.72 | 14.72 |
| | P | | 1.46 | 1.49 | 1.52 | 1.54 | 1.56 | 1.58 | 1.61 | 1.63 | 1.66 | 1.70 |
| | Q | 55℃ | 3.75 | 4.42 | 5.19 | 6.09 | 7.15 | 8.38 | 9.79 | 11.42 | 13.27 | |
| | P | | 1.34 | 1.37 | 1.39 | 1.42 | 1.44 | 1.46 | 1.48 | 1.51 | 1.54 | |
| | Q | 50℃ | 3.84 | 4.53 | 5.34 | 6.29 | 7.40 | 8.69 | 10.18 | 11.88 | | |
| | P | | 1.23 | 1.26 | 1.28 | 1.30 | 1.32 | 1.35 | 1.37 | 1.40 | | |
| | Q | 45℃ | 3.92 | 4.64 | 5.49 | 6.49 | 7.65 | 9.00 | 10.56 | | | |
| | P | | 1.14 | 1.16 | 1.18 | 1.20 | 1.22 | 1.25 | 1.27 | | | |
| | Q | 40℃ | 4.02 | 4.76 | 5.65 | 6.69 | 7.90 | 9.31 | | | | |
| | P | | 1.05 | 1.07 | 1.09 | 1.11 | 1.13 | 1.15 | | | | |
| | Q | 35℃ | 4.11 | 4.88 | 5.80 | 6.89 | 8.15 | | | | | |
| | P | | 0.96 | 0.98 | 1.00 | 1.02 | 1.05 | | | | | |
| | Q | 30℃ | 4.21 | 5.01 | 5.96 | 7.08 | | | | | | |
| | P | | 0.89 | 0.90 | 0.92 | 0.95 | | | | | | |
| WW120KB-TFD-GN1 | Q | 100℃ | | | | 7.48 | 8.31 | 9.31 | 10.49 | 11.89 | 13.54 | 15.47 |
| | P | | | | | 4.89 | 4.97 | 5.04 | 5.09 | 5.14 | 5.19 | 5.23 |
| | Q | 95℃ | | | | 7.68 | 8.62 | 9.73 | 11.04 | 12.59 | 14.40 | 16.50 |
| | P | | | | | 4.50 | 4.57 | 4.63 | 4.69 | 4.73 | 4.77 | 4.81 |
| | Q | 90℃ | | | 7.01 | 7.90 | 8.94 | 10.17 | 11.61 | 13.30 | 15.26 | 17.53 |
| | P | | | | 4.07 | 4.14 | 4.21 | 4.26 | 4.31 | 4.35 | 4.39 | 4.43 |
| | Q | 85℃ | | 6.31 | 7.16 | 8.14 | 9.29 | 10.63 | 12.20 | 14.02 | 16.14 | 18.58 |
| | P | | | 3.67 | 3.75 | 3.81 | 3.87 | 3.92 | 3.96 | 4.00 | 4.04 | 4.08 |
| | Q | 80℃ | 5.61 | 6.41 | 7.33 | 8.40 | 9.64 | 11.10 | 12.79 | 14.76 | 17.02 | 19.63 |
| | P | | 3.30 | 3.38 | 3.44 | 3.50 | 3.55 | 3.60 | 3.64 | 3.68 | 3.72 | 3.76 |
| | Q | 75℃ | 5.67 | 6.53 | 7.52 | 8.67 | 10.01 | 11.58 | 13.39 | 15.50 | 17.91 | 20.68 |
| | P | | 3.03 | 3.10 | 3.17 | 3.22 | 3.26 | 3.30 | 3.34 | 3.38 | 3.42 | 3.47 |
| | Q | 70℃ | 5.75 | 6.67 | 7.73 | 8.96 | 10.39 | 12.07 | 14.01 | 16.24 | 18.81 | 21.73 |
| | P | | 2.79 | 2.85 | 2.91 | 2.96 | 3.00 | 3.04 | 3.07 | 3.11 | 3.15 | 3.20 |
| | Q | 65℃ | 5.85 | 6.82 | 7.94 | 9.25 | 10.78 | 12.56 | 14.62 | 16.99 | 19.70 | 22.79 |
| | P | | 2.57 | 2.62 | 2.67 | 2.72 | 2.75 | 2.79 | 2.83 | 2.87 | 2.91 | 2.96 |
| | Q | 60℃ | 5.96 | 6.98 | 8.17 | 9.56 | 11.18 | 13.06 | 15.24 | 17.74 | 20.60 | 23.84 |
| | P | | 2.36 | 2.41 | 2.46 | 2.49 | 2.53 | 2.57 | 2.61 | 2.65 | 2.69 | 2.75 |
| | Q | 55℃ | 6.08 | 7.15 | 8.41 | 9.87 | 11.58 | 13.57 | 15.86 | 18.49 | 21.49 | |
| | P | | 2.17 | 2.22 | 2.26 | 2.29 | 2.33 | 2.37 | 2.40 | 2.45 | 2.50 | |
| | Q | 50℃ | 6.22 | 7.33 | 8.65 | 10.19 | 11.99 | 14.08 | 16.48 | 19.24 | | |
| | P | | 2.00 | 2.04 | 2.08 | 2.11 | 2.15 | 2.18 | 2.22 | 2.27 | | |
| | Q | 45℃ | 6.36 | 7.52 | 8.90 | 10.51 | 12.40 | 14.58 | 17.10 | | | |
| | P | | 1.84 | 1.88 | 1.91 | 1.94 | 1.98 | 2.02 | 2.06 | | | |
| | Q | 40℃ | 6.51 | 7.72 | 9.15 | 10.83 | 12.80 | 15.09 | | | | |
| | P | | 1.69 | 1.73 | 1.76 | 1.79 | 1.83 | 1.87 | | | | |
| | Q | 35℃ | 6.66 | 7.91 | 9.40 | 11.16 | 13.21 | | | | | |
| | P | | 1.56 | 1.59 | 1.62 | 1.66 | 1.69 | | | | | |
| | Q | 30℃ | 6.82 | 8.11 | 9.65 | 11.47 | | | | | | |
| | P | | 1.43 | 1.46 | 1.50 | 1.53 | | | | | | |

注：冷凝器出口过冷度5. 0K, 过热度5. 0K

*Note：Condenser Outlet Subcooling 5.0K,Subheating 5.0K*



**R515B** — **WW**

不带喷气增焓 *W/O EVI*

# 制热量
## Heating Capacity

制热量 HEATING CAPACITY

| 型号 Model | 项目 Item (KW) | Tc\Te | -5℃ | 0℃ | 5℃ | 10℃ | 15℃ | 20℃ | 25℃ | 30℃ | 35℃ | 40℃ |
|---|---|---|---|---|---|---|---|---|---|---|---|---|
| WW160KB-TFD-GN1 | Q | 100℃ | | | | 9.56 | 10.63 | 11.90 | 13.41 | 15.20 | 17.31 | 19.77 |
| | P | | | | | 6.25 | 6.35 | 6.44 | 6.51 | 6.57 | 6.63 | 6.68 |
| | Q | 95℃ | | | | 9.81 | 11.02 | 12.44 | 14.12 | 16.09 | 18.40 | 21.09 |
| | P | | | | | 5.76 | 5.85 | 5.92 | 5.99 | 6.05 | 6.10 | 6.15 |
| | Q | 90℃ | | | 8.96 | 10.10 | 11.43 | 13.00 | 14.84 | 17.00 | 19.51 | 22.41 |
| | P | | | | 5.20 | 5.30 | 5.38 | 5.45 | 5.51 | 5.56 | 5.61 | 5.66 |
| | Q | 85℃ | | 8.07 | 9.15 | 10.41 | 11.87 | 13.58 | 15.59 | 17.92 | 20.63 | 23.74 |
| | P | | | 4.69 | 4.79 | 4.87 | 4.94 | 5.00 | 5.06 | 5.11 | 5.16 | 5.21 |
| | Q | 80℃ | 7.17 | 8.20 | 9.37 | 10.74 | 12.33 | 14.18 | 16.35 | 18.86 | 21.76 | 25.08 |
| | P | | 4.21 | 4.31 | 4.40 | 4.48 | 4.54 | 4.60 | 4.65 | 4.70 | 4.75 | 4.80 |
| | Q | 75℃ | 7.25 | 8.35 | 9.61 | 11.08 | 12.80 | 14.80 | 17.12 | 19.81 | 22.90 | 26.43 |
| | P | | 3.88 | 3.97 | 4.05 | 4.11 | 4.17 | 4.22 | 4.27 | 4.32 | 4.37 | 4.43 |
| | Q | 70℃ | 7.35 | 8.52 | 9.87 | 11.45 | 13.28 | 15.42 | 17.90 | 20.76 | 24.04 | 27.78 |
| | P | | 3.57 | 3.65 | 3.72 | 3.78 | 3.83 | 3.88 | 3.93 | 3.98 | 4.03 | 4.09 |
| | Q | 65℃ | 7.47 | 8.71 | 10.15 | 11.83 | 13.78 | 16.06 | 18.69 | 21.72 | 25.18 | 29.13 |
| | P | | 3.28 | 3.35 | 3.42 | 3.47 | 3.52 | 3.57 | 3.61 | 3.67 | 3.72 | 3.79 |
| | Q | 60℃ | 7.62 | 8.92 | 10.44 | 12.22 | 14.29 | 16.70 | 19.48 | 22.68 | 26.33 | 30.47 |
| | P | | 3.02 | 3.08 | 3.14 | 3.19 | 3.24 | 3.28 | 3.33 | 3.38 | 3.44 | 3.52 |
| | Q | 55℃ | 7.77 | 9.14 | 10.74 | 12.62 | 14.81 | 17.34 | 20.28 | 23.64 | 27.47 | |
| | P | | 2.78 | 2.83 | 2.89 | 2.93 | 2.98 | 3.02 | 3.07 | 3.13 | 3.20 | |
| | Q | 50℃ | 7.94 | 9.37 | 11.06 | 13.03 | 15.32 | 17.99 | 21.07 | 24.59 | | |
| | P | | 2.56 | 2.61 | 2.65 | 2.70 | 2.74 | 2.79 | 2.84 | 2.90 | | |
| | Q | 45℃ | 8.13 | 9.62 | 11.37 | 13.44 | 15.84 | 18.64 | 21.86 | | | |
| | P | | 2.35 | 2.40 | 2.44 | 2.48 | 2.53 | 2.58 | 2.64 | | | |
| | Q | 40℃ | 8.32 | 9.86 | 11.69 | 13.85 | 16.36 | 19.28 | | | | |
| | P | | 2.16 | 2.21 | 2.25 | 2.29 | 2.34 | 2.39 | | | | |
| | Q | 35℃ | 8.51 | 10.11 | 12.02 | 14.26 | 16.88 | | | | | |
| | P | | 1.99 | 2.03 | 2.07 | 2.12 | 2.16 | | | | | |
| | Q | 30℃ | 8.71 | 10.37 | 12.34 | 14.66 | | | | | | |
| | P | | 1.83 | 1.87 | 1.91 | 1.96 | | | | | | |
| WW190KB-TFD-GN1 | Q | 100℃ | | | | 11.24 | 12.50 | 13.99 | 15.77 | 17.87 | 20.35 | 23.25 |
| | P | | | | | 7.35 | 7.47 | 7.57 | 7.65 | 7.73 | 7.80 | 7.86 |
| | Q | 95℃ | | | | 11.54 | 12.96 | 14.63 | 16.60 | 18.92 | 21.64 | 24.80 |
| | P | | | | | 6.77 | 6.87 | 6.96 | 7.04 | 7.11 | 7.17 | 7.24 |
| | Q | 90℃ | | | 10.53 | 11.87 | 13.44 | 15.29 | 17.46 | 19.99 | 22.94 | 26.35 |
| | P | | | | 6.12 | 6.23 | 6.32 | 6.40 | 6.47 | 6.54 | 6.60 | 6.66 |
| | Q | 85℃ | | 9.49 | 10.76 | 12.24 | 13.96 | 15.97 | 18.33 | 21.08 | 24.26 | 27.92 |
| | P | | | 5.51 | 5.63 | 5.73 | 5.81 | 5.88 | 5.95 | 6.01 | 6.07 | 6.13 |
| | Q | 80℃ | 8.43 | 9.64 | 11.02 | 12.62 | 14.49 | 16.68 | 19.22 | 22.18 | 25.59 | 29.50 |
| | P | | 4.95 | 5.07 | 5.18 | 5.26 | 5.34 | 5.41 | 5.47 | 5.53 | 5.59 | 5.65 |
| | Q | 75℃ | 8.53 | 9.82 | 11.31 | 13.03 | 15.05 | 17.40 | 20.13 | 23.29 | 26.92 | 31.08 |
| | P | | 4.56 | 4.67 | 4.76 | 4.84 | 4.90 | 4.97 | 5.02 | 5.08 | 5.14 | 5.21 |
| | Q | 70℃ | 8.65 | 10.02 | 11.61 | 13.46 | 15.62 | 18.14 | 21.05 | 24.41 | 28.27 | 32.67 |
| | P | | 4.19 | 4.29 | 4.37 | 4.44 | 4.50 | 4.56 | 4.62 | 4.68 | 4.74 | 4.81 |
| | Q | 65℃ | 8.79 | 10.25 | 11.94 | 13.91 | 16.21 | 18.88 | 21.98 | 25.54 | 29.61 | 34.25 |
| | P | | 3.86 | 3.94 | 4.02 | 4.08 | 4.14 | 4.19 | 4.25 | 4.31 | 4.38 | 4.45 |
| | Q | 60℃ | 8.96 | 10.49 | 12.28 | 14.37 | 16.81 | 19.64 | 22.91 | 26.67 | 30.96 | 35.84 |
| | P | | 3.55 | 3.63 | 3.69 | 3.75 | 3.80 | 3.86 | 3.92 | 3.98 | 4.05 | 4.13 |
| | Q | 55℃ | 9.14 | 10.75 | 12.63 | 14.84 | 17.41 | 20.40 | 23.84 | 27.80 | 32.30 | |
| | P | | 3.27 | 3.33 | 3.39 | 3.45 | 3.50 | 3.55 | 3.61 | 3.68 | 3.76 | |
| | Q | 50℃ | 9.34 | 11.02 | 13.00 | 15.32 | 18.02 | 21.16 | 24.78 | 28.92 | | |
| | P | | 3.01 | 3.07 | 3.12 | 3.17 | 3.22 | 3.28 | 3.34 | 3.41 | | |
| | Q | 45℃ | 9.56 | 11.31 | 13.37 | 15.80 | 18.63 | 21.92 | 25.71 | | | |
| | P | | 2.77 | 2.82 | 2.87 | 2.92 | 2.97 | 3.03 | 3.10 | | | |
| | Q | 40℃ | 9.78 | 11.60 | 13.75 | 16.28 | 19.24 | 22.68 | | | | |
| | P | | 2.54 | 2.60 | 2.64 | 2.69 | 2.75 | 2.81 | | | | |
| | Q | 35℃ | 10.01 | 11.89 | 14.13 | 16.77 | 19.85 | | | | | |
| | P | | 2.34 | 2.39 | 2.44 | 2.49 | 2.55 | | | | | |
| | Q | 30℃ | 10.24 | 12.19 | 14.51 | 17.24 | | | | | | |
| | P | | 2.15 | 2.20 | 2.25 | 2.30 | | | | | | |

注：冷凝器出口过冷度5. 0K, 过热度5. 0K

*Note：Condenser Outlet Subcooling 5.0K,Subheating 5.0K*

# 制热量
## Heating Capacity

**WW** — **R515B**

不带喷气增焓 *W/O EVI*

制热量 HEATING CAPACITY

| 型号 Model | 项目 Item (KW) | Tc\Te | -5℃ | 0℃ | 5℃ | 10℃ | 15℃ | 20℃ | 25℃ | 30℃ | 35℃ | 40℃ |
|---|---|---|---|---|---|---|---|---|---|---|---|---|
| WW240KB-TFD-GN1 | Q | 100℃ | | | | 14.70 | 16.34 | 18.30 | 20.62 | 23.37 | 26.62 | 30.41 |
| | P | | | | | 9.62 | 9.77 | 9.90 | 10.01 | 10.11 | 10.20 | 10.28 |
| | Q | 95℃ | | | | 15.09 | 16.94 | 19.13 | 21.71 | 24.75 | 28.30 | 32.43 |
| | P | | | | | 8.86 | 8.99 | 9.11 | 9.21 | 9.30 | 9.38 | 9.46 |
| | Q | 90℃ | | | 13.77 | 15.53 | 17.58 | 20.00 | 22.83 | 26.14 | 30.00 | 34.46 |
| | P | | | | 8.00 | 8.15 | 8.27 | 8.37 | 8.47 | 8.55 | 8.63 | 8.71 |
| | Q | 85℃ | | 12.41 | 14.08 | 16.00 | 18.25 | 20.89 | 23.97 | 27.57 | 31.73 | 36.52 |
| | P | | | 7.21 | 7.36 | 7.49 | 7.60 | 7.70 | 7.78 | 7.86 | 7.94 | 8.02 |
| | Q | 80℃ | 11.03 | 12.61 | 14.41 | 16.51 | 18.96 | 21.81 | 25.14 | 29.01 | 33.46 | 38.58 |
| | P | | 6.48 | 6.64 | 6.77 | 6.88 | 6.98 | 7.07 | 7.15 | 7.23 | 7.30 | 7.39 |
| | Q | 75℃ | 11.15 | 12.84 | 14.79 | 17.05 | 19.68 | 22.76 | 26.33 | 30.46 | 35.21 | 40.65 |
| | P | | 5.96 | 6.10 | 6.22 | 6.32 | 6.41 | 6.49 | 6.57 | 6.65 | 6.73 | 6.81 |
| | Q | 70℃ | 11.31 | 13.11 | 15.19 | 17.61 | 20.43 | 23.72 | 27.53 | 31.93 | 36.97 | 42.72 |
| | P | | 5.49 | 5.61 | 5.72 | 5.81 | 5.89 | 5.97 | 6.04 | 6.12 | 6.20 | 6.29 |
| | Q | 65℃ | 11.50 | 13.40 | 15.61 | 18.19 | 21.20 | 24.69 | 28.74 | 33.40 | 38.73 | 44.80 |
| | P | | 5.05 | 5.16 | 5.25 | 5.34 | 5.41 | 5.49 | 5.56 | 5.64 | 5.72 | 5.83 |
| | Q | 60℃ | 11.71 | 13.72 | 16.06 | 18.79 | 21.98 | 25.68 | 29.96 | 34.88 | 40.49 | 46.87 |
| | P | | 4.64 | 4.74 | 4.83 | 4.90 | 4.98 | 5.05 | 5.12 | 5.20 | 5.30 | 5.41 |
| | Q | 55℃ | 11.95 | 14.06 | 16.52 | 19.41 | 22.77 | 26.68 | 31.18 | 36.35 | 42.25 | |
| | P | | 4.27 | 4.36 | 4.44 | 4.51 | 4.58 | 4.65 | 4.73 | 4.81 | 4.92 | |
| | Q | 50℃ | 12.22 | 14.42 | 17.00 | 20.03 | 23.57 | 27.67 | 32.40 | 37.83 | | |
| | P | | 3.93 | 4.01 | 4.08 | 4.15 | 4.22 | 4.29 | 4.37 | 4.47 | | |
| | Q | 45℃ | 12.50 | 14.79 | 17.49 | 20.66 | 24.37 | 28.67 | 33.62 | | | |
| | P | | 3.62 | 3.69 | 3.76 | 3.82 | 3.89 | 3.97 | 4.05 | | | |
| | Q | 40℃ | 12.79 | 15.17 | 17.98 | 21.30 | 25.17 | 29.66 | | | | |
| | P | | 3.33 | 3.39 | 3.46 | 3.52 | 3.59 | 3.68 | | | | |
| | Q | 35℃ | 13.09 | 15.55 | 18.48 | 21.93 | 25.96 | | | | | |
| | P | | 3.06 | 3.12 | 3.19 | 3.25 | 3.33 | | | | | |
| | Q | 30℃ | 13.40 | 15.94 | 18.97 | 22.55 | | | | | | |
| | P | | 2.82 | 2.88 | 2.94 | 3.01 | | | | | | |
| WW280KB-TFD-GN1 | Q | 100℃ | | | | 16.88 | 18.77 | 21.02 | 23.69 | 26.85 | 30.57 | 34.94 |
| | P | | | | | 11.05 | 11.22 | 11.37 | 11.50 | 11.61 | 11.71 | 11.81 |
| | Q | 95℃ | | | | 17.34 | 19.46 | 21.97 | 24.94 | 28.43 | 32.51 | 37.25 |
| | P | | | | | 10.17 | 10.33 | 10.46 | 10.58 | 10.68 | 10.78 | 10.87 |
| | Q | 90℃ | | | 15.82 | 17.84 | 20.20 | 22.97 | 26.22 | 30.03 | 34.46 | 39.59 |
| | P | | | | 9.19 | 9.36 | 9.50 | 9.62 | 9.73 | 9.82 | 9.91 | 10.01 |
| | Q | 85℃ | | 14.26 | 16.17 | 18.38 | 20.97 | 24.00 | 27.54 | 31.66 | 36.44 | 41.95 |
| | P | | | 8.29 | 8.46 | 8.61 | 8.73 | 8.84 | 8.94 | 9.03 | 9.12 | 9.21 |
| | Q | 80℃ | 12.67 | 14.48 | 16.56 | 18.97 | 21.77 | 25.06 | 28.88 | 33.32 | 38.44 | 44.32 |
| | P | | 7.44 | 7.62 | 7.78 | 7.91 | 8.02 | 8.12 | 8.21 | 8.30 | 8.39 | 8.49 |
| | Q | 75℃ | 12.81 | 14.75 | 16.99 | 19.58 | 22.61 | 26.14 | 30.24 | 34.99 | 40.45 | 46.69 |
| | P | | 6.85 | 7.01 | 7.15 | 7.27 | 7.37 | 7.46 | 7.55 | 7.63 | 7.73 | 7.83 |
| | Q | 70℃ | 12.99 | 15.06 | 17.45 | 20.23 | 23.47 | 27.25 | 31.62 | 36.67 | 42.47 | 49.08 |
| | P | | 6.30 | 6.45 | 6.57 | 6.67 | 6.77 | 6.85 | 6.94 | 7.03 | 7.12 | 7.23 |
| | Q | 65℃ | 13.21 | 15.39 | 17.93 | 20.90 | 24.35 | 28.37 | 33.02 | 38.37 | 44.49 | 51.46 |
| | P | | 5.80 | 5.93 | 6.03 | 6.13 | 6.22 | 6.30 | 6.39 | 6.48 | 6.58 | 6.69 |
| | Q | 60℃ | 13.45 | 15.76 | 18.45 | 21.59 | 25.25 | 29.50 | 34.42 | 40.06 | 46.51 | 53.84 |
| | P | | 5.33 | 5.45 | 5.55 | 5.63 | 5.72 | 5.80 | 5.88 | 5.98 | 6.09 | 6.21 |
| | Q | 55℃ | 13.73 | 16.15 | 18.98 | 22.29 | 26.16 | 30.64 | 35.82 | 41.76 | 48.53 | |
| | P | | 4.91 | 5.01 | 5.10 | 5.18 | 5.26 | 5.34 | 5.43 | 5.53 | 5.65 | |
| | Q | 50℃ | 14.03 | 16.56 | 19.53 | 23.01 | 27.07 | 31.79 | 37.22 | 43.45 | | |
| | P | | 4.51 | 4.61 | 4.69 | 4.77 | 4.84 | 4.93 | 5.02 | 5.13 | | |
| | Q | 45℃ | 14.36 | 16.99 | 20.09 | 23.74 | 27.99 | 32.93 | 38.62 | | | |
| | P | | 4.15 | 4.24 | 4.31 | 4.39 | 4.47 | 4.56 | 4.66 | | | |
| | Q | 40℃ | 14.69 | 17.42 | 20.66 | 24.46 | 28.91 | 34.07 | | | | |
| | P | | 3.82 | 3.90 | 3.97 | 4.05 | 4.13 | 4.22 | | | | |
| | Q | 35℃ | 15.04 | 17.87 | 21.23 | 25.19 | 29.82 | | | | | |
| | P | | 3.52 | 3.59 | 3.66 | 3.74 | 3.82 | | | | | |
| | Q | 30℃ | 15.39 | 18.31 | 21.79 | 25.91 | | | | | | |
| | P | | 3.24 | 3.31 | 3.38 | 3.46 | | | | | | |

注：冷凝器出口过冷度5. 0K, 过热度5. 0K

*Note：Condenser Outlet Subcooling 5.0K,Subheating 5.0K*



**R515B** — **WW**

不带喷气增焓 *W/O EVI*

# 制热量
## Heating Capacity

制热量 HEATING CAPACITY

| 型号 Model | 项目 Item (KW) | Tc\Te | -5℃ | 0℃ | 5℃ | 10℃ | 15℃ | 20℃ | 25℃ | 30℃ | 35℃ | 40℃ |
|---|---|---|---|---|---|---|---|---|---|---|---|---|
| WW360KB-TFD-GN1 | Q | 100℃ | | | | 22.02 | 24.49 | 27.42 | 30.90 | 35.02 | 39.89 | 45.57 |
| | P | | | | | 14.41 | 14.64 | 14.83 | 15.00 | 15.15 | 15.28 | 15.40 |
| | Q | 95℃ | | | | 22.62 | 25.39 | 28.67 | 32.53 | 37.08 | 42.40 | 48.59 |
| | P | | | | | 13.27 | 13.47 | 13.65 | 13.80 | 13.94 | 14.06 | 14.18 |
| | Q | 90℃ | | | 20.64 | 23.27 | 26.35 | 29.96 | 34.21 | 39.18 | 44.96 | 51.65 |
| | P | | | | 11.99 | 12.21 | 12.39 | 12.55 | 12.69 | 12.81 | 12.93 | 13.05 |
| | Q | 85℃ | | 18.60 | 21.09 | 23.98 | 27.35 | 31.31 | 35.93 | 41.31 | 47.54 | 54.72 |
| | P | | | 10.81 | 11.03 | 11.23 | 11.39 | 11.53 | 11.66 | 11.78 | 11.90 | 12.02 |
| | Q | 80℃ | 16.53 | 18.89 | 21.60 | 24.74 | 28.41 | 32.69 | 37.68 | 43.47 | 50.15 | 57.81 |
| | P | | 9.71 | 9.94 | 10.14 | 10.32 | 10.46 | 10.59 | 10.71 | 10.83 | 10.95 | 11.07 |
| | Q | 75℃ | 16.71 | 19.24 | 22.16 | 25.54 | 29.49 | 34.10 | 39.45 | 45.65 | 52.77 | 60.91 |
| | P | | 8.93 | 9.14 | 9.32 | 9.48 | 9.61 | 9.73 | 9.85 | 9.96 | 10.08 | 10.21 |
| | Q | 70℃ | 16.94 | 19.64 | 22.76 | 26.39 | 30.62 | 35.54 | 41.25 | 47.84 | 55.40 | 64.02 |
| | P | | 8.22 | 8.41 | 8.57 | 8.71 | 8.83 | 8.94 | 9.05 | 9.17 | 9.29 | 9.43 |
| | Q | 65℃ | 17.23 | 20.08 | 23.40 | 27.26 | 31.77 | 37.00 | 43.07 | 50.05 | 58.04 | 67.13 |
| | P | | 7.56 | 7.73 | 7.87 | 8.00 | 8.11 | 8.22 | 8.33 | 8.45 | 8.58 | 8.73 |
| | Q | 60℃ | 17.55 | 20.56 | 24.07 | 28.16 | 32.94 | 38.48 | 44.90 | 52.26 | 60.68 | 70.23 |
| | P | | 6.96 | 7.11 | 7.23 | 7.35 | 7.46 | 7.56 | 7.67 | 7.80 | 7.94 | 8.10 |
| | Q | 55℃ | 17.91 | 21.07 | 24.76 | 29.08 | 34.12 | 39.97 | 46.73 | 54.48 | 63.31 | |
| | P | | 6.40 | 6.53 | 6.65 | 6.76 | 6.86 | 6.97 | 7.08 | 7.21 | 7.37 | |
| | Q | 50℃ | 18.31 | 21.61 | 25.48 | 30.02 | 35.32 | 41.47 | 48.56 | 56.68 | | |
| | P | | 5.89 | 6.01 | 6.12 | 6.22 | 6.32 | 6.43 | 6.55 | 6.69 | | |
| | Q | 45℃ | 18.73 | 22.16 | 26.21 | 30.96 | 36.52 | 42.96 | 50.38 | | | |
| | P | | 5.42 | 5.53 | 5.63 | 5.73 | 5.83 | 5.94 | 6.07 | | | |
| | Q | 40℃ | 19.16 | 22.73 | 26.95 | 31.91 | 37.71 | 44.44 | | | | |
| | P | | 4.99 | 5.09 | 5.18 | 5.28 | 5.39 | 5.51 | | | | |
| | Q | 35℃ | 19.62 | 23.31 | 27.69 | 32.86 | 38.90 | | | | | |
| | P | | 4.59 | 4.68 | 4.78 | 4.88 | 4.99 | | | | | |
| | Q | 30℃ | 20.08 | 23.89 | 28.43 | 33.80 | | | | | | |
| | P | | 4.22 | 4.31 | 4.41 | 4.51 | | | | | | |
| WW470KB -TWD-GN1 | Q | 100℃ | | | | 28.76 | 31.98 | 35.80 | 40.35 | 45.73 | 52.08 | 59.51 |
| | P | | | | | 18.82 | 19.12 | 19.37 | 19.59 | 19.78 | 19.95 | 20.11 |
| | Q | 95℃ | | | | 29.53 | 33.15 | 37.43 | 42.48 | 48.42 | 55.37 | 63.45 |
| | P | | | | | 17.33 | 17.59 | 17.82 | 18.02 | 18.20 | 18.36 | 18.51 |
| | Q | 90℃ | | | 26.95 | 30.39 | 34.40 | 39.12 | 44.67 | 51.16 | 58.70 | 67.44 |
| | P | | | | 15.66 | 15.94 | 16.18 | 16.39 | 16.57 | 16.73 | 16.89 | 17.04 |
| | Q | 85℃ | | 24.29 | 27.54 | 31.31 | 35.72 | 40.88 | 46.91 | 53.94 | 62.08 | 71.45 |
| | P | | | 14.11 | 14.41 | 14.66 | 14.87 | 15.06 | 15.23 | 15.38 | 15.53 | 15.69 |
| | Q | 80℃ | 21.58 | 24.67 | 28.21 | 32.30 | 37.09 | 42.68 | 49.19 | 56.75 | 65.48 | 75.48 |
| | P | | 12.67 | 12.98 | 13.25 | 13.47 | 13.66 | 13.83 | 13.99 | 14.14 | 14.29 | 14.45 |
| | Q | 75℃ | 21.82 | 25.13 | 28.93 | 33.35 | 38.51 | 44.53 | 51.52 | 59.60 | 68.90 | 79.54 |
| | P | | 11.66 | 11.94 | 12.17 | 12.38 | 12.55 | 12.71 | 12.86 | 13.00 | 13.16 | 13.33 |
| | Q | 70℃ | 22.12 | 25.65 | 29.72 | 34.45 | 39.98 | 46.41 | 53.87 | 62.47 | 72.34 | 83.60 |
| | P | | 10.73 | 10.98 | 11.19 | 11.37 | 11.53 | 11.68 | 11.82 | 11.97 | 12.13 | 12.31 |
| | Q | 65℃ | 22.49 | 26.22 | 30.55 | 35.59 | 41.48 | 48.32 | 56.24 | 65.35 | 75.79 | 87.65 |
| | P | | 9.87 | 10.09 | 10.28 | 10.44 | 10.59 | 10.73 | 10.88 | 11.03 | 11.20 | 11.40 |
| | Q | 60℃ | 22.92 | 26.85 | 31.42 | 36.77 | 43.01 | 50.25 | 58.62 | 68.24 | 79.23 | 91.71 |
| | P | | 9.08 | 9.28 | 9.45 | 9.60 | 9.74 | 9.87 | 10.02 | 10.18 | 10.37 | 10.58 |
| | Q | 55℃ | 23.39 | 27.51 | 32.33 | 37.97 | 44.55 | 52.19 | 61.01 | 71.13 | 82.67 | |
| | P | | 8.36 | 8.53 | 8.68 | 8.82 | 8.96 | 9.10 | 9.25 | 9.42 | 9.62 | |
| | Q | 50℃ | 23.91 | 28.21 | 33.27 | 39.20 | 46.11 | 54.14 | 63.40 | 74.01 | | |
| | P | | 7.69 | 7.85 | 7.98 | 8.12 | 8.25 | 8.39 | 8.55 | 8.74 | | |
| | Q | 45℃ | 24.45 | 28.94 | 34.22 | 40.43 | 47.68 | 56.09 | 65.78 | | | |
| | P | | 7.08 | 7.22 | 7.35 | 7.48 | 7.61 | 7.76 | 7.93 | | | |
| | Q | 40℃ | 25.02 | 29.68 | 35.19 | 41.67 | 49.24 | 58.03 | | | | |
| | P | | 6.51 | 6.64 | 6.77 | 6.89 | 7.03 | 7.19 | | | | |
| | Q | 35℃ | 25.61 | 30.43 | 36.16 | 42.91 | 50.80 | | | | | |
| | P | | 5.99 | 6.11 | 6.24 | 6.37 | 6.51 | | | | | |
| | Q | 30℃ | 26.22 | 31.19 | 37.12 | 44.13 | | | | | | |
| | P | | 5.51 | 5.63 | 5.75 | 5.89 | | | | | | |

注：冷凝器出口过冷度5. 0K, 过热度5. 0K

*Note：Condenser Outlet Subcooling 5.0K,Subheating 5.0K*

# 制热量
## Heating Capacity

制热量 HEATING CAPACITY

**WW** — **R515B**

不带喷气增焓 *W/O EVI*

| 型号 Model | 项目 Item (KW) | Tc\Te | -5℃ | 0℃ | 5℃ | 10℃ | 15℃ | 20℃ | 25℃ | 30℃ | 35℃ | 40℃ |
|---|---|---|---|---|---|---|---|---|---|---|---|---|
| WW600KB -TWD-GN1 | Q | 100℃ | | | | 35.39 | 39.36 | 44.06 | 49.66 | 56.29 | 64.10 | 73.24 |
| | P | | | | | 23.16 | 23.53 | 23.84 | 24.11 | 24.34 | 24.56 | 24.75 |
| | Q | 95℃ | | | | 36.35 | 40.81 | 46.07 | 52.28 | 59.59 | 68.15 | 78.09 |
| | P | | | | | 21.32 | 21.65 | 21.93 | 22.18 | 22.39 | 22.59 | 22.79 |
| | Q | 90℃ | | | 33.17 | 37.40 | 42.34 | 48.15 | 54.98 | 62.96 | 72.25 | 83.00 |
| | P | | | | 19.27 | 19.62 | 19.91 | 20.17 | 20.39 | 20.59 | 20.78 | 20.98 |
| | Q | 85℃ | | 29.89 | 33.90 | 38.54 | 43.96 | 50.31 | 57.74 | 66.38 | 76.40 | 87.94 |
| | P | | | 17.37 | 17.73 | 18.04 | 18.30 | 18.53 | 18.74 | 18.93 | 19.12 | 19.31 |
| | Q | 80℃ | 26.56 | 30.36 | 34.71 | 39.76 | 45.65 | 52.53 | 60.55 | 69.85 | 80.59 | 92.90 |
| | P | | 15.60 | 15.98 | 16.30 | 16.58 | 16.82 | 17.03 | 17.22 | 17.40 | 17.59 | 17.79 |
| | Q | 75℃ | 26.85 | 30.93 | 35.61 | 41.05 | 47.40 | 54.80 | 63.40 | 73.36 | 84.80 | 97.89 |
| | P | | 14.36 | 14.70 | 14.98 | 15.23 | 15.45 | 15.64 | 15.82 | 16.01 | 16.20 | 16.41 |
| | Q | 70℃ | 27.23 | 31.56 | 36.57 | 42.40 | 49.20 | 57.12 | 66.30 | 76.89 | 89.03 | 102.89 |
| | P | | 13.21 | 13.51 | 13.77 | 13.99 | 14.19 | 14.37 | 14.55 | 14.73 | 14.93 | 15.15 |
| | Q | 65℃ | 27.68 | 32.27 | 37.60 | 43.81 | 51.05 | 59.47 | 69.22 | 80.43 | 93.27 | 107.88 |
| | P | | 12.15 | 12.42 | 12.65 | 12.85 | 13.04 | 13.21 | 13.39 | 13.58 | 13.79 | 14.03 |
| | Q | 60℃ | 28.21 | 33.04 | 38.68 | 45.26 | 52.93 | 61.85 | 72.15 | 83.99 | 97.52 | 112.87 |
| | P | | 11.18 | 11.42 | 11.63 | 11.81 | 11.98 | 12.15 | 12.33 | 12.53 | 12.76 | 13.02 |
| | Q | 55℃ | 28.79 | 33.86 | 39.79 | 46.74 | 54.84 | 64.24 | 75.09 | 87.55 | 101.75 | |
| | P | | 10.29 | 10.50 | 10.69 | 10.86 | 11.02 | 11.20 | 11.38 | 11.59 | 11.84 | |
| | Q | 50℃ | 29.42 | 34.72 | 40.94 | 48.24 | 56.76 | 66.64 | 78.03 | 91.09 | | |
| | P | | 9.46 | 9.66 | 9.83 | 9.99 | 10.15 | 10.33 | 10.53 | 10.75 | | |
| | Q | 45℃ | 30.09 | 35.61 | 42.12 | 49.76 | 58.68 | 69.04 | 80.96 | | | |
| | P | | 8.71 | 8.88 | 9.04 | 9.20 | 9.37 | 9.55 | 9.76 | | | |
| | Q | 40℃ | 30.80 | 36.53 | 43.31 | 51.29 | 60.61 | 71.42 | | | | |
| | P | | 8.02 | 8.17 | 8.33 | 8.48 | 8.66 | 8.85 | | | | |
| | Q | 35℃ | 31.53 | 37.46 | 44.50 | 52.81 | 62.52 | | | | | |
| | P | | 7.38 | 7.53 | 7.68 | 7.84 | 8.02 | | | | | |
| | Q | 30℃ | 32.26 | 38.39 | 45.69 | 54.31 | | | | | | |
| | P | | 6.79 | 6.93 | 7.08 | 7.25 | | | | | | |

注：冷凝器出口过冷度5. 0K, 过热度5. 0K

*Note：Condenser Outlet Subcooling 5.0K,Subheating 5.0K*



**R515B** — **WW**

带喷气增焓 *EVI*

# 制热量
## Heating Capacity

制热量 HEATING CAPACITY

| 型号 Model | 项目 Item (KW) | Tc\Te | -5℃ | 0℃ | 5℃ | 10℃ | 15℃ | 20℃ | 25℃ | 30℃ | 35℃ | 40℃ |
|---|---|---|---|---|---|---|---|---|---|---|---|---|
| WW70KB-TFD-GV1 | Q | 100℃ | 5.34 | 5.49 | 5.70 | 5.99 | 6.38 | 6.89 | 7.54 | 8.36 | 9.37 | 10.60 |
| | P | | 3.26 | 3.37 | 3.46 | 3.53 | 3.59 | 3.64 | 3.67 | 3.71 | 3.74 | 3.77 |
| | Q | 95℃ | 4.96 | 5.20 | 5.51 | 5.90 | 6.38 | 6.99 | 7.75 | 8.68 | 9.80 | 11.14 |
| | P | | 2.97 | 3.06 | 3.14 | 3.20 | 3.25 | 3.29 | 3.32 | 3.34 | 3.37 | 3.39 |
| | Q | 90℃ | 4.67 | 5.00 | 5.40 | 5.88 | 6.46 | 7.17 | 8.02 | 9.05 | 10.28 | 11.72 |
| | P | | 2.70 | 2.78 | 2.85 | 2.90 | 2.94 | 2.97 | 2.99 | 3.02 | 3.04 | 3.06 |
| | Q | 85℃ | 4.47 | 4.88 | 5.36 | 5.92 | 6.59 | 7.39 | 8.35 | 9.47 | 10.79 | 12.33 |
| | P | | 2.46 | 2.53 | 2.59 | 2.63 | 2.66 | 2.69 | 2.71 | 2.72 | 2.74 | 2.77 |
| | Q | 80℃ | 4.34 | 4.83 | 5.39 | 6.03 | 6.78 | 7.67 | 8.71 | 9.92 | 11.34 | 12.98 |
| | P | | 2.24 | 2.30 | 2.35 | 2.39 | 2.41 | 2.43 | 2.45 | 2.47 | 2.48 | 2.51 |
| | Q | 75℃ | 4.27 | 4.84 | 5.47 | 6.18 | 7.02 | 7.98 | 9.10 | 10.40 | 11.91 | 13.63 |
| | P | | 2.04 | 2.10 | 2.14 | 2.17 | 2.19 | 2.21 | 2.22 | 2.24 | 2.26 | 2.28 |
| | Q | 70℃ | 4.27 | 4.89 | 5.59 | 6.38 | 7.28 | 8.32 | 9.52 | 10.90 | 12.48 | 14.29 |
| | P | | 1.87 | 1.91 | 1.95 | 1.97 | 1.99 | 2.01 | 2.02 | 2.04 | 2.06 | 2.09 |
| | Q | 65℃ | 4.31 | 4.99 | 5.75 | 6.60 | 7.57 | 8.68 | 9.95 | 11.40 | 13.06 | 14.95 |
| | P | | 1.70 | 1.75 | 1.78 | 1.80 | 1.82 | 1.83 | 1.85 | 1.87 | 1.89 | 1.93 |
| | Q | 60℃ | 4.38 | 5.12 | 5.94 | 6.85 | 7.88 | 9.05 | 10.38 | 11.90 | 13.64 | 15.60 |
| | P | | 1.56 | 1.60 | 1.63 | 1.65 | 1.67 | 1.68 | 1.70 | 1.72 | 1.75 | 1.80 |
| | Q | 55℃ | 4.49 | 5.27 | 6.14 | 7.10 | 8.19 | 9.41 | 10.81 | 12.39 | 14.19 | |
| | P | | 1.43 | 1.46 | 1.49 | 1.51 | 1.53 | 1.55 | 1.58 | 1.60 | 1.64 | |
| | Q | 50℃ | 4.61 | 5.44 | 6.35 | 7.36 | 8.49 | 9.77 | 11.22 | 12.86 | | |
| | P | | 1.31 | 1.34 | 1.37 | 1.40 | 1.42 | 1.44 | 1.47 | 1.51 | | |
| | Q | 45℃ | 4.74 | 5.60 | 6.55 | 7.61 | 8.78 | 10.11 | 11.61 | | | |
| | P | | 1.20 | 1.23 | 1.27 | 1.29 | 1.32 | 1.35 | 1.39 | | | |
| | Q | 40℃ | 4.87 | 5.77 | 6.75 | 7.84 | 9.05 | 10.42 | | | | |
| | P | | 1.10 | 1.14 | 1.17 | 1.20 | 1.24 | 1.27 | | | | |
| | Q | 35℃ | 4.99 | 5.91 | 6.92 | 8.04 | 9.29 | | | | | |
| | P | | 1.00 | 1.05 | 1.09 | 1.12 | 1.17 | | | | | |
| | Q | 30℃ | 5.09 | 6.03 | 7.06 | 8.21 | | | | | | |
| | P | | 0.91 | 0.96 | 1.01 | 1.06 | | | | | | |
| WW120KB-TFD-GV1 | Q | 100℃ | 7.90 | 7.67 | 7.80 | 8.26 | 9.03 | 10.09 | 11.41 | 12.97 | 14.75 | 16.73 |
| | P | | 4.95 | 4.99 | 5.04 | 5.12 | 5.21 | 5.30 | 5.39 | 5.47 | 5.54 | 5.58 |
| | Q | 95℃ | 7.74 | 7.60 | 7.83 | 8.40 | 9.30 | 10.49 | 11.95 | 13.67 | 15.62 | 17.78 |
| | P | | 4.65 | 4.68 | 4.74 | 4.81 | 4.90 | 4.99 | 5.08 | 5.16 | 5.23 | 5.27 |
| | Q | 90℃ | 7.63 | 7.58 | 7.91 | 8.59 | 9.60 | 10.93 | 12.54 | 14.41 | 16.53 | 18.87 |
| | P | | 4.35 | 4.38 | 4.43 | 4.51 | 4.59 | 4.68 | 4.77 | 4.85 | 4.92 | 4.96 |
| | Q | 85℃ | 7.58 | 7.62 | 8.04 | 8.82 | 9.95 | 11.40 | 13.16 | 15.18 | 17.47 | 19.98 |
| | P | | 4.05 | 4.08 | 4.13 | 4.20 | 4.28 | 4.37 | 4.46 | 4.54 | 4.60 | 4.64 |
| | Q | 80℃ | 7.58 | 7.69 | 8.20 | 9.09 | 10.34 | 11.91 | 13.80 | 15.98 | 18.42 | 21.11 |
| | P | | 3.75 | 3.78 | 3.83 | 3.90 | 3.98 | 4.07 | 4.15 | 4.23 | 4.29 | 4.33 |
| | Q | 75℃ | 7.62 | 7.81 | 8.41 | 9.39 | 10.75 | 12.45 | 14.47 | 16.80 | 19.40 | 22.26 |
| | P | | 3.47 | 3.49 | 3.54 | 3.60 | 3.68 | 3.77 | 3.85 | 3.92 | 3.98 | 4.02 |
| | Q | 70℃ | 7.70 | 7.95 | 8.64 | 9.72 | 11.18 | 13.00 | 15.16 | 17.63 | 20.38 | 23.41 |
| | P | | 3.19 | 3.21 | 3.25 | 3.32 | 3.39 | 3.47 | 3.55 | 3.63 | 3.68 | 3.72 |
| | Q | 65℃ | 7.80 | 8.13 | 8.89 | 10.07 | 11.64 | 13.57 | 15.86 | 18.46 | 21.37 | 24.56 |
| | P | | 2.93 | 2.94 | 2.99 | 3.05 | 3.12 | 3.19 | 3.27 | 3.34 | 3.39 | 3.43 |
| | Q | 60℃ | 7.93 | 8.32 | 9.17 | 10.43 | 12.10 | 14.15 | 16.56 | 19.31 | 22.36 | 25.71 |
| | P | | 2.68 | 2.69 | 2.73 | 2.79 | 2.86 | 2.93 | 3.00 | 3.07 | 3.12 | 3.15 |
| | Q | 55℃ | 8.08 | 8.54 | 9.45 | 10.81 | 12.57 | 14.73 | 17.26 | 20.14 | 23.35 | |
| | P | | 2.46 | 2.46 | 2.50 | 2.55 | 2.61 | 2.68 | 2.75 | 2.81 | 2.86 | |
| | Q | 50℃ | 8.24 | 8.75 | 9.74 | 11.18 | 13.04 | 15.31 | 17.96 | 20.97 | | |
| | P | | 2.25 | 2.25 | 2.28 | 2.33 | 2.39 | 2.45 | 2.52 | 2.57 | | |
| | Q | 45℃ | 8.40 | 8.98 | 10.04 | 11.55 | 13.51 | 15.88 | 18.65 | | | |
| | P | | 2.07 | 2.07 | 2.09 | 2.13 | 2.18 | 2.24 | 2.30 | | | |
| | Q | 40℃ | 8.57 | 9.20 | 10.32 | 11.92 | 13.96 | 16.44 | | | | |
| | P | | 1.92 | 1.91 | 1.92 | 1.96 | 2.01 | 2.06 | | | | |
| | Q | 35℃ | 8.73 | 9.41 | 10.60 | 12.27 | 14.40 | | | | | |
| | P | | 1.79 | 1.78 | 1.79 | 1.82 | 1.86 | | | | | |
| | Q | 30℃ | 8.89 | 9.61 | 10.86 | 12.60 | | | | | | |
| | P | | 1.70 | 1.68 | 1.68 | 1.71 | | | | | | |

注：冷凝器出口过冷度5. 0K, 过热度5. 0K

*Note：Condenser Outlet Subcooling 5.0K,Subheating 5.0K*

# 制热量
## Heating Capacity

**WW** — **R515B**

带喷气增焓 *EVI*

制热量 HEATING CAPACITY

| 型号 Model | 项目 Item (KW) | Tc\Te | -5℃ | 0℃ | 5℃ | 10℃ | 15℃ | 20℃ | 25℃ | 30℃ | 35℃ | 40℃ |
|---|---|---|---|---|---|---|---|---|---|---|---|---|
| WW160KB-TFD-GV1 | Q | 100℃ | 10.09 | 9.81 | 9.97 | 10.56 | 11.54 | 12.89 | 14.58 | 16.58 | 18.85 | 21.38 |
| | P | | 6.33 | 6.37 | 6.45 | 6.54 | 6.65 | 6.77 | 6.89 | 6.99 | 7.08 | 7.14 |
| | Q | 95℃ | 9.89 | 9.71 | 10.01 | 10.74 | 11.88 | 13.40 | 15.28 | 17.48 | 19.97 | 22.73 |
| | P | | 5.94 | 5.98 | 6.06 | 6.15 | 6.26 | 6.38 | 6.49 | 6.60 | 6.68 | 6.74 |
| | Q | 90℃ | 9.76 | 9.69 | 10.11 | 10.98 | 12.27 | 13.97 | 16.02 | 18.42 | 21.13 | 24.12 |
| | P | | 5.56 | 5.59 | 5.66 | 5.76 | 5.87 | 5.98 | 6.10 | 6.20 | 6.28 | 6.34 |
| | Q | 85℃ | 9.69 | 9.73 | 10.27 | 11.28 | 12.72 | 14.58 | 16.81 | 19.41 | 22.32 | 25.54 |
| | P | | 5.17 | 5.21 | 5.28 | 5.37 | 5.47 | 5.59 | 5.70 | 5.80 | 5.88 | 5.94 |
| | Q | 80℃ | 9.69 | 9.83 | 10.48 | 11.62 | 13.21 | 15.23 | 17.64 | 20.42 | 23.55 | 26.98 |
| | P | | 4.80 | 4.83 | 4.89 | 4.98 | 5.09 | 5.20 | 5.31 | 5.40 | 5.48 | 5.54 |
| | Q | 75℃ | 9.74 | 9.98 | 10.74 | 12.01 | 13.74 | 15.91 | 18.50 | 21.47 | 24.79 | 28.45 |
| | P | | 4.43 | 4.46 | 4.52 | 4.61 | 4.71 | 4.81 | 4.92 | 5.01 | 5.09 | 5.14 |
| | Q | 70℃ | 9.84 | 10.17 | 11.04 | 12.43 | 14.30 | 16.62 | 19.38 | 22.53 | 26.05 | 29.92 |
| | P | | 4.08 | 4.10 | 4.16 | 4.24 | 4.34 | 4.44 | 4.54 | 4.64 | 4.71 | 4.76 |
| | Q | 65℃ | 9.97 | 10.39 | 11.37 | 12.87 | 14.87 | 17.35 | 20.27 | 23.60 | 27.32 | 31.39 |
| | P | | 3.74 | 3.76 | 3.82 | 3.89 | 3.98 | 4.08 | 4.18 | 4.27 | 4.34 | 4.38 |
| | Q | 60℃ | 10.14 | 10.64 | 11.72 | 13.33 | 15.47 | 18.09 | 21.17 | 24.67 | 28.58 | 32.86 |
| | P | | 3.43 | 3.44 | 3.49 | 3.56 | 3.65 | 3.74 | 3.84 | 3.92 | 3.99 | 4.02 |
| | Q | 55℃ | 10.32 | 10.91 | 12.08 | 13.81 | 16.07 | 18.83 | 22.07 | 25.74 | 29.84 | |
| | P | | 3.14 | 3.15 | 3.19 | 3.26 | 3.34 | 3.43 | 3.51 | 3.59 | 3.65 | |
| | Q | 50℃ | 10.53 | 11.19 | 12.45 | 14.29 | 16.67 | 19.57 | 22.96 | 26.80 | | |
| | P | | 2.88 | 2.88 | 2.91 | 2.97 | 3.05 | 3.13 | 3.22 | 3.29 | | |
| | Q | 45℃ | 10.74 | 11.48 | 12.83 | 14.77 | 17.27 | 20.30 | 23.83 | | | |
| | P | | 2.65 | 2.64 | 2.67 | 2.72 | 2.79 | 2.87 | 2.95 | | | |
| | Q | 40℃ | 10.96 | 11.76 | 13.19 | 15.23 | 17.85 | 21.01 | | | | |
| | P | | 2.45 | 2.44 | 2.46 | 2.50 | 2.57 | 2.64 | | | | |
| | Q | 35℃ | 11.16 | 12.03 | 13.55 | 15.68 | 18.40 | | | | | |
| | P | | 2.29 | 2.27 | 2.28 | 2.32 | 2.38 | | | | | |
| | Q | 30℃ | 11.36 | 12.29 | 13.88 | 16.10 | | | | | | |
| | P | | 2.17 | 2.14 | 2.15 | 2.18 | | | | | | |
| WW190KB-TFD-GV1 | Q | 100℃ | 11.37 | 11.77 | 12.57 | 13.75 | 15.26 | 17.07 | 19.14 | 21.44 | 23.92 | 26.54 |
| | P | | 7.41 | 7.52 | 7.65 | 7.77 | 7.90 | 8.01 | 8.09 | 8.15 | 8.18 | 8.16 |
| | Q | 95℃ | 11.09 | 11.48 | 12.32 | 13.56 | 15.18 | 17.13 | 19.38 | 21.89 | 24.63 | 27.54 |
| | P | | 6.97 | 7.07 | 7.18 | 7.30 | 7.41 | 7.51 | 7.59 | 7.65 | 7.67 | 7.65 |
| | Q | 90℃ | 10.95 | 11.34 | 12.21 | 13.53 | 15.26 | 17.36 | 19.79 | 22.52 | 25.51 | 28.72 |
| | P | | 6.52 | 6.61 | 6.71 | 6.81 | 6.92 | 7.01 | 7.09 | 7.14 | 7.16 | 7.14 |
| | Q | 85℃ | 10.92 | 11.32 | 12.23 | 13.63 | 15.47 | 17.73 | 20.35 | 23.30 | 26.55 | 30.06 |
| | P | | 6.08 | 6.15 | 6.24 | 6.34 | 6.43 | 6.52 | 6.59 | 6.64 | 6.66 | 6.64 |
| | Q | 80℃ | 11.00 | 11.41 | 12.37 | 13.85 | 15.81 | 18.22 | 21.03 | 24.22 | 27.73 | 31.55 |
| | P | | 5.64 | 5.70 | 5.78 | 5.86 | 5.95 | 6.04 | 6.10 | 6.15 | 6.17 | 6.15 |
| | Q | 75℃ | 11.17 | 11.58 | 12.60 | 14.16 | 16.25 | 18.82 | 21.83 | 25.25 | 29.04 | 33.16 |
| | P | | 5.21 | 5.26 | 5.33 | 5.41 | 5.49 | 5.56 | 5.63 | 5.67 | 5.69 | 5.67 |
| | Q | 70℃ | 11.40 | 11.83 | 12.90 | 14.56 | 16.78 | 19.51 | 22.72 | 26.38 | 30.45 | 34.88 |
| | P | | 4.80 | 4.83 | 4.89 | 4.96 | 5.04 | 5.11 | 5.17 | 5.22 | 5.23 | 5.22 |
| | Q | 65℃ | 11.68 | 12.14 | 13.27 | 15.02 | 17.37 | 20.28 | 23.70 | 27.60 | 31.94 | 36.69 |
| | P | | 4.40 | 4.43 | 4.48 | 4.54 | 4.61 | 4.68 | 4.74 | 4.78 | 4.80 | 4.79 |
| | Q | 60℃ | 11.99 | 12.48 | 13.67 | 15.53 | 18.02 | 21.10 | 24.73 | 28.88 | 33.51 | 38.58 |
| | P | | 4.03 | 4.05 | 4.09 | 4.15 | 4.21 | 4.28 | 4.34 | 4.38 | 4.40 | 4.39 |
| | Q | 55℃ | 12.32 | 12.84 | 14.10 | 16.07 | 18.70 | 21.96 | 25.80 | 30.21 | 35.12 | |
| | P | | 3.69 | 3.69 | 3.73 | 3.78 | 3.84 | 3.91 | 3.96 | 4.01 | 4.03 | |
| | Q | 50℃ | 12.65 | 13.21 | 14.54 | 16.62 | 19.39 | 22.84 | 26.91 | 31.56 | | |
| | P | | 3.38 | 3.38 | 3.40 | 3.45 | 3.51 | 3.57 | 3.63 | 3.67 | | |
| | Q | 45℃ | 12.96 | 13.56 | 14.97 | 17.16 | 20.09 | 23.72 | 28.01 | | | |
| | P | | 3.10 | 3.09 | 3.12 | 3.16 | 3.21 | 3.28 | 3.33 | | | |
| | Q | 40℃ | 13.23 | 13.87 | 15.37 | 17.68 | 20.77 | 24.59 | | | | |
| | P | | 2.87 | 2.86 | 2.87 | 2.91 | 2.97 | 3.03 | | | | |
| | Q | 35℃ | 13.44 | 14.14 | 15.73 | 18.16 | 21.41 | | | | | |
| | P | | 2.69 | 2.67 | 2.68 | 2.71 | 2.77 | | | | | |
| | Q | 30℃ | 13.59 | 14.34 | 16.02 | 18.58 | | | | | | |
| | P | | 2.55 | 2.53 | 2.54 | 2.57 | | | | | | |

注：冷凝器出口过冷度5. 0K, 过热度5. 0K

*Note：Condenser Outlet Subcooling 5.0K,Subheating 5.0K*



**R515B** — **WW**

带喷气增焓 *EVI*

# 制热量
## Heating Capacity

制热量 HEATING CAPACITY

| 型号 Model | 项目 Item (KW) | Tc\Te | -5℃ | 0℃ | 5℃ | 10℃ | 15℃ | 20℃ | 25℃ | 30℃ | 35℃ | 40℃ |
|---|---|---|---|---|---|---|---|---|---|---|---|---|
| WW240KB-TFD-GV1 | Q | 100℃ | 14.88 | 15.39 | 16.44 | 17.98 | 19.96 | 22.33 | 25.04 | 28.04 | 31.28 | 34.72 |
| | P | | 9.69 | 9.84 | 10.00 | 10.17 | 10.33 | 10.47 | 10.59 | 10.67 | 10.70 | 10.67 |
| | Q | 95℃ | 14.51 | 15.02 | 16.11 | 17.74 | 19.86 | 22.41 | 25.35 | 28.63 | 32.21 | 36.02 |
| | P | | 9.11 | 9.24 | 9.39 | 9.54 | 9.69 | 9.82 | 9.93 | 10.00 | 10.03 | 10.00 |
| | Q | 90℃ | 14.32 | 14.83 | 15.97 | 17.70 | 19.96 | 22.70 | 25.89 | 29.46 | 33.37 | 37.57 |
| | P | | 8.53 | 8.64 | 8.77 | 8.91 | 9.05 | 9.17 | 9.27 | 9.34 | 9.36 | 9.34 |
| | Q | 85℃ | 14.29 | 14.80 | 16.00 | 17.83 | 20.24 | 23.18 | 26.61 | 30.48 | 34.73 | 39.32 |
| | P | | 7.95 | 8.05 | 8.16 | 8.29 | 8.41 | 8.53 | 8.62 | 8.68 | 8.71 | 8.68 |
| | Q | 80℃ | 14.39 | 14.92 | 16.18 | 18.11 | 20.68 | 23.83 | 27.51 | 31.67 | 36.27 | 41.26 |
| | P | | 7.38 | 7.46 | 7.56 | 7.67 | 7.79 | 7.89 | 7.98 | 8.04 | 8.06 | 8.04 |
| | Q | 75℃ | 14.60 | 15.15 | 16.47 | 18.52 | 21.25 | 24.61 | 28.55 | 33.02 | 37.98 | 43.37 |
| | P | | 6.82 | 6.88 | 6.97 | 7.07 | 7.18 | 7.28 | 7.36 | 7.42 | 7.44 | 7.42 |
| | Q | 70℃ | 14.91 | 15.48 | 16.87 | 19.04 | 21.94 | 25.52 | 29.72 | 34.50 | 39.82 | 45.62 |
| | P | | 6.28 | 6.32 | 6.40 | 6.49 | 6.59 | 6.68 | 6.77 | 6.82 | 6.85 | 6.82 |
| | Q | 65℃ | 15.27 | 15.88 | 17.35 | 19.65 | 22.72 | 26.52 | 30.99 | 36.09 | 41.78 | 47.99 |
| | P | | 5.76 | 5.79 | 5.86 | 5.94 | 6.03 | 6.12 | 6.20 | 6.26 | 6.28 | 6.26 |
| | Q | 60℃ | 15.68 | 16.32 | 17.88 | 20.31 | 23.56 | 27.59 | 32.34 | 37.77 | 43.82 | 50.45 |
| | P | | 5.27 | 5.29 | 5.35 | 5.42 | 5.51 | 5.59 | 5.67 | 5.73 | 5.75 | 5.74 |
| | Q | 55℃ | 16.12 | 16.80 | 18.45 | 21.01 | 24.45 | 28.71 | 33.75 | 39.51 | 45.94 | |
| | P | | 4.82 | 4.83 | 4.88 | 4.94 | 5.02 | 5.11 | 5.18 | 5.24 | 5.27 | |
| | Q | 50℃ | 16.54 | 17.27 | 19.02 | 21.73 | 25.36 | 29.87 | 35.19 | 41.28 | | |
| | P | | 4.42 | 4.42 | 4.45 | 4.51 | 4.59 | 4.67 | 4.75 | 4.81 | | |
| | Q | 45℃ | 16.95 | 17.73 | 19.58 | 22.44 | 26.27 | 31.02 | 36.64 | | | |
| | P | | 4.06 | 4.05 | 4.08 | 4.13 | 4.20 | 4.28 | 4.36 | | | |
| | Q | 40℃ | 17.30 | 18.15 | 20.10 | 23.12 | 27.16 | 32.16 | | | | |
| | P | | 3.75 | 3.74 | 3.76 | 3.81 | 3.88 | 3.96 | | | | |
| | Q | 35℃ | 17.58 | 18.50 | 20.57 | 23.75 | 28.00 | | | | | |
| | P | | 3.51 | 3.49 | 3.50 | 3.55 | 3.62 | | | | | |
| | Q | 30℃ | 17.77 | 18.76 | 20.95 | 24.31 | | | | | | |
| | P | | 3.34 | 3.31 | 3.32 | 3.36 | | | | | | |
| WW280KB-TFD-GV1 | Q | 100℃ | 17.09 | 17.68 | 18.89 | 20.66 | 22.93 | 25.65 | 28.76 | 32.20 | 35.93 | 39.88 |
| | P | | 11.13 | 11.30 | 11.49 | 11.68 | 11.86 | 12.03 | 12.16 | 12.25 | 12.29 | 12.26 |
| | Q | 95℃ | 16.67 | 17.25 | 18.51 | 20.38 | 22.81 | 25.74 | 29.12 | 32.89 | 37.00 | 41.38 |
| | P | | 10.47 | 10.62 | 10.79 | 10.96 | 11.13 | 11.28 | 11.41 | 11.49 | 11.52 | 11.49 |
| | Q | 90℃ | 16.45 | 17.03 | 18.35 | 20.33 | 22.92 | 26.08 | 29.73 | 33.84 | 38.33 | 43.15 |
| | P | | 9.80 | 9.93 | 10.08 | 10.24 | 10.39 | 10.53 | 10.65 | 10.73 | 10.76 | 10.72 |
| | Q | 85℃ | 16.41 | 17.01 | 18.38 | 20.48 | 23.25 | 26.63 | 30.57 | 35.01 | 39.89 | 45.16 |
| | P | | 9.14 | 9.24 | 9.38 | 9.52 | 9.66 | 9.79 | 9.90 | 9.98 | 10.00 | 9.97 |
| | Q | 80℃ | 16.53 | 17.14 | 18.58 | 20.80 | 23.75 | 27.37 | 31.60 | 36.38 | 41.67 | 47.39 |
| | P | | 8.48 | 8.57 | 8.68 | 8.81 | 8.94 | 9.07 | 9.17 | 9.24 | 9.26 | 9.23 |
| | Q | 75℃ | 16.78 | 17.40 | 18.92 | 21.28 | 24.41 | 28.27 | 32.80 | 37.93 | 43.63 | 49.81 |
| | P | | 7.83 | 7.90 | 8.00 | 8.12 | 8.24 | 8.36 | 8.46 | 8.52 | 8.55 | 8.52 |
| | Q | 70℃ | 17.12 | 17.78 | 19.38 | 21.88 | 25.20 | 29.31 | 34.14 | 39.64 | 45.74 | 52.40 |
| | P | | 7.21 | 7.26 | 7.35 | 7.46 | 7.57 | 7.68 | 7.77 | 7.84 | 7.86 | 7.84 |
| | Q | 65℃ | 17.55 | 18.24 | 19.93 | 22.57 | 26.10 | 30.46 | 35.60 | 41.46 | 47.99 | 55.12 |
| | P | | 6.61 | 6.65 | 6.73 | 6.82 | 6.93 | 7.03 | 7.12 | 7.19 | 7.21 | 7.19 |
| | Q | 60℃ | 18.02 | 18.75 | 20.54 | 23.33 | 27.07 | 31.69 | 37.15 | 43.39 | 50.34 | 57.96 |
| | P | | 6.06 | 6.08 | 6.14 | 6.23 | 6.33 | 6.43 | 6.51 | 6.58 | 6.61 | 6.59 |
| | Q | 55℃ | 18.51 | 19.29 | 21.19 | 24.14 | 28.09 | 32.98 | 38.77 | 45.38 | 52.77 | |
| | P | | 5.54 | 5.55 | 5.60 | 5.68 | 5.77 | 5.87 | 5.95 | 6.02 | 6.06 | |
| | Q | 50℃ | 19.00 | 19.84 | 21.85 | 24.96 | 29.14 | 34.31 | 40.42 | 47.42 | | |
| | P | | 5.07 | 5.07 | 5.11 | 5.18 | 5.27 | 5.36 | 5.45 | 5.52 | | |
| | Q | 45℃ | 19.47 | 20.37 | 22.49 | 25.78 | 30.18 | 35.64 | 42.09 | | | |
| | P | | 4.66 | 4.65 | 4.68 | 4.75 | 4.83 | 4.92 | 5.01 | | | |
| | Q | 40℃ | 19.87 | 20.84 | 23.09 | 26.56 | 31.20 | 36.94 | | | | |
| | P | | 4.31 | 4.29 | 4.32 | 4.38 | 4.46 | 4.55 | | | | |
| | Q | 35℃ | 20.20 | 21.25 | 23.63 | 27.29 | 32.16 | | | | | |
| | P | | 4.04 | 4.01 | 4.02 | 4.08 | 4.16 | | | | | |
| | Q | 30℃ | 20.42 | 21.55 | 24.07 | 27.92 | | | | | | |
| | P | | 3.84 | 3.80 | 3.81 | 3.86 | | | | | | |

注：冷凝器出口过冷度5. 0K, 过热度5. 0K

*Note：Condenser Outlet Subcooling 5.0K,Subheating 5.0K*

# 制热量
## Heating Capacity

制热量 HEATING CAPACITY

**WW** R515B

带喷气增焓 *EVI*

| 型号 Model | 项目 Item (KW) | Tc\Te | -5℃ | 0℃ | 5℃ | 10℃ | 15℃ | 20℃ | 25℃ | 30℃ | 35℃ | 40℃ |
|---|---|---|---|---|---|---|---|---|---|---|---|---|
| WW360KB-TFD-GV1 | Q | 100℃ | 22.29 | 23.06 | 24.64 | 26.94 | 29.91 | 33.46 | 37.52 | 42.01 | 46.87 | 52.02 |
| | P | | 14.52 | 14.74 | 14.99 | 15.24 | 15.48 | 15.69 | 15.86 | 15.98 | 16.03 | 15.99 |
| | Q | 95℃ | 21.74 | 22.50 | 24.14 | 26.58 | 29.75 | 33.58 | 37.99 | 42.91 | 48.26 | 53.98 |
| | P | | 13.66 | 13.85 | 14.07 | 14.30 | 14.52 | 14.72 | 14.88 | 14.99 | 15.03 | 14.99 |
| | Q | 90℃ | 21.46 | 22.22 | 23.93 | 26.52 | 29.91 | 34.02 | 38.79 | 44.14 | 50.00 | 56.29 |
| | P | | 12.79 | 12.95 | 13.15 | 13.35 | 13.56 | 13.74 | 13.89 | 14.00 | 14.03 | 13.99 |
| | Q | 85℃ | 21.41 | 22.18 | 23.98 | 26.71 | 30.33 | 34.74 | 39.88 | 45.67 | 52.04 | 58.92 |
| | P | | 11.92 | 12.06 | 12.23 | 12.42 | 12.60 | 12.78 | 12.92 | 13.01 | 13.05 | 13.01 |
| | Q | 80℃ | 21.56 | 22.36 | 24.24 | 27.14 | 30.99 | 35.70 | 41.22 | 47.46 | 54.36 | 61.83 |
| | P | | 11.06 | 11.17 | 11.32 | 11.49 | 11.67 | 11.83 | 11.96 | 12.05 | 12.08 | 12.04 |
| | Q | 75℃ | 21.88 | 22.70 | 24.69 | 27.76 | 31.85 | 36.88 | 42.79 | 49.49 | 56.91 | 64.98 |
| | P | | 10.22 | 10.31 | 10.44 | 10.59 | 10.75 | 10.90 | 11.03 | 11.12 | 11.15 | 11.11 |
| | Q | 70℃ | 22.34 | 23.19 | 25.28 | 28.54 | 32.88 | 38.24 | 44.54 | 51.71 | 59.67 | 68.36 |
| | P | | 9.40 | 9.48 | 9.59 | 9.73 | 9.87 | 10.02 | 10.14 | 10.22 | 10.26 | 10.22 |
| | Q | 65℃ | 22.89 | 23.79 | 26.00 | 29.44 | 34.04 | 39.74 | 46.44 | 54.09 | 62.60 | 71.91 |
| | P | | 8.63 | 8.68 | 8.78 | 8.90 | 9.04 | 9.17 | 9.29 | 9.38 | 9.41 | 9.38 |
| | Q | 60℃ | 23.50 | 24.46 | 26.80 | 30.44 | 35.31 | 41.34 | 48.46 | 56.60 | 65.67 | 75.60 |
| | P | | 7.90 | 7.93 | 8.01 | 8.13 | 8.25 | 8.38 | 8.50 | 8.58 | 8.62 | 8.60 |
| | Q | 55℃ | 24.15 | 25.17 | 27.64 | 31.49 | 36.64 | 43.03 | 50.57 | 59.20 | 68.84 | |
| | P | | 7.23 | 7.24 | 7.31 | 7.41 | 7.53 | 7.65 | 7.77 | 7.86 | 7.90 | |
| | Q | 50℃ | 24.79 | 25.88 | 28.50 | 32.57 | 38.01 | 44.75 | 52.73 | 61.86 | | |
| | P | | 6.62 | 6.62 | 6.67 | 6.76 | 6.88 | 7.00 | 7.11 | 7.20 | | |
| | Q | 45℃ | 25.39 | 26.57 | 29.34 | 33.63 | 39.37 | 46.49 | 54.90 | | | |
| | P | | 6.08 | 6.07 | 6.11 | 6.19 | 6.30 | 6.42 | 6.54 | | | |
| | Q | 40℃ | 25.92 | 27.19 | 30.13 | 34.65 | 40.70 | 48.19 | | | | |
| | P | | 5.63 | 5.60 | 5.63 | 5.71 | 5.81 | 5.93 | | | | |
| | Q | 35℃ | 26.35 | 27.72 | 30.82 | 35.59 | 41.96 | | | | | |
| | P | | 5.26 | 5.23 | 5.25 | 5.32 | 5.42 | | | | | |
| | Q | 30℃ | 26.63 | 28.11 | 31.40 | 36.42 | | | | | | |
| | P | | 5.00 | 4.95 | 4.97 | 5.04 | | | | | | |
| WW470KB -TWD-GV1 | Q | 100℃ | 29.11 | 30.11 | 32.17 | 35.18 | 39.05 | 43.69 | 48.99 | 54.86 | 61.20 | 67.93 |
| | P | | 18.96 | 19.25 | 19.57 | 19.89 | 20.21 | 20.49 | 20.71 | 20.87 | 20.93 | 20.88 |
| | Q | 95℃ | 28.39 | 29.38 | 31.52 | 34.71 | 38.85 | 43.85 | 49.61 | 56.03 | 63.02 | 70.49 |
| | P | | 17.83 | 18.09 | 18.37 | 18.67 | 18.96 | 19.22 | 19.43 | 19.57 | 19.62 | 19.57 |
| | Q | 90℃ | 28.02 | 29.02 | 31.25 | 34.63 | 39.05 | 44.42 | 50.65 | 57.64 | 65.28 | 73.50 |
| | P | | 16.70 | 16.91 | 17.17 | 17.44 | 17.70 | 17.94 | 18.14 | 18.27 | 18.32 | 18.27 |
| | Q | 85℃ | 27.96 | 28.97 | 31.31 | 34.88 | 39.60 | 45.36 | 52.07 | 59.63 | 67.95 | 76.93 |
| | P | | 15.56 | 15.74 | 15.97 | 16.21 | 16.46 | 16.68 | 16.87 | 16.99 | 17.04 | 16.98 |
| | Q | 80℃ | 28.16 | 29.19 | 31.65 | 35.44 | 40.46 | 46.62 | 53.82 | 61.97 | 70.97 | 80.73 |
| | P | | 14.44 | 14.59 | 14.79 | 15.01 | 15.23 | 15.44 | 15.62 | 15.74 | 15.78 | 15.73 |
| | Q | 75℃ | 28.58 | 29.64 | 32.23 | 36.25 | 41.59 | 48.16 | 55.87 | 64.62 | 74.31 | 84.85 |
| | P | | 13.34 | 13.46 | 13.63 | 13.83 | 14.04 | 14.24 | 14.40 | 14.52 | 14.56 | 14.51 |
| | Q | 70℃ | 29.17 | 30.28 | 33.01 | 37.26 | 42.93 | 49.93 | 58.15 | 67.51 | 77.91 | 89.25 |
| | P | | 12.28 | 12.37 | 12.52 | 12.70 | 12.89 | 13.08 | 13.24 | 13.35 | 13.39 | 13.35 |
| | Q | 65℃ | 29.89 | 31.06 | 33.95 | 38.44 | 44.45 | 51.89 | 60.64 | 70.62 | 81.74 | 93.89 |
| | P | | 11.27 | 11.33 | 11.46 | 11.62 | 11.80 | 11.98 | 12.13 | 12.24 | 12.29 | 12.25 |
| | Q | 60℃ | 30.69 | 31.94 | 34.99 | 39.74 | 46.11 | 53.99 | 63.28 | 73.90 | 85.75 | 98.72 |
| | P | | 10.31 | 10.36 | 10.46 | 10.61 | 10.78 | 10.95 | 11.10 | 11.21 | 11.26 | 11.23 |
| | Q | 55℃ | 31.53 | 32.86 | 36.09 | 41.12 | 47.85 | 56.18 | 66.03 | 77.30 | 89.88 | |
| | P | | 9.43 | 9.46 | 9.54 | 9.67 | 9.83 | 9.99 | 10.14 | 10.26 | 10.32 | |
| | Q | 50℃ | 32.37 | 33.80 | 37.21 | 42.52 | 49.63 | 58.44 | 68.85 | 80.78 | | |
| | P | | 8.64 | 8.64 | 8.71 | 8.83 | 8.98 | 9.14 | 9.29 | 9.40 | | |
| | Q | 45℃ | 33.16 | 34.69 | 38.31 | 43.91 | 51.41 | 60.70 | 71.69 | | | |
| | P | | 7.94 | 7.92 | 7.98 | 8.08 | 8.23 | 8.38 | 8.53 | | | |
| | Q | 40℃ | 33.85 | 35.51 | 39.34 | 45.25 | 53.14 | 62.93 | | | | |
| | P | | 7.35 | 7.31 | 7.35 | 7.45 | 7.59 | 7.75 | | | | |
| | Q | 35℃ | 34.41 | 36.19 | 40.25 | 46.48 | 54.78 | | | | | |
| | P | | 6.87 | 6.82 | 6.85 | 6.95 | 7.08 | | | | | |
| | Q | 30℃ | 34.78 | 36.70 | 41.00 | 47.56 | | | | | | |
| | P | | 6.53 | 6.47 | 6.49 | 6.58 | | | | | | |

注：冷凝器出口过冷度5. 0K, 过热度5. 0K

*Note：Condenser Outlet Subcooling 5.0K,Subheating 5.0K*



R515B **WW**

带喷气增焓 *EVI*


# 制热量
## Heating Capacity

制热量 HEATING CAPACITY


| 型号 Model | 项目 Item (KW) | Tc\Te | -5℃ | 0℃ | 5℃ | 10℃ | 15℃ | 20℃ | 25℃ | 30℃ | 35℃ | 40℃ |
|---|---|---|---|---|---|---|---|---|---|---|---|---|
| WW600KB -TWD-GV1 | Q | 100℃ | 35.82 | 37.06 | 39.60 | 43.30 | 48.07 | 53.77 | 60.29 | 67.52 | 75.33 | 83.60 |
| | P | | 23.34 | 23.69 | 24.09 | 24.49 | 24.87 | 25.21 | 25.49 | 25.68 | 25.76 | 25.70 |
| | Q | 95℃ | 34.94 | 36.16 | 38.80 | 42.72 | 47.82 | 53.97 | 61.05 | 68.96 | 77.56 | 86.75 |
| | P | | 21.95 | 22.26 | 22.61 | 22.98 | 23.33 | 23.65 | 23.91 | 24.09 | 24.15 | 24.09 |
| | Q | 90℃ | 34.48 | 35.71 | 38.46 | 42.62 | 48.06 | 54.67 | 62.34 | 70.94 | 80.35 | 90.46 |
| | P | | 20.55 | 20.82 | 21.13 | 21.46 | 21.79 | 22.09 | 22.33 | 22.49 | 22.55 | 22.48 |
| | Q | 85℃ | 34.41 | 35.65 | 38.53 | 42.93 | 48.74 | 55.83 | 64.09 | 73.39 | 83.63 | 94.68 |
| | P | | 19.15 | 19.38 | 19.65 | 19.96 | 20.26 | 20.53 | 20.76 | 20.91 | 20.97 | 20.90 |
| | Q | 80℃ | 34.65 | 35.93 | 38.95 | 43.62 | 49.80 | 57.38 | 66.24 | 76.28 | 87.35 | 99.36 |
| | P | | 17.77 | 17.96 | 18.20 | 18.47 | 18.75 | 19.01 | 19.22 | 19.37 | 19.42 | 19.36 |
| | Q | 75℃ | 35.17 | 36.49 | 39.67 | 44.61 | 51.18 | 59.27 | 68.76 | 79.53 | 91.46 | 104.43 |
| | P | | 16.42 | 16.57 | 16.78 | 17.03 | 17.28 | 17.52 | 17.73 | 17.87 | 17.92 | 17.86 |
| | Q | 70℃ | 35.90 | 37.27 | 40.63 | 45.86 | 52.84 | 61.45 | 71.57 | 83.09 | 95.89 | 109.85 |
| | P | | 15.11 | 15.23 | 15.41 | 15.63 | 15.87 | 16.10 | 16.29 | 16.43 | 16.48 | 16.43 |
| | Q | 65℃ | 36.78 | 38.23 | 41.78 | 47.31 | 54.71 | 63.86 | 74.63 | 86.92 | 100.60 | 115.56 |
| | P | | 13.87 | 13.95 | 14.10 | 14.30 | 14.53 | 14.74 | 14.93 | 15.07 | 15.13 | 15.08 |
| | Q | 60℃ | 37.77 | 39.31 | 43.06 | 48.91 | 56.75 | 66.44 | 77.89 | 90.95 | 105.53 | 121.50 |
| | P | | 12.69 | 12.75 | 12.88 | 13.06 | 13.26 | 13.47 | 13.66 | 13.79 | 13.86 | 13.83 |
| | Q | 55℃ | 38.81 | 40.45 | 44.42 | 50.61 | 58.89 | 69.15 | 81.27 | 95.14 | 110.63 | |
| | P | | 11.61 | 11.64 | 11.74 | 11.91 | 12.10 | 12.30 | 12.48 | 12.62 | 12.70 | |
| | Q | 50℃ | 39.84 | 41.60 | 45.80 | 52.34 | 61.08 | 71.92 | 84.74 | 99.42 | | |
| | P | | 10.63 | 10.63 | 10.72 | 10.87 | 11.05 | 11.25 | 11.43 | 11.57 | | |
| | Q | 45℃ | 40.81 | 42.70 | 47.15 | 54.05 | 63.27 | 74.71 | 88.24 | | | |
| | P | | 9.77 | 9.75 | 9.82 | 9.95 | 10.13 | 10.32 | 10.50 | | | |
| | Q | 40℃ | 41.66 | 43.70 | 48.41 | 55.69 | 65.41 | 77.45 | | | | |
| | P | | 9.04 | 9.00 | 9.05 | 9.17 | 9.34 | 9.53 | | | | |
| | Q | 35℃ | 42.35 | 44.54 | 49.53 | 57.20 | 67.43 | | | | | |
| | P | | 8.46 | 8.40 | 8.43 | 8.55 | 8.72 | | | | | |
| | Q | 30℃ | 42.80 | 45.18 | 50.46 | 58.53 | | | | | | |
| | P | | 8.04 | 7.96 | 7.99 | 8.09 | | | | | | |


注：冷凝器出口过冷度5. 0K, 过热度5. 0K

*Note：Condenser Outlet Subcooling 5.0K,Subheating 5.0K*

## WW70KB

不带喷气增焓 *W/O EVI*



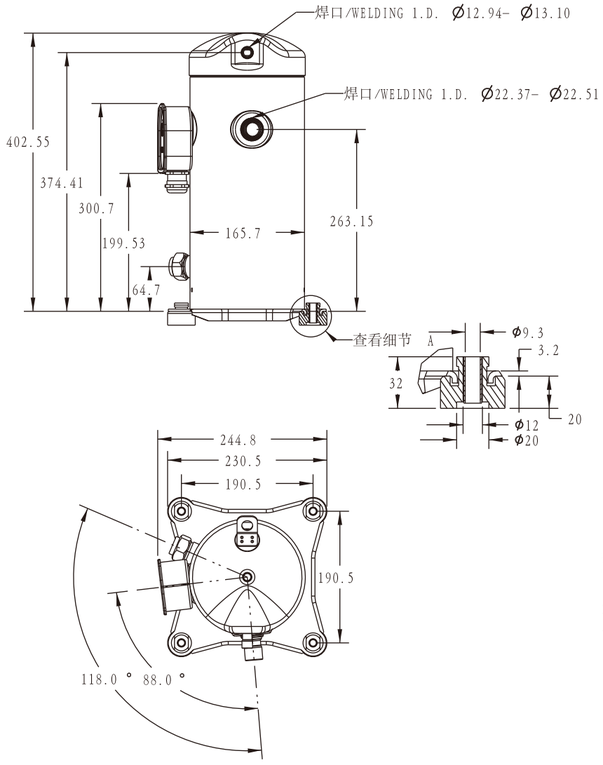


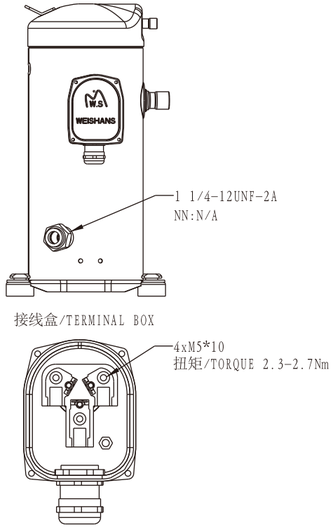


技术要求
Technical requirements
1.未注尺寸单位Unsized unit:mm
2.未注尺寸公差Undimensioned tolerance:+-3mm
3.未注角度公差Angle tolerance without injection:+-3degree



## WW70KB

带喷气增焓机型*EVI*





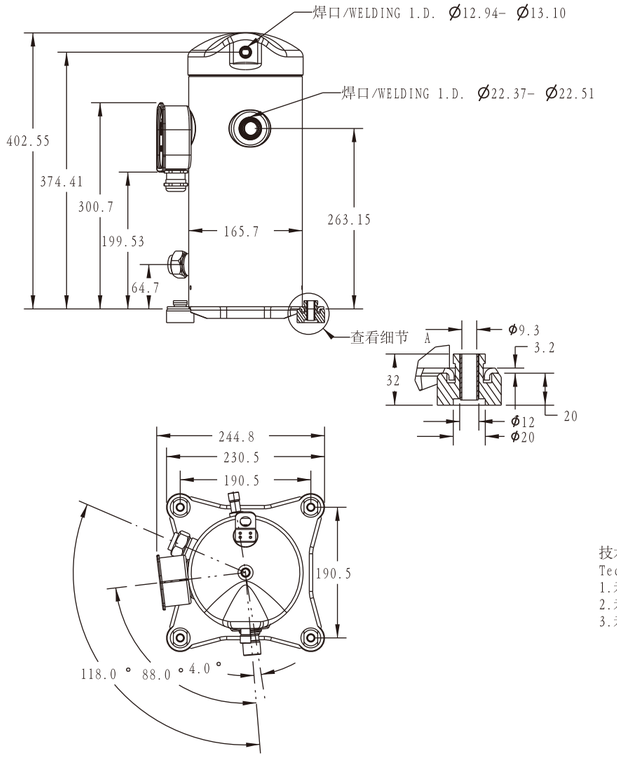


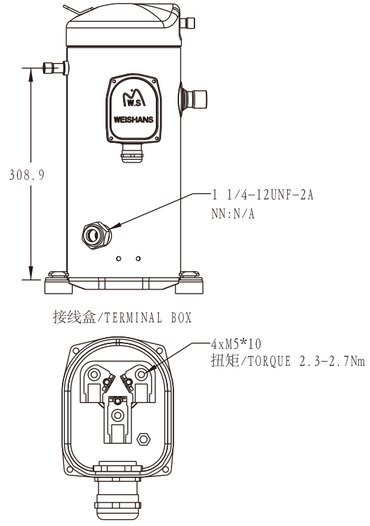


技术要求
Technical requirements
1.未注尺寸单位Unsized unit:mm
2.未注尺寸公差Undimensioned tolerance:+-3mm
3.未注角度公差Angle tolerance without injection:+-3degree

## WW120KB - WW160KB

不带喷气增焓 *W/O EVI*



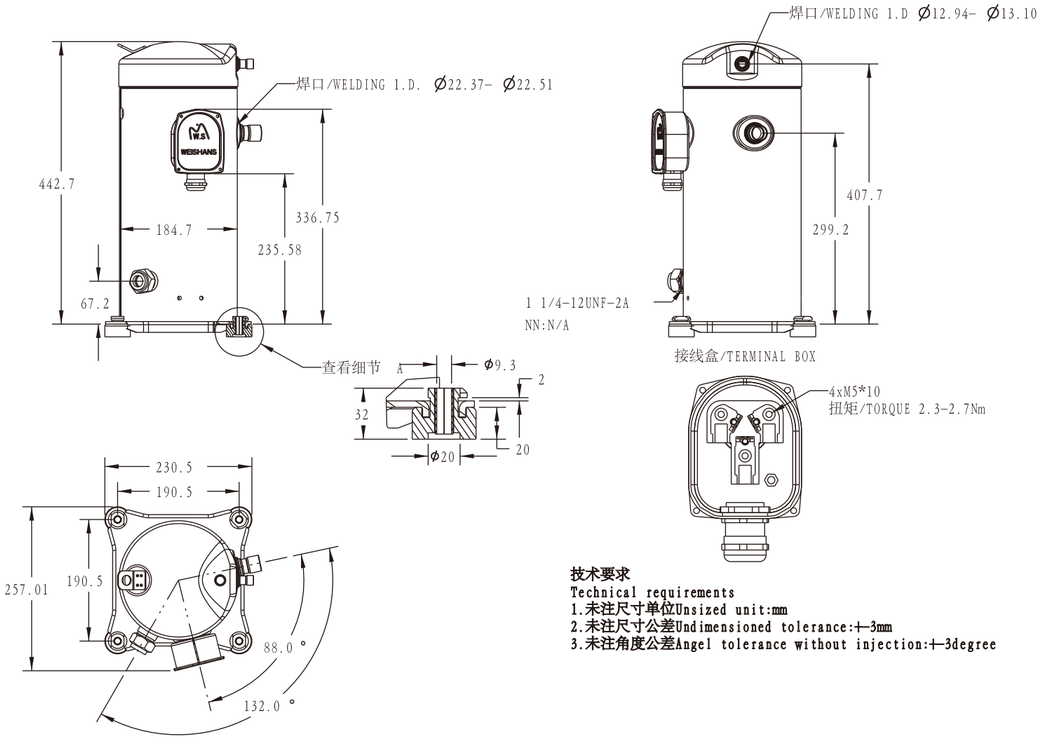


**技术要求**
**Technical requirements**
**1.未注尺寸单位Unsized unit:mm**
**2.未注尺寸公差Undimensioned tolerance:+-3mm**
**3.未注角度公差Angel tolerance without injection:+-3degree**



## WW120KB - WW160KB

带喷气增焓机型*EVI*





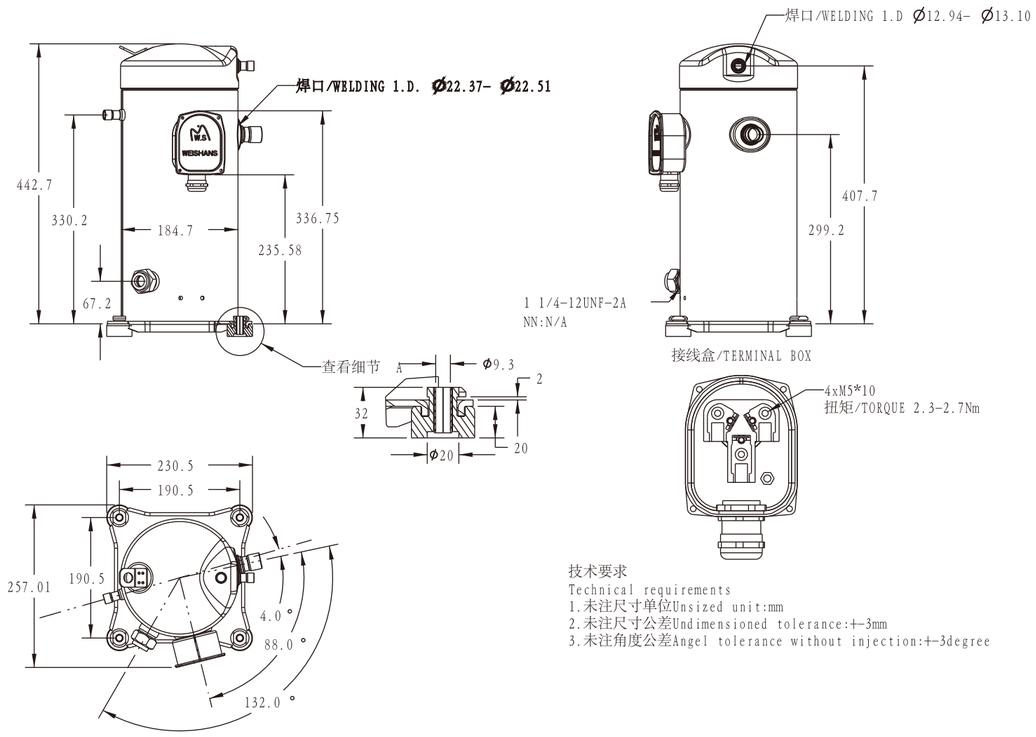


技术要求
Technical requirements
1.未注尺寸单位Unsized unit:mm
2.未注尺寸公差Undimensioned tolerance:+-3mm
3.未注角度公差Angel tolerance without injection:+-3degree

## WW190KB - WW240KB

不带喷气增焓 *W/O EVI*



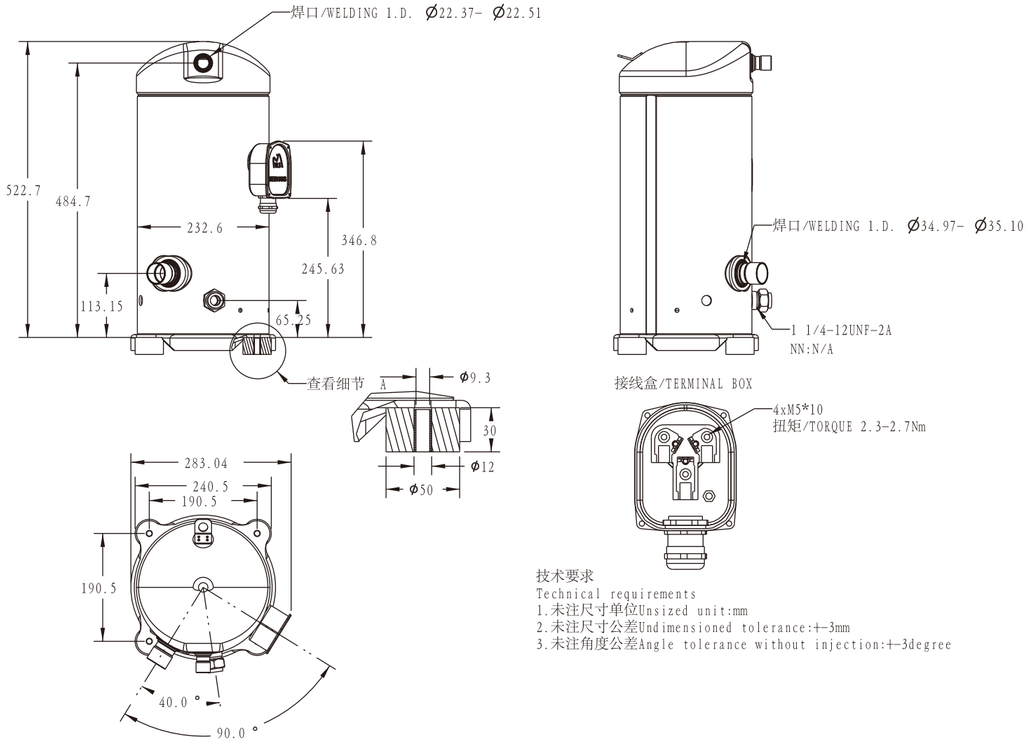


技术要求
Technical requirements
1.未注尺寸单位Unsized unit:mm
2.未注尺寸公差Undimensioned tolerance:+-3mm
3.未注角度公差Angle tolerance without injection:+-3degree



## WW190KB - WW240KB

带喷气增焓机型*EVI*





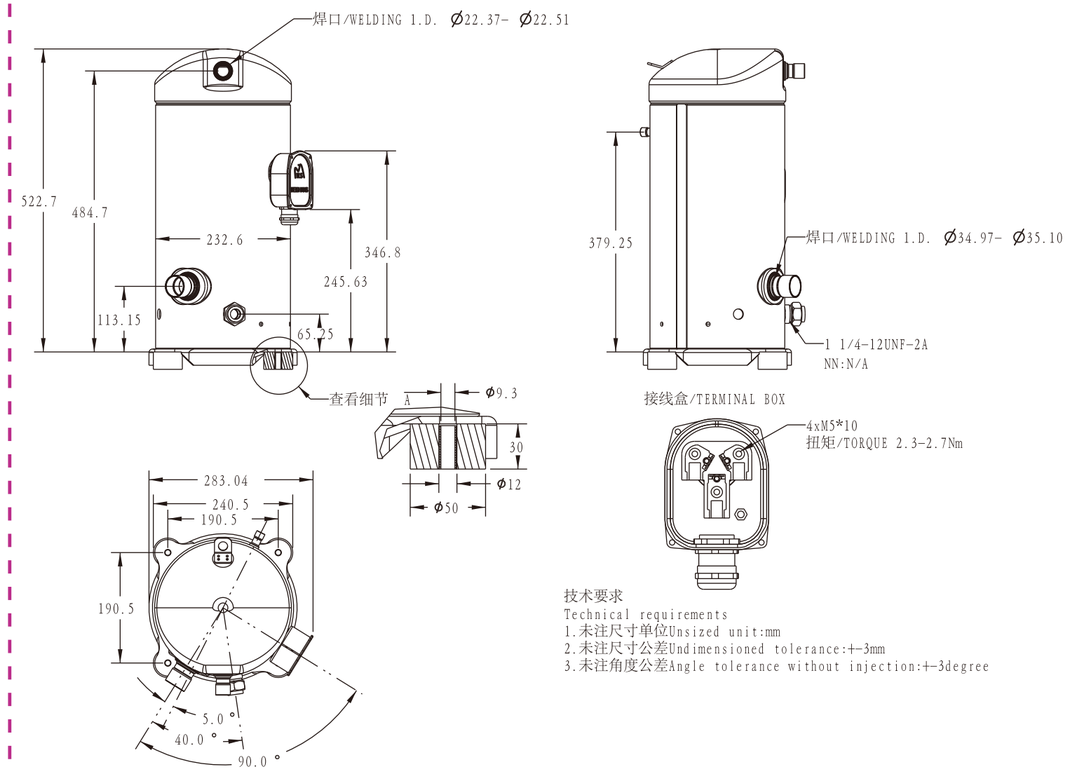


技术要求
Technical requirements
1.未注尺寸单位Unsized unit:mm
2.未注尺寸公差Undimensioned tolerance:+-3mm
3.未注角度公差Angle tolerance without injection:+-3degree

## WW280KB - WW360KB

不带喷气增焓 *W/O EVI*



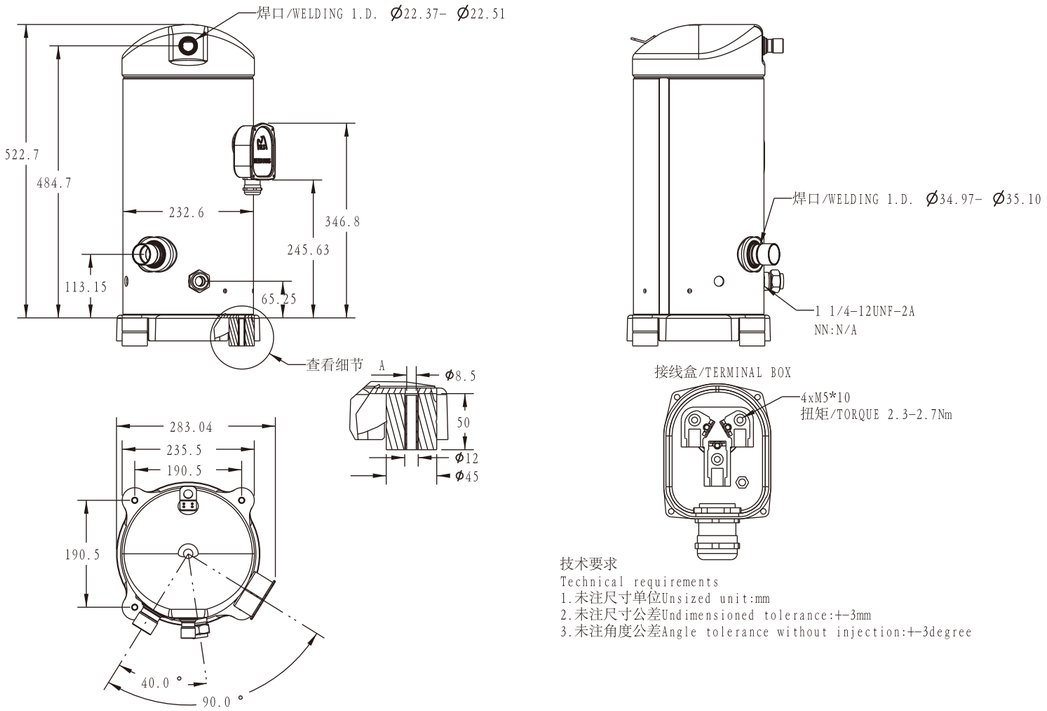


技术要求
Technical requirements
1.未注尺寸单位Unsized unit:mm
2.未注尺寸公差Undimensioned tolerance:+-3mm
3.未注角度公差Angle tolerance without injection:+-3degree



## WW280KB - WW360KB

带喷气增焓机型*EVI*





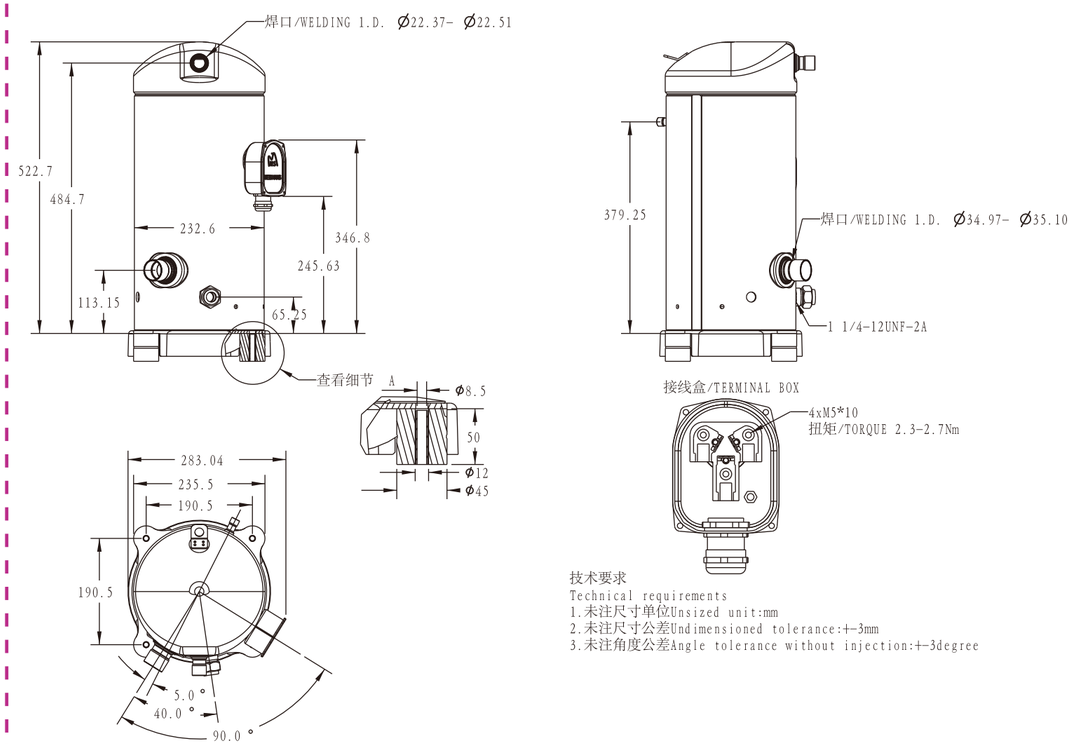


技术要求
Technical requirements
1.未注尺寸单位Unsized unit:mm
2.未注尺寸公差Undimensioned tolerance:+-3mm
3.未注角度公差Angle tolerance without injection:+-3degree

## WW470KB - WW600KB

不带喷气增焓 *W/O EVI*



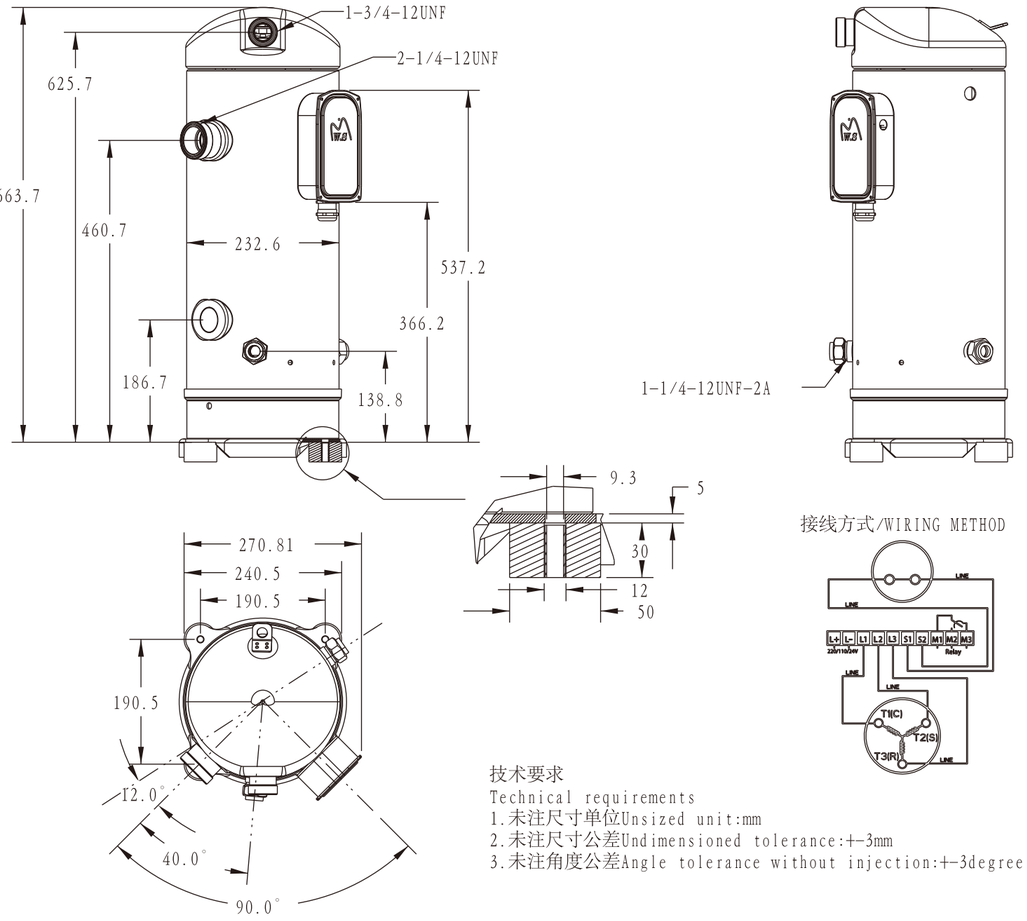


技术要求
Technical requirements
1.未注尺寸单位Unsized unit:mm
2.未注尺寸公差Undimensioned tolerance:+-3mm
3.未注角度公差Angle tolerance without injection:+-3degree



## WW470KB - WW600KB

带喷气增焓机型*EVI*





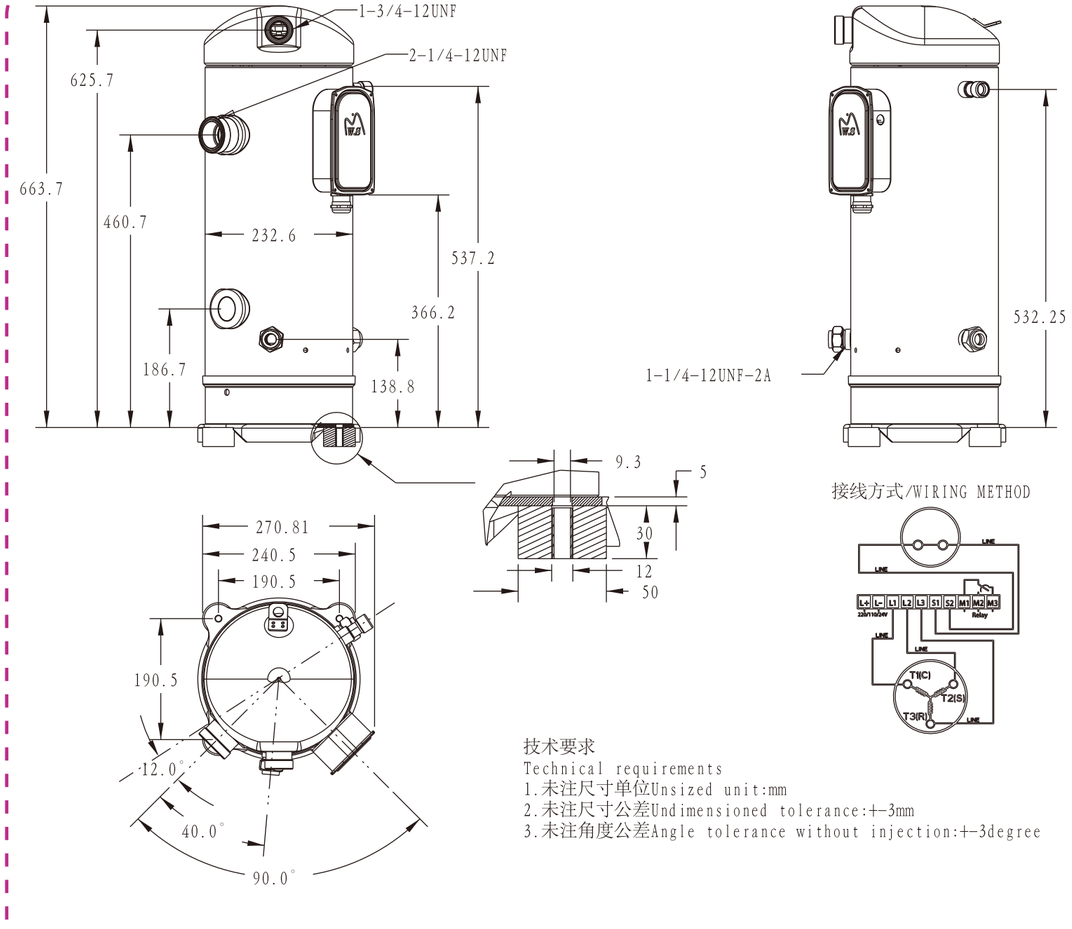


技术要求
Technical requirements
1.未注尺寸单位Unsized unit:mm
2.未注尺寸公差Undimensioned tolerance:+-3mm
3.未注角度公差Angle tolerance without injection:+-3degree

# 接线图

## Wiring Diagram

**WW470KB - WW600KB**

*EVI(WW470KB-WW600KB)*

接线图 WIRING DIAGRAM

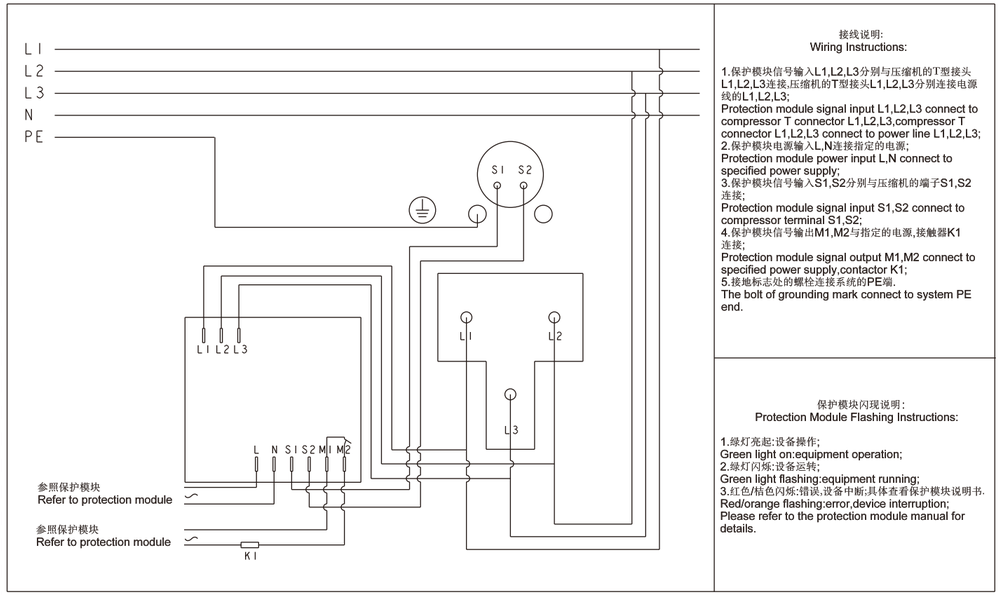


接线说明:
Wiring Instructions:

1.保护模块信号输入L1,L2,L3分别与压缩机的T型接头L1,L2,L3连接,压缩机的T型接头L1,L2,L3分别连接电源线的L1,L2,L3;
Protection module signal input L1,L2,L3 connect to compressor T connector L1,L2,L3,compressor T connector L1,L2,L3 connect to power line L1,L2,L3;
2.保护模块电源输入L,N连接指定的电源;
Protection module power input L,N connect to specified power supply;
3.保护模块信号输入S1,S2分别与压缩机的端子S1,S2连接;
Protection module signal input S1,S2 connect to compressor terminal S1,S2;
4.保护模块信号输出M1,M2与指定的电源,接触器K1连接;
Protection module signal output M1,M2 connect to specified power supply,contactor K1;
5.接地标志处的螺栓连接系统的PE端.
The bolt of grounding mark connect to system PE end.

保护模块闪现说明:
Protection Module Flashing Instructions:

1.绿灯亮起:设备操作;
Green light on:equipment operation;
2.绿灯闪烁:设备运转;
Green light flashing:equipment running;
3.红色/桔色闪烁:错误,设备中断;具体查看保护模块说明书.
Red/orange flashing:error,device interruption;
Please refer to the protection module manual for details.



# 为山® 涡旋压缩机

## WEISHANS SCROLL COMPRESSOR

# 2HP-25HP

致力于为客户提供绿色环保的空调，冷水机，热泵及冷冻冷藏解决方案

We are committed to providing our customers with environmentally friendly air conditioning, chillers, heat pumps, and refrigeration solutions