联系我们 / Contact Us

苏州为山之环境技术有限公司

Suzhou Weishans Climate Technologies Co.,Ltd

公司官网 / Web:www.weishans.com

地址：江苏省苏州市相城区黄埭镇咏春科技园

Address：Yongchun Science and Technology Park, Huangdai Town, Xiangcheng District, Suzhou City, Jiangsu Province

联系人Contact：王先生Mr.Wang:13771888067，李先生Mr.Li:15995875226，陈女士Ms.chen:13640429967，王先生Mr.Wang:18896534978

免责声明

技术数据在印刷前已经校对过，印刷之后有再更新的可能。如有对某一参数确认的需求，请联系苏州为山之环境技术有限公司。为山之对参数中可能存在的差错概不承担任何责任，为山之保留自行改变其产品而不预先通知的权利。

Disclaimer

Our technical data have been checked before printing, but it is possible for data to be updated after printing. If you need to confirm a certain parameter, please contact Suzhou Weishans Climate Technology Co., Ltd. Weishans will not take any responsibilities for any possible errors in the parameters and reserve the right to change its products without prior notice.

Rev:202610

WEISHANS
Climate Technologies
为山 · 涡旋压缩机

WW系列

热泵烘干应用涡旋压缩机

Scroll Compressor for Heat Pump & Stoving Application

R290

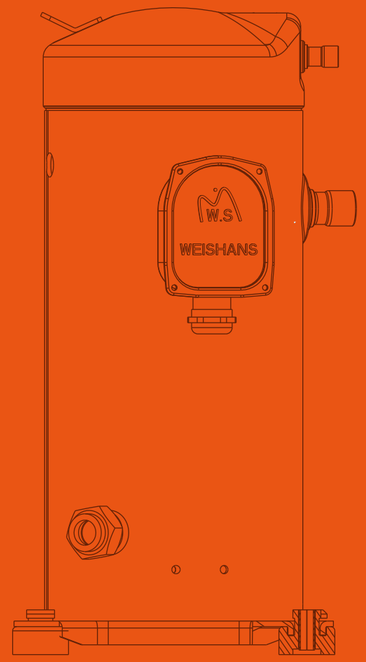

目录Catalog

公司简介 02
About us

命名规则 03
Nomenclature

应用范围 04
Application Range

技术参数 05
Specification

制热量 07
Heating Capacity

外形尺寸 13
Dimensional Information

苏州为山之环境技术有限公司
成立于 2018 年 6 月，是一家专注研发、生产节能环保型涡旋压缩机的创新型高新技术企业。
公司深耕涡旋压缩机核心技术研发，已实现关键技术重大突破，产品广泛适用于工业制冷、商用热水、工业蒸汽、农业烘干、制冷工程、精密空调、轨道交通制冷、转轮除湿、工业余热回收等众多领域。
企业配备先进自动化生产线及高精度检测、加工设备，依托创新生产工艺流程，产品规格覆盖 2 匹至 25 匹，先后通过 CCC、CE、CB、ROHS & REACH、ISO 9001 等多项国内外权威认证。
公司高度重视知识产权布局与保护，拥有多项自主专利技术，先后获评江苏省民营科技企业、国家级高新技术企业等荣誉资质。
面向未来，公司将持续加大科研研发投入，专注为客户提供绿色环保热泵及冷冻压缩机整体解决方案，以降低全球碳排放为企业使命，聚力赋能节能环保产业发展，共建绿色生态家园。

Suzhou Weishans Climate Technology Co., Ltd
Established in June 2018, the company is an innovative high-tech enterprise dedicated to the R&D and manufacturing of energy-efficient and eco-friendly scroll compressors.
The company is deeply committed to the R&D of core scroll compressor technologies, having achieved significant breakthroughs in key technical areas. Its products are widely applicable across numerous fields, including industrial refrigeration, commercial hot water systems, industrial steam generation, agricultural drying, refrigeration engineering, precision air conditioning, rail transit cooling, desiccant dehumidification, and industrial waste heat recovery.
Equipped with advanced automated production lines as well as high-precision testing and processing equipment, and leveraging innovative manufacturing processes, the company offers a product range spanning specifications from 2 to 25 horsepower. Its products have successfully obtained numerous authoritative domestic and international certifications, including CCC, CE, CB, RoHS & REACH, and ISO 9001.
The company places great emphasis on intellectual property strategy and protection; it holds numerous proprietary patented technologies and has successively been recognized with prestigious credentials, such as "Private Scientific and Technological Enterprise of Jiangsu Province" and "National High-tech Enterprise."
Looking toward the future, the company will continue to increase its investment in scientific research and development. It remains focused on providing customers with comprehensive solutions for green, eco-friendly heat pumps and refrigeration compressors. With the corporate mission of reducing global carbon emissions, the company is dedicated to empowering the growth of the energy-saving and environmental protection industry, working together to build a green and sustainable ecological home.

命名规则 Nomenclature

W W 94 K E - T F D - N N X

系列代码 Series Code
W-为山涡旋压缩机系列
Weishan Series

压缩机家族序列代码 Compressor Family Series
R - 空调冷水机应用
Air Conditioning & Chiller

压缩机标称能力代码 Compressor Nominal Capability Code
表示在60Hz，ARI工况下制冷量，单位：Btu/Hr
ARI Operating at 60Hz, Unit:Btu/Hr

能力系数代码 Capacity Multiplier
K*1000

润滑方式代码 Lubrication Oil
M-矿物油*Mineral Oil/ R22*
E-*POE Oil* 脂类油
R407C/R513A
R-*POE Oil* 脂类油/*R32*
P-*POE Oil* 脂类油
R410A/R454B

电机保护方式代码 Motor Protection
F-内置保护器
Internal Protector
W-外置保护器
External Protector

电机相数代码 Motor Phase
P-单相*Single Phase*
T-三相*Three Phase*

电源代码 Power
P-380V 50Hz
T-380V 60Hz
J-220-240V-1 50Hz
D-460V-3 60Hz/380-420V-3 50Hz
V-220V-1 50Hz/208-230V-1 60Hz
5-200-220V-3 50Hz/200-230V-3 60Hz

配置代码 Model Code
1-标准配置
Standard Configuration
X- R290

冷却方式 Cooling Model
N-无配置 *None*

连接代码 Fitting Connection Code
N-无视液镜；焊接口
None and Welding Joint
G-有视液镜；焊接口
Sight Glasses and Welding Joint
S-有视液镜；螺纹口
Sight Glasses and Solenoid Joint

应用范围 Application Range

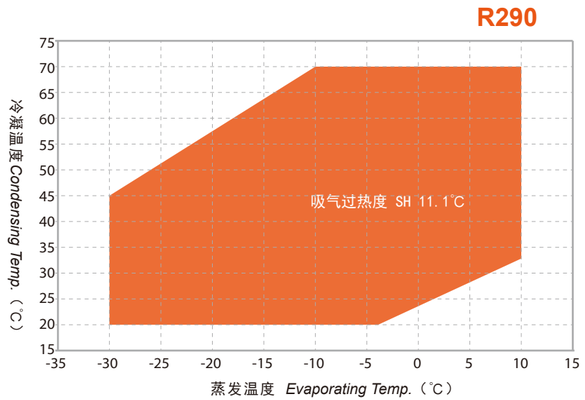

型号 Model		WW24KE-TFD-NNX	WW34KE-TFD-NNX	WW48KE-TFD-NNX	WW61KE-TFD-NNX	WW72KE-TFD-NNX	WW79KE-TFD-NNX	WW94KE-TFD-NNX
电制 Motor Power		380-420V/3~/50Hz or 460V/3~/60Hz						
名义功率 Nominal Power (HP)		2	3	4	5	6	7	8
排量 Displacement (cc/Rev)		32.3	50.6	63.9	84.5	98.9	108	127
制冷剂 Refrigerant		R290						
名义制热量 Nominal Capacity (W)		6212	8690	12523	16212	19117	20548	24594
名义输入功率 Nominal Power (W)		1600	2197	3027	3912	4525	4974	5919
名义工况能效比 COP (W/W)		3.88	3.96	4.14	4.14	4.22	4.13	4.16
名义工况电流 Nominal Operating Current (A)		2.8	3.9	5.4	6.9	8.0	8.8	10.5
堵转电流 LRA (A)		38.8	38.8	38.8	59.3	83.6	83.6	117
最大运行电流 MOC (A)		5.4	7.3	9.4	12.0	14.3	15.6	18.4
曲轴箱加热器功率 Crankcase Heater (W)		70						90
接管尺寸 Fitting ID Size (mm)	排气管Dis.Tube	12.94-13.10						22.37-22.51
	吸气管 Suc. Tube	22.37-22.51						34.97-35.10
外形尺寸 Dimension (mm)	长(L)	244.8				257.01		283.04
	宽(W)	230.5				230.5		240.5
	高(H)	402.55				442.7		522.7
底脚安装尺寸 Mounting Dim.(Dia.) (mm)		190.5x190.5						
润滑油类型 Lubrication Oil		POE						
润滑油初次充注量 Lubrication Oil Initial Charge (L)		1.4	1.4	1.4	1.4	1.8	1.8	3
润滑油重新充注量 Lubrication Oil Recharge (L)		1.2	1.2	1.2	1.2	1.6	1.6	2.8
最大工作压力 Maxium Operating Pressure (MPa)	高压侧 High Pressure Side	3.0						
	低压侧 Low Pressure Side	2.0						
重量 Weight (kg)		28	28	28	31	38	38	66

注：蒸发5. 0˚C, 冷凝55. 0˚C, 过热11. 1K, 过冷8. 3K, 环温35. 0˚C
Note: Evaporating Temperature 5.0˚C, Condensing Temperating 55.0˚C, Superheating 11.1K, Subcooling 8.3K, Ambient Temperating 35.0˚C

型号 Model		WW108KE-TFD-NNX	WW125KE-TFD-NNX	WW138KE-TFD-NNX	WW154KE-TFD-NNX	WW170KE-TFD-NNX	WW250KE-TWD-GNX	WW300KE-TWD-GNX
电制 Motor Power		380-420V/3~/50Hz or 460V/3~/60Hz						
名义功率 Nominal Power (HP)		9	10	12	13	15	20	25
排量 Displacement (cc/Rev)		147.7	166.1	190.8	209	248.9	325	400
制冷剂 Refrigerant		R290						
名义制热量 Nominal Capacity (W)		28788	32631	37198	40816	48870	63812	78538
名义输入功率 Nominal Power (W)		6985	7893	8556	9702	11800	15407	18963
名义工况能效比 COP (W/W)		4.12	4.13	4.35	4.21	4.14	4.14	4.14
名义工况电流 Nominal Operating Current (A)		12.3	13.9	15.1	17.1	20.9	27.2	33.5
堵转电流 LRA (A)		117	117	117	117	117	267.9	304
最大运行电流 MOC (A)		21.3	24.0	27.6	30.2	36.0	47.0	57.8
曲轴箱加热器功率 Crankcase Heater (W)		90						
接管尺寸 Fitting ID Size (mm)	排气管Dis.Tube	22.37-22.51		22.37-22.51			28.81-28.95	
	吸气管 Suc. Tube	34.97-35.10		34.97-35.10			34.97-35.10	
外形尺寸 Dimension (mm)	长(L)	283.04		283.04			270.81	
	宽(W)	240.5		235.5			240.5	
	高(H)	522.7		522.7			663.7	
底脚安装尺寸 Mounting Dim.(Dia.) (mm)		190.5x190.5						
润滑油类型 Lubrication Oil		POE						
润滑油初次充注量 Lubrication Oil Initial Charge (L)		3	3	3.2	3.2	3.2	5	5
润滑油重新充注量 Lubrication Oil Recharge (L)		2.8	2.8	3	3	3	4.8	4.8
最大工作压力 Maxium Operating Pressure (MPa)	高压侧 High Pressure Side	3.0						
	低压侧 Low Pressure Side	2.0						
重量 Weight (kg)		66	66	66	66	66	92	92

注：蒸发5. 0˚C, 冷凝55. 0˚C, 过热11. 1K, 过冷8. 3K, 环温35. 0˚C
Note: Evaporating Temperature 5.0˚C, Condensing Temperating 55.0˚C, Superheating 11.1K, Subcooling 8.3K, Ambient Temperating 35.0˚C

制热量 | Heating Capacity R290

型号Model	项目Item (kW)	Tc\Te	-30℃	-25℃	-20℃	-15℃	-10℃	-5℃	0℃	5℃	10℃
WW24KE-TFD-NNX	Q	70℃					3.87	4.36	4.92	5.56	6.29
	P						1.71	1.78	1.85	1.91	1.95
	Q	65℃					3.99	4.51	5.11	5.78	6.56
	P						1.64	1.71	1.76	1.81	1.85
	Q	60℃				3.62	4.1	4.65	5.28	6	6.83
	P					1.51	1.57	1.62	1.67	1.71	1.74
	Q	55℃			3.25	3.69	4.2	4.78	5.45	6.21	7.09
	P				1.37	1.43	1.48	1.52	1.57	1.6	1.63
	Q	50℃		2.87	3.28	3.75	4.28	4.9	5.61	6.42	7.35
	P			1.24	1.29	1.33	1.38	1.42	1.46	1.49	1.51
	Q	45℃	2.5	2.87	3.3	3.79	4.36	5.01	5.76	6.63	7.61
	P		1.1	1.14	1.19	1.23	1.27	1.31	1.34	1.37	1.4
	Q	40℃	2.47	2.86	3.31	3.83	4.43	5.12	5.92	6.83	7.87
	P		1	1.04	1.07	1.11	1.15	1.19	1.22	1.25	1.28
	Q	35℃	2.43	2.84	3.31	3.86	4.5	5.23	6.07	7.04	8.14
	P		0.88	0.91	0.95	0.98	1.02	1.06	1.09	1.13	1.16
	Q	30℃	2.38	2.81	3.31	3.89	4.56	5.34	6.23	7.25	
	P		0.74	0.77	0.81	0.85	0.88	0.92	0.96	1	
	Q	25℃	2.32	2.77	3.3	3.91	4.62	5.45	6.39		
	P		0.59	0.62	0.66	0.7	0.74	0.78	0.83		
	Q	20℃	2.25	2.72	3.28	3.93	4.69	5.56			
	P		0.42	0.45	0.49	0.54	0.59	0.64			
WW34KE-TFD-NNX	Q	70℃					5.39	6.08	6.87	7.76	8.79
	P						2.34	2.45	2.54	2.62	2.68
	Q	65℃					5.57	6.29	7.13	8.08	9.17
	P						2.25	2.34	2.42	2.49	2.54
	Q	60℃				5.05	5.72	6.49	7.37	8.39	9.55
	P					2.07	2.15	2.22	2.29	2.34	2.39
	Q	55℃			4.52	5.15	5.86	6.67	7.61	8.69	9.92
	P				1.88	1.96	2.03	2.09	2.15	2.2	2.24
	Q	50℃		4	4.57	5.23	5.98	6.85	7.84	8.99	10.29
	P			1.7	1.77	1.83	1.89	1.95	2	2.04	2.08
	Q	45℃	3.47	4.01	4.61	5.3	6.1	7.01	8.07	9.28	10.67
	P		1.51	1.57	1.63	1.69	1.74	1.79	1.84	1.88	1.92
	Q	40℃	3.44	4	4.63	5.36	6.2	7.17	8.29	9.58	11.04
	P		1.37	1.42	1.48	1.53	1.58	1.63	1.67	1.72	1.76
	Q	35℃	3.39	3.97	4.63	5.4	6.3	7.33	8.52	9.88	11.42
	P		1.2	1.25	1.3	1.35	1.4	1.45	1.5	1.55	1.6
	Q	30℃	3.32	3.93	4.63	5.45	6.39	7.48	8.74	10.18	
	P		1.02	1.06	1.11	1.16	1.21	1.27	1.32	1.38	
	Q	25℃	3.24	3.88	4.62	5.48	6.48	7.64	8.97		
	P		0.81	0.85	0.9	0.96	1.01	1.07	1.14		
	Q	20℃	3.15	3.82	4.6	5.52	6.58	7.8			
	P		0.58	0.62	0.68	0.74	0.81	0.88			
WW48KE-TFD-NNX	Q	70℃					7.7	8.69	9.82	11.13	12.63
	P						3.23	3.37	3.5	3.61	3.7
	Q	65℃					7.95	9.01	10.22	11.61	13.2
	P						3.11	3.23	3.33	3.43	3.5
	Q	60℃				7.21	8.19	9.31	10.59	12.07	13.77
	P					2.85	2.96	3.07	3.15	3.23	3.29
	Q	55℃			6.46	7.37	8.4	9.58	10.95	12.52	14.32
	P				2.59	2.7	2.8	2.88	2.96	3.03	3.08
	Q	50℃		5.71	6.55	7.5	8.59	9.85	11.3	12.97	14.88
	P			2.34	2.43	2.53	2.61	2.69	2.75	2.81	2.87
	Q	45℃	4.96	5.73	6.6	7.61	8.77	10.1	11.64	13.41	15.44
	P		2.08	2.16	2.25	2.33	2.4	2.47	2.54	2.59	2.65
	Q	40℃	4.92	5.72	6.64	7.7	8.93	10.35	11.98	13.86	16
	P		1.89	1.96	2.03	2.11	2.17	2.24	2.31	2.37	2.42
	Q	35℃	4.86	5.7	6.67	7.79	9.09	10.59	12.33	14.31	16.57
	P		1.66	1.73	1.79	1.86	1.93	2	2.07	2.14	2.2
	Q	30℃	4.77	5.65	6.68	7.86	9.24	10.84	12.67	14.77	
	P		1.4	1.46	1.53	1.6	1.67	1.75	1.82	1.9	
	Q	25℃	4.67	5.6	6.68	7.94	9.4	11.08	13.02		
	P		1.11	1.17	1.24	1.32	1.4	1.48	1.57		
	Q	20℃	4.56	5.53	6.67	8.01	9.55	11.34			
	P		0.79	0.86	0.93	1.02	1.11	1.21			

注：以上数据基于 11.1K 吸气过热度，8.3K 过冷度
Note: The above data are based on 11.1k supheating and 8.3k subcooling.

Heating Capacity R290 | 制热量

型号Model	项目Item (kW)	Tc\Te	-30℃	-25℃	-20℃	-15℃	-10℃	-5℃	0℃	5℃	10℃
WW61KE-TFD-NNX	Q	70℃					9.96	11.24	12.72	14.41	16.34
	P						4.17	4.36	4.52	4.66	4.78
	Q	65℃					10.29	11.66	13.22	15.02	17.09
	P						4.01	4.17	4.31	4.43	4.52
	Q	60℃				9.33	10.6	12.04	13.71	15.62	17.82
	P					3.68	3.83	3.96	4.08	4.18	4.26
	Q	55℃			8.36	9.53	10.87	12.41	14.18	16.21	18.54
	P				3.35	3.49	3.61	3.73	3.83	3.91	3.98
	Q	50℃		7.39	8.47	9.7	11.12	12.75	14.63	16.79	19.27
	P			3.02	3.15	3.26	3.37	3.47	3.56	3.64	3.7
	Q	45℃	6.42	7.42	8.55	9.85	11.35	13.08	15.08	17.37	19.99
	P		2.69	2.8	2.9	3.01	3.1	3.19	3.28	3.35	3.42
	Q	40℃	6.37	7.41	8.6	9.97	11.56	13.4	15.52	17.95	20.72
	P		2.44	2.53	2.63	2.72	2.81	2.9	2.98	3.06	3.13
	Q	35℃	6.29	7.37	8.63	10.08	11.77	13.72	15.96	18.53	21.46
	P		2.15	2.23	2.32	2.41	2.5	2.58	2.67	2.76	2.84
	Q	30℃	6.18	7.32	8.64	10.18	11.97	14.03	16.41	19.12	
	P		1.81	1.89	1.98	2.07	2.16	2.26	2.35	2.46	
	Q	25℃	6.05	7.25	8.65	10.28	12.17	14.35	16.86		
	P		1.44	1.52	1.61	1.7	1.81	1.91	2.03		
	Q	20℃	5.9	7.17	8.64	10.37	12.37	14.68			
	P		1.02	1.11	1.21	1.32	1.43	1.56			
WW72KE-TFD-NNX	Q	70℃					11.69	13.21	14.95	16.95	19.25
	P						4.82	5.04	5.23	5.39	5.53
	Q	65℃					12.09	13.71	15.56	17.69	20.14
	P						4.64	4.82	4.98	5.12	5.23
	Q	60℃				10.96	12.46	14.17	16.14	18.41	21.01
	P					4.26	4.43	4.58	4.72	4.83	4.92
	Q	55℃			9.82	11.21	12.79	14.61	16.71	19.12	21.88
	P				3.88	4.03	4.18	4.31	4.43	4.52	4.61
	Q	50℃		8.68	9.96	11.41	13.09	15.02	17.25	19.81	22.75
	P			3.49	3.64	3.77	3.9	4.01	4.12	4.21	4.28
	Q	45℃	7.54	8.71	10.05	11.59	13.37	15.42	17.79	20.51	23.61
	P		3.11	3.24	3.36	3.48	3.59	3.69	3.79	3.88	3.96
	Q	40℃	7.48	8.71	10.12	11.75	13.63	15.81	18.32	21.2	24.49
	P		2.82	2.93	3.04	3.15	3.25	3.35	3.45	3.54	3.62
	Q	35℃	7.4	8.68	10.17	11.89	13.89	16.19	18.85	21.9	25.37
	P		2.48	2.58	2.68	2.78	2.89	2.99	3.09	3.19	3.29
	Q	30℃	7.28	8.63	10.2	12.02	14.13	16.58	19.39	22.61	
	P		2.1	2.19	2.29	2.39	2.5	2.61	2.72	2.84	
	Q	25℃	7.13	8.55	10.21	12.14	14.38	16.97	19.94		
	P		1.66	1.76	1.86	1.97	2.09	2.21	2.35		
	Q	20℃	6.97	8.47	10.22	12.26	14.63	17.37			
	P		1.18	1.28	1.4	1.52	1.66	1.81			
WW79KE-TFD-NNX	Q	70℃					12.63	14.26	16.12	18.26	20.72
	P						5.3	5.54	5.75	5.93	6.08
	Q	65℃					13.06	14.78	16.77	19.05	21.66
	P						5.1	5.3	5.48	5.63	5.75
	Q	60℃				11.84	13.44	15.27	17.38	19.81	22.59
	P					4.68	4.87	5.04	5.18	5.31	5.41
	Q	55℃			10.61	12.09	13.78	15.73	17.97	20.55	23.5
	P				4.26	4.44	4.59	4.74	4.86	4.97	5.07
	Q	50℃		9.38	10.74	12.3	14.1	16.16	18.54	21.28	24.41
	P			3.84	4	4.15	4.29	4.41	4.52	4.62	4.71
	Q	45℃	8.14	9.4	10.84	12.49	14.39	16.58	19.11	22.01	25.33
	P		3.41	3.56	3.69	3.82	3.95	4.06	4.17	4.26	4.35
	Q	40℃	8.08	9.39	10.9	12.64	14.66	16.98	19.66	22.74	26.25
	P		3.1	3.22	3.34	3.46	3.57	3.68	3.79	3.89	3.98
	Q	35℃	7.97	9.35	10.94	12.78	14.91	17.38	20.22	23.48	27.19
	P		2.73	2.84	2.95	3.06	3.17	3.29	3.4	3.51	3.62
	Q	30℃	7.83	9.28	10.96	12.9	15.16	17.78	20.78	24.23	
	P		2.3	2.41	2.51	2.63	2.75	2.87	2.99	3.12	
	Q	25℃	7.67	9.19	10.96	13.02	15.41	18.18	21.36		
	P		1.83	1.93	2.04	2.16	2.3	2.43	2.58		
	Q	20℃	7.48	9.08	10.95	13.13	15.67	18.6			
	P		1.3	1.41	1.54	1.67	1.82	1.98			

注：以上数据基于 11.1K 吸气过热度，8.3K 过冷度
Note: The above data are based on 11.1k supheating and 8.3k subcooling.

制热量 | Heating Capacity R290

型号Model	项目Item (kW)	Tc\Te	-30℃	-25℃	-20℃	-15℃	-10℃	-5℃	0℃	5℃	10℃
WW94KE-TFD-NNX	Q	70℃					15.1	17.05	19.28	21.85	24.79
	P						6.31	6.59	6.84	7.05	7.23
	Q	65℃					15.61	17.68	20.06	22.79	25.92
	P						6.07	6.31	6.52	6.7	6.84
	Q	60℃				14.15	16.07	18.27	20.79	23.7	27.03
	P					5.57	5.79	5.99	6.17	6.32	6.44
	Q	55℃			12.68	14.45	16.48	18.82	21.5	24.59	28.13
	P				5.07	5.28	5.47	5.64	5.79	5.92	6.03
	Q	50℃		11.21	12.85	14.71	16.86	19.34	22.2	25.48	29.23
	P			4.57	4.76	4.94	5.1	5.25	5.38	5.5	5.6
	Q	45℃	9.73	11.24	12.96	14.94	17.21	19.84	22.87	26.35	30.33
	P		4.06	4.23	4.39	4.55	4.69	4.83	4.96	5.07	5.17
	Q	40℃	9.66	11.23	13.04	15.13	17.54	20.33	23.54	27.23	31.44
	P		3.69	3.83	3.98	4.12	4.25	4.38	4.51	4.63	4.74
	Q	35℃	9.53	11.19	13.09	15.3	17.85	20.81	24.22	28.12	32.57
	P		3.25	3.38	3.51	3.64	3.78	3.91	4.04	4.18	4.3
	Q	30℃	9.37	11.1	13.11	15.45	18.16	21.29	24.9	29.02	
	P		2.74	2.86	2.99	3.13	3.27	3.41	3.56	3.72	
	Q	25℃	9.18	11	13.12	15.59	18.46	21.78	25.59		
	P		2.17	2.3	2.43	2.58	2.73	2.9	3.07		
	Q	20℃	8.95	10.87	13.12	15.73	18.77	22.28			
	P		1.55	1.68	1.83	1.99	2.17	2.36			
WW108KE-TFD-NNX	Q	70℃					17.71	19.99	22.6	25.59	29.03
	P						7.44	7.78	8.07	8.32	8.53
	Q	65℃					18.3	20.72	23.5	26.69	30.35
	P						7.17	7.45	7.69	7.9	8.08
	Q	60℃				16.59	18.83	21.4	24.35	27.75	31.64
	P					6.57	6.84	7.07	7.28	7.46	7.6
	Q	55℃			14.87	16.94	19.31	22.04	25.18	28.79	32.92
	P				5.98	6.23	6.45	6.65	6.83	6.99	7.11
	Q	50℃		13.14	15.06	17.24	19.75	22.65	25.98	29.81	34.2
	P			5.39	5.62	5.83	6.02	6.2	6.35	6.49	6.61
	Q	45℃	11.41	13.18	15.19	17.5	20.16	23.23	26.77	30.83	35.48
	P		4.8	4.99	5.19	5.37	5.54	5.7	5.85	5.99	6.11
	Q	40℃	11.32	13.16	15.28	17.71	20.53	23.79	27.54	31.85	36.77
	P		4.35	4.52	4.69	4.86	5.02	5.17	5.32	5.46	5.59
	Q	35℃	11.17	13.1	15.33	17.9	20.89	24.35	28.32	32.88	38.07
	P		3.83	3.98	4.14	4.3	4.46	4.61	4.77	4.93	5.08
	Q	30℃	10.98	13	15.35	18.08	21.24	24.9	29.11	33.93	
	P		3.23	3.38	3.53	3.69	3.86	4.03	4.2	4.38	
	Q	25℃	10.74	12.87	15.35	18.24	21.59	25.46	29.92		
	P		2.57	2.71	2.87	3.04	3.22	3.42	3.62		
	Q	20℃	10.47	12.72	15.34	18.39	21.94	26.04			
	P		1.83	1.98	2.16	2.35	2.56	2.79			
WW125KE-TFD-NNX	Q	70℃					20.06	22.64	25.6	29	32.9
	P						8.41	8.79	9.12	9.4	9.64
	Q	65℃					20.73	23.47	26.62	30.24	34.4
	P						8.1	8.42	8.69	8.93	9.13
	Q	60℃				18.79	21.34	24.25	27.6	31.45	35.87
	P					7.43	7.72	7.99	8.23	8.42	8.59
	Q	55℃			16.84	19.19	21.88	24.98	28.54	32.63	37.32
	P				6.76	7.04	7.29	7.52	7.72	7.89	8.04
	Q	50℃		14.89	17.06	19.54	22.38	25.67	29.45	33.8	38.77
	P			6.1	6.35	6.58	6.8	7	7.18	7.34	7.47
	Q	45℃	12.93	14.93	17.21	19.83	22.84	26.33	30.34	34.95	40.22
	P		5.42	5.64	5.86	6.07	6.26	6.44	6.61	6.76	6.9
	Q	40℃	12.82	14.92	17.31	20.08	23.27	26.97	31.23	36.11	41.69
	P		4.92	5.11	5.3	5.49	5.67	5.85	6.01	6.17	6.32
	Q	35℃	12.66	14.85	17.37	20.29	23.68	27.6	32.11	37.28	43.18
	P		4.33	4.5	4.68	4.86	5.03	5.21	5.39	5.57	5.74
	Q	30℃	12.44	14.73	17.4	20.49	24.08	28.23	33.01	38.48	
	P		3.66	3.82	3.99	4.17	4.36	4.55	4.75	4.95	
	Q	25℃	12.17	14.59	17.4	20.68	24.48	28.87	33.93		
	P		2.9	3.06	3.24	3.43	3.64	3.86	4.09		
	Q	20℃	11.88	14.42	17.39	20.86	24.88	29.53			
	P		2.07	2.24	2.44	2.65	2.89	3.15			

注：以上数据基于 11.1K 吸气过热度，8.3K 过冷度
Note: The above data are based on 11.1k supheating and 8.3k subcooling.

Heating Capacity R290 | 制热量

型号Model	项目Item (kW)	Tc\Te	-30℃	-25℃	-20℃	-15℃	-10℃	-5℃	0℃	5℃	10℃
WW138KE-TFD-NNX	Q	70℃					22.6	25.57	28.97	32.88	37.38
	P						9.12	9.53	9.89	10.19	10.45
	Q	65℃					23.4	26.56	30.18	34.36	39.15
	P						8.78	9.12	9.42	9.68	9.89
	Q	60℃				21.21	24.13	27.49	31.35	35.79	40.89
	P					8.05	8.37	8.66	8.92	9.13	9.31
	Q	55℃			19	21.7	24.8	28.36	32.47	37.2	42.62
	P				7.33	7.63	7.9	8.15	8.37	8.56	8.71
	Q	50℃		16.79	19.28	22.13	25.41	29.2	33.57	38.59	44.34
	P			6.61	6.88	7.14	7.37	7.59	7.78	7.95	8.1
	Q	45℃	14.57	16.87	19.49	22.51	25.99	30.01	34.64	39.97	46.06
	P		5.87	6.12	6.35	6.58	6.79	6.98	7.16	7.33	7.48
	Q	40℃	14.49	16.89	19.65	22.84	26.53	30.79	35.71	41.36	47.8
	P		5.33	5.54	5.75	5.95	6.15	6.34	6.52	6.69	6.85
	Q	35℃	14.34	16.86	19.77	23.14	27.05	31.57	36.78	42.76	49.57
	P		4.69	4.88	5.07	5.26	5.46	5.65	5.84	6.04	6.22
	Q	30℃	14.13	16.78	19.85	23.42	27.56	32.35	37.87	44.18	
	P		3.96	4.14	4.32	4.52	4.72	4.93	5.15	5.37	
	Q	25℃	13.88	16.66	19.91	23.69	28.07	33.15	38.98		
	P		3.14	3.32	3.51	3.72	3.95	4.19	4.44		
	Q	20℃	13.6	16.53	19.96	23.95	28.6	33.96			
	P		2.24	2.43	2.64	2.88	3.14	3.41			
WW154KE-TFD-NNX	Q	70℃					24.98	28.23	31.94	36.21	41.11
	P						10.34	10.8	11.21	11.56	11.85
	Q	65℃					25.84	29.28	33.24	37.78	43
	P						9.96	10.34	10.69	10.98	11.22
	Q	60℃				23.43	26.61	30.27	34.48	39.32	44.87
	P					9.13	9.5	9.82	10.11	10.36	10.56
	Q	55℃			20.99	23.94	27.32	31.2	35.67	40.82	46.71
	P				8.31	8.65	8.96	9.24	9.49	9.7	9.88
	Q	50℃		18.55	21.27	24.38	27.96	32.08	36.83	42.3	48.55
	P			7.49	7.8	8.09	8.36	8.61	8.83	9.02	9.19
	Q	45℃	16.1	18.62	21.48	24.76	28.55	32.93	37.97	43.77	50.39
	P		6.66	6.94	7.2	7.46	7.7	7.92	8.12	8.31	8.48
	Q	40℃	15.99	18.61	21.62	25.09	29.11	33.75	39.1	45.24	52.25
	P		6.05	6.28	6.52	6.75	6.97	7.18	7.39	7.59	7.77
	Q	35℃	15.8	18.54	21.71	25.39	29.64	34.57	40.24	46.73	54.14
	P		5.32	5.53	5.75	5.97	6.19	6.41	6.63	6.84	7.06
	Q	30℃	15.54	18.42	21.77	25.65	30.16	35.38	41.38	48.25	
	P		4.49	4.69	4.9	5.13	5.36	5.6	5.84	6.09	
	Q	25℃	15.23	18.26	21.79	25.91	30.68	36.21	42.55		
	P		3.56	3.76	3.98	4.22	4.48	4.75	5.03		
	Q	20℃	14.88	18.07	21.8	26.16	31.22	37.06			
	P		2.54	2.75	3	3.26	3.56	3.87			
WW170KE-TFD-NNX	Q	70℃					30.02	33.9	38.33	43.43	49.27
	P						12.57	13.14	13.63	14.06	14.41
	Q	65℃					31.03	35.15	39.87	45.29	51.51
	P						12.11	12.58	13	13.35	13.64
	Q	60℃				28.14	31.94	36.31	41.33	47.1	53.72
	P					11.1	11.55	11.95	12.3	12.59	12.84
	Q	55℃			25.22	28.74	32.77	37.4	42.74	48.87	55.9
	P				10.11	10.52	10.9	11.24	11.54	11.8	12.02
	Q	50℃		22.29	25.54	29.25	33.52	38.44	44.1	50.62	58.07
	P			9.11	9.49	9.84	10.17	10.47	10.73	10.97	11.17
	Q	45℃	19.35	22.36	25.77	29.69	34.21	39.43	45.44	52.35	60.25
	P		8.1	8.44	8.76	9.07	9.36	9.63	9.88	10.11	10.31
	Q	40℃	19.2	22.33	25.92	30.06	34.86	40.39	46.77	54.09	62.45
	P		7.35	7.64	7.93	8.2	8.48	8.74	8.99	9.23	9.45
	Q	35℃	18.95	22.23	26.01	30.39	35.47	41.34	48.1	55.85	64.68
	P		6.47	6.73	6.99	7.26	7.53	7.79	8.06	8.32	8.58
	Q	30℃	18.63	22.07	26.06	30.69	36.07	42.29	49.45	57.64	
	P		5.46	5.71	5.96	6.23	6.51	6.8	7.1	7.41	
	Q	25℃	18.23	21.85	26.06	30.97	36.67	43.26	50.83		
	P		4.34	4.58	4.85	5.13	5.45	5.77	6.12		
	Q	20℃	17.79	21.6	26.05	31.25	37.28	44.25			
	P		3.09	3.35	3.64	3.97	4.32	4.71			

注：以上数据基于 11.1K 吸气过热度，8.3K 过冷度
Note: The above data are based on 11.1k supheating and 8.3k subcooling.

制热量 | Heating Capacity R290

型号Model	项目Item (kW)	Tc\Te	-30℃	-25℃	-20℃	-15℃	-10℃	-5℃	0℃	5℃	10℃
WW250KE-TWD-GNX	Q	70℃					39.2	44.26	50.05	56.7	64.34
	P						16.42	17.15	17.8	18.36	18.82
	Q	65℃					40.52	45.89	52.05	59.14	67.26
	P						15.81	16.43	16.97	17.43	17.81
	Q	60℃				36.74	41.71	47.41	53.96	61.5	70.14
	P					14.5	15.08	15.6	16.06	16.45	16.77
	Q	55℃			32.93	37.52	42.79	48.84	55.8	63.81	72.99
	P				13.2	13.74	14.23	14.68	15.07	15.41	15.69
	Q	50℃		29.1	33.35	38.19	43.76	50.19	57.59	66.09	75.83
	P			11.9	12.39	12.85	13.28	13.67	14.02	14.32	14.59
	Q	45℃	25.27	29.19	33.65	38.76	44.67	51.48	59.34	68.36	78.67
	P		10.58	11.02	11.44	11.84	12.22	12.57	12.9	13.2	13.47
	Q	40℃	25.07	29.16	33.85	39.26	45.51	52.74	61.07	70.63	81.54
	P		9.6	9.98	10.35	10.71	11.07	11.41	11.74	12.05	12.34
	Q	35℃	24.75	29.03	33.97	39.69	46.32	53.98	62.81	72.93	84.46
	P		8.45	8.79	9.13	9.48	9.83	10.18	10.53	10.87	11.2
	Q	30℃	24.32	28.81	34.02	40.08	47.1	55.22	64.57	75.26	
	P		7.14	7.45	7.79	8.14	8.51	8.89	9.27	9.67	
	Q	25℃	23.81	28.53	34.03	40.44	47.88	56.48	66.36		
	P		5.66	5.98	6.33	6.7	7.11	7.54	7.99		
	Q	20℃	23.23	28.2	34.02	40.8	48.68	57.77			
	P		4.03	4.37	4.76	5.18	5.65	6.15			
WW300KE-TWD-GNX	Q	70℃					48.25	54.48	61.61	69.79	79.18
	P						20.21	21.11	21.91	22.59	23.16
	Q	65℃					49.87	56.48	64.07	72.78	82.79
	P						19.46	20.22	20.88	21.45	21.92
	Q	60℃				45.22	51.34	58.35	66.42	75.69	86.33
	P					17.84	18.56	19.2	19.76	20.24	20.64
	Q	55℃			40.53	46.18	52.66	60.11	68.68	78.54	89.83
	P				16.24	16.91	17.52	18.06	18.55	18.96	19.31
	Q	50℃		35.81	41.04	47.01	53.86	61.77	70.88	81.35	93.33
	P			14.64	15.25	15.82	16.34	16.82	17.25	17.63	17.95
	Q	45℃	31.1	35.93	41.41	47.71	54.98	63.36	73.03	84.14	96.83
	P		13.02	13.56	14.08	14.57	15.04	15.48	15.88	16.25	16.58
	Q	40℃	30.86	35.89	41.66	48.31	56.01	64.91	75.17	86.93	100.36
	P		11.82	12.28	12.74	13.19	13.62	14.04	14.45	14.83	15.18
	Q	35℃	30.46	35.73	41.8	48.85	57.01	66.44	77.31	89.76	103.95
	P		10.4	10.81	11.24	11.66	12.1	12.53	12.95	13.38	13.79
	Q	30℃	29.94	35.46	41.87	49.32	57.97	67.97	79.47	92.63	
	P		8.78	9.17	9.58	10.02	10.47	10.94	11.41	11.9	
	Q	25℃	29.3	35.11	41.89	49.77	58.93	69.51	81.68		
	P		6.97	7.36	7.79	8.25	8.75	9.28	9.84		
	Q	20℃	28.59	34.71	41.87	50.22	59.91	71.11			
	P		4.97	5.38	5.86	6.38	6.95	7.57			

注：以上数据基于 11.1K 吸气过热度，8.3K 过冷度
Note: The above data are based on 11.1k supheating and 8.3k subcooling.

为山® 涡旋压缩机
WEISHANS SCROLL COMPRESSOR

2HP-25HP

致力于为客户提供绿色环保的空调，冷水机，热泵及冷冻冷藏解决方案
We are committed to providing our customers with environmentally friendly air conditioning, chillers, heat pumps, and refrigeration solutions

WEISHANS Climate Technologies 为山 · 涡旋压缩机

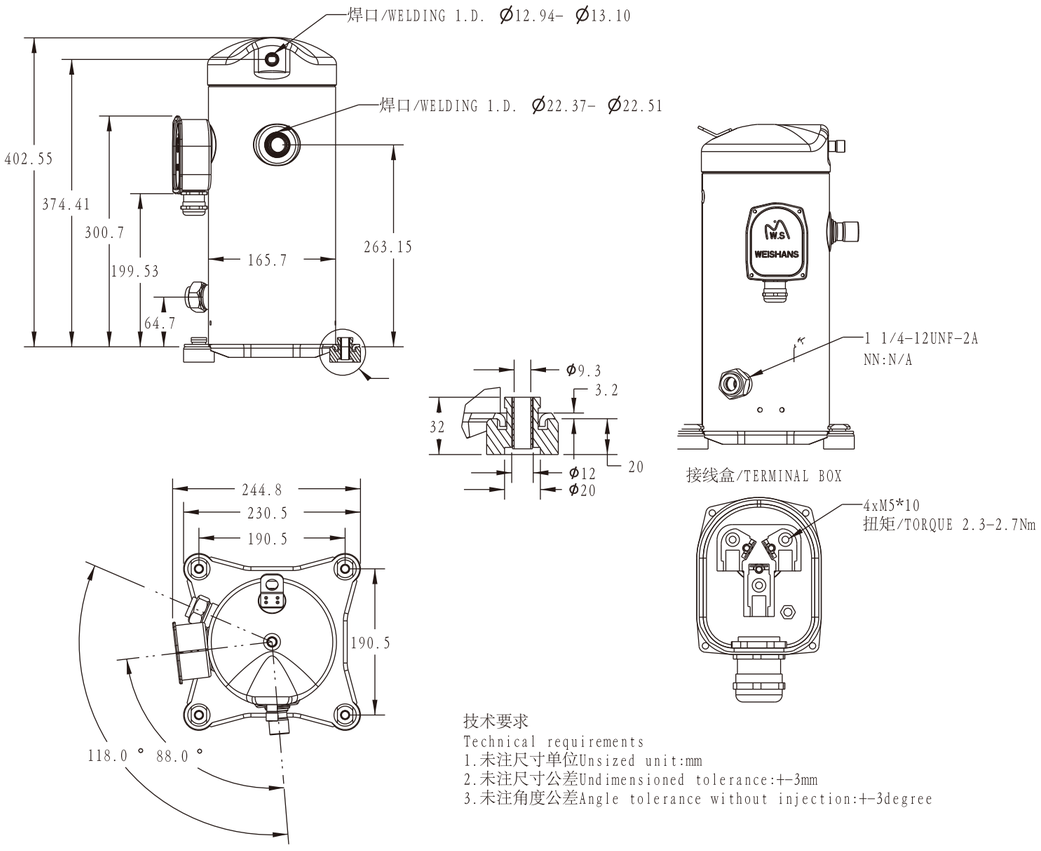

技术要求
Technical requirements
1.未注尺寸单位Unsized unit:mm
2.未注尺寸公差Undimensioned tolerance:+-3mm
3.未注角度公差Angle tolerance without injection:+-3degree

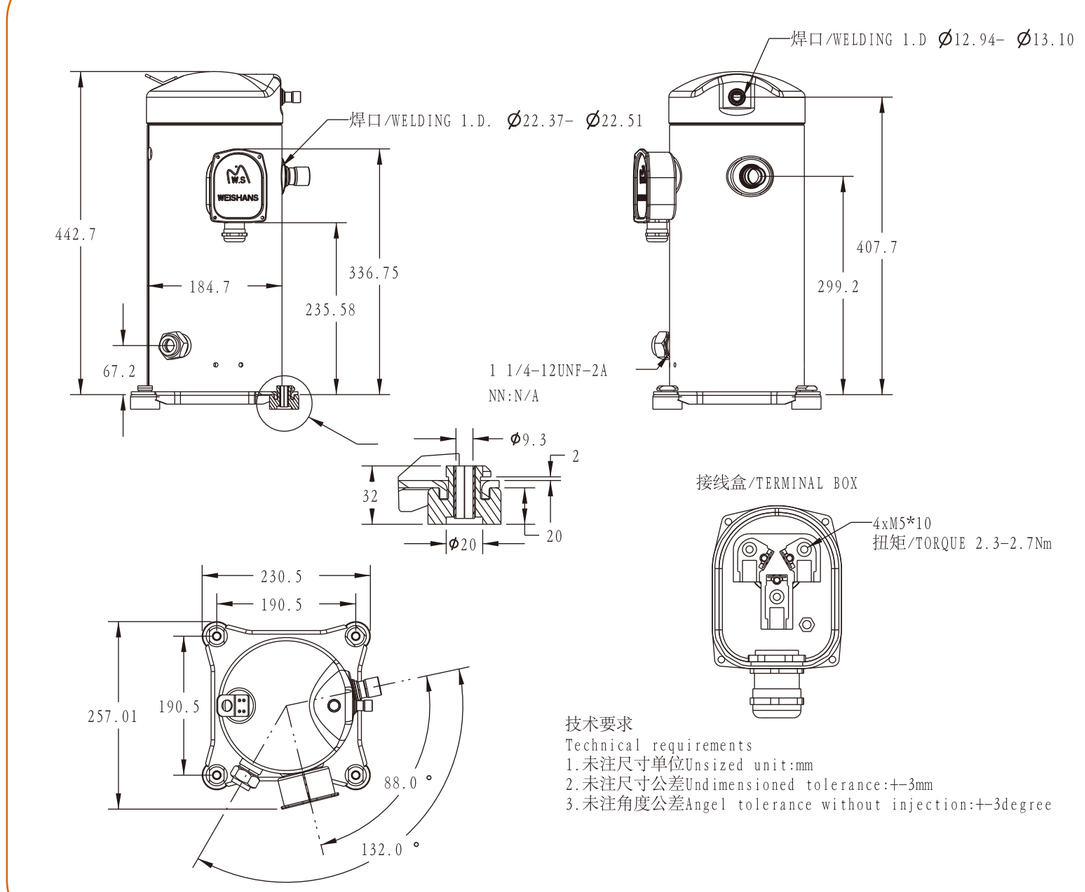

技术要求
Technical requirements
1.未注尺寸单位Unsized unit:mm
2.未注尺寸公差Undimensioned tolerance:+-3mm
3.未注角度公差Angel tolerance without injection:+-3degree

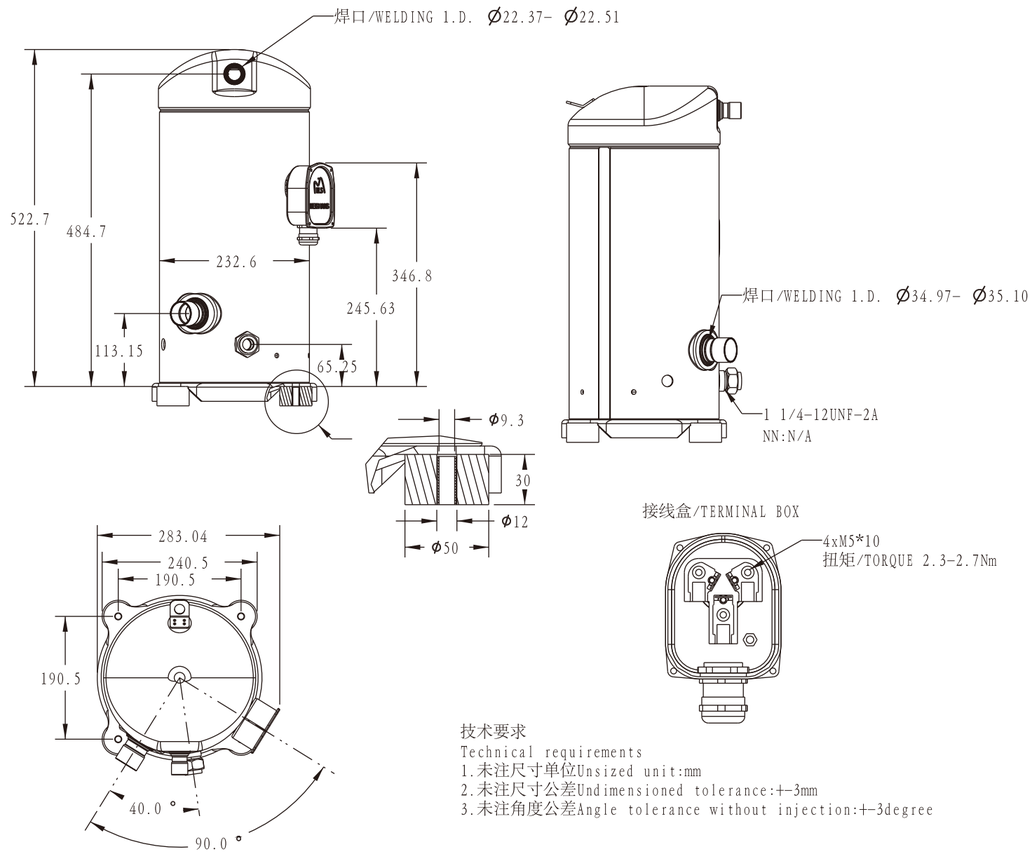

技术要求
Technical requirements
1.未注尺寸单位Unsized unit:mm
2.未注尺寸公差Undimensioned tolerance:+-3mm
3.未注角度公差Angle tolerance without injection:+-3degree

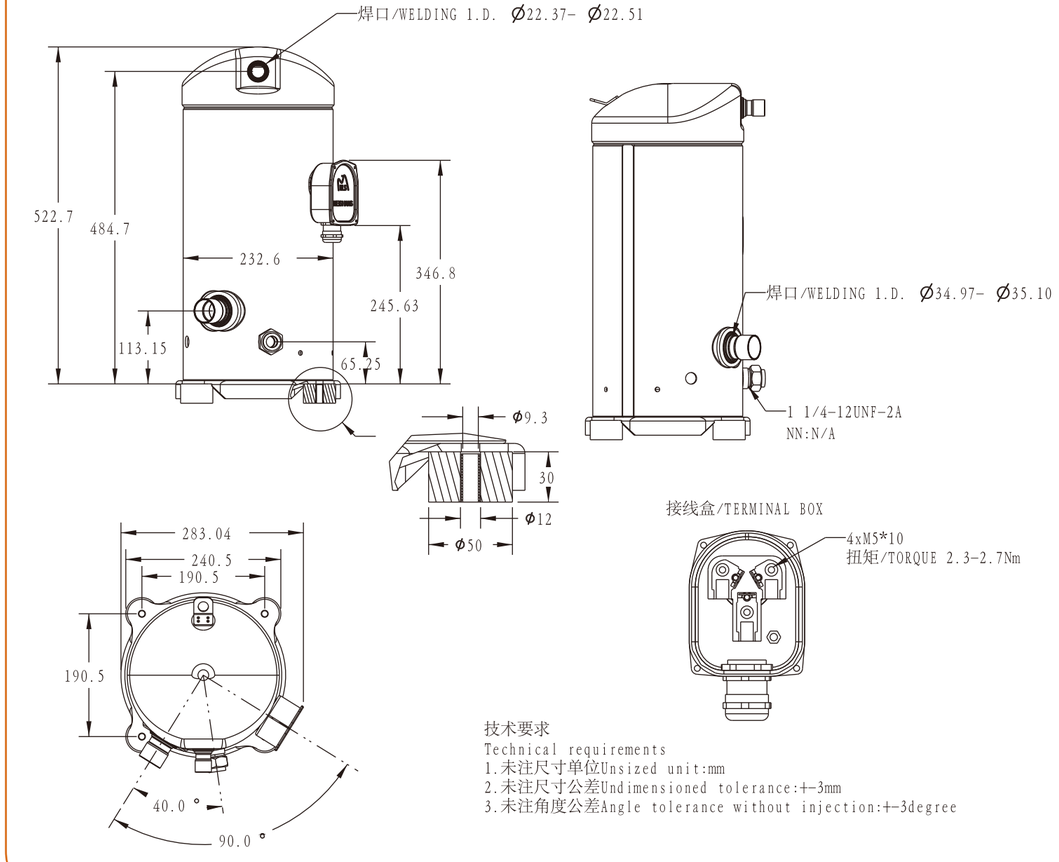

技术要求
Technical requirements
1.未注尺寸单位Unsized unit:mm
2.未注尺寸公差Undimensioned tolerance:+-3mm
3.未注角度公差Angle tolerance without injection:+-3degree

外形尺寸 | Dimensional
WW250KE-WW300KE

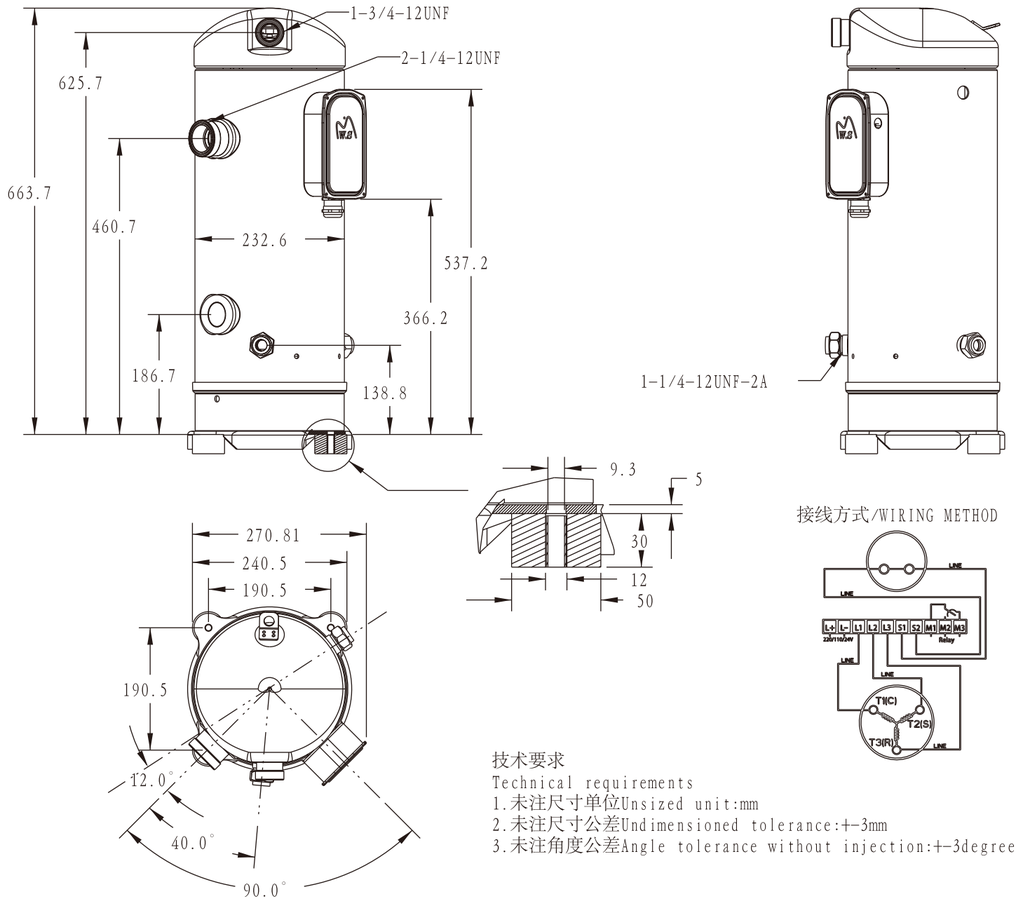

接线方式/WIRING METHOD

技术要求
Technical requirements
1.未注尺寸单位Unsized unit:mm
2.未注尺寸公差Undimensioned tolerance:+-3mm
3.未注角度公差Angle tolerance without injection:+-3degree

接线图示 | Wiring Diagram
WR250KE-WR310KE

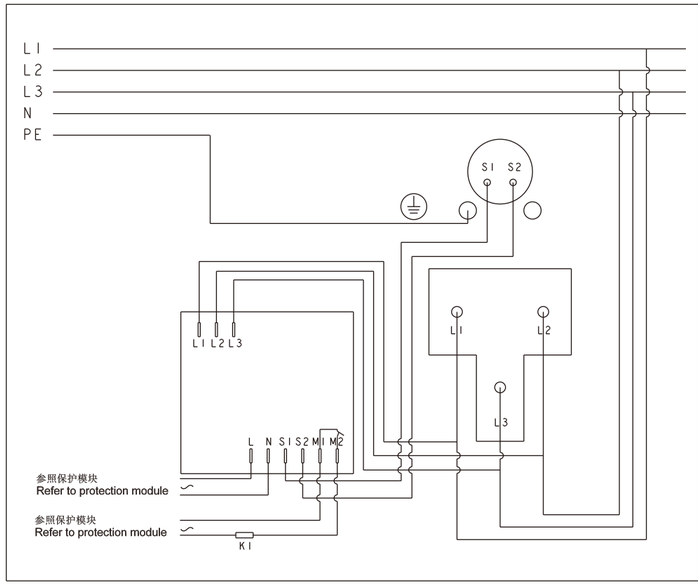

接线说明:
Wiring Instructions:

1.保护模块信号输入L1,L2,L3分别与压缩机的T型接头L1,L2,L3连接,压缩机的T型接头L1,L2,L3分别连接电源线的L1,L2,L3;
Protection module signal input L1,L2,L3 connect to compressor T connector L1,L2,L3,compressor T connector L1,L2,L3 connect to power line L1,L2,L3;
2.保护模块电源输入L,N连接指定的电源;
Protection module power input L,N connect to specified power supply;
3.保护模块信号输入S1,S2分别与压缩机的端子S1,S2连接;
Protection module signal input S1,S2 connect to compressor terminal S1,S2;
4.保护模块信号输出M1,M2与指定的电源,接触器K1连接;
Protection module signal output M1,M2 connect to specified power supply,contactor K1;
5.接地标志处的螺栓连接系统的PE端.
The bolt of grounding mark connect to system PE end.

保护模块闪现说明:
Protection Module Flashing Instructions:

1.绿灯亮起:设备操作;
Green light on:equipment operation;
2.绿灯闪烁:设备运转;
Green light flashing:equipment running;
3.红色/桔色闪烁:错误,设备中断;具体查看保护模块说明书.
Red/orange flashing:error,device interruption;
Please refer to the protection module manual for details.